WTC
Drawing Book 7

Chapters 1-5

SKILLING, HELLE, CHRISTIANSEN, ROBERTSON

PROJECT THE WORLD TRADE CENTER — TITLE 7 WTCI-24-LERA FLOOR PANELS — DATE

REVISIONS

PRINTED 5/18/73

7-AB0-*	0	5/18/73	7-AB2-	1	5/ 1/69	7-AB3-	29	10/ 4/68	7-AB4-	2.1	1/ 6/69	7-AB4-	28.1	7/22/68
7- 80-	0	5/ 5/73	7-AB2-	2	7/22/68	7-AB3-	30	10/ 4/68	7-AB4-	2.2	1/ 6/69	7-AB4-	29	1/ 3/68
7-AB0-	0.*	5/ 8/73	7-AB2-	3	7/22/68	7-AB3-	31	10/ 4/68	7-AB4-	2.3	1/ 6/69	7-AB4-	30	4/ 1/68
7-AB1-	1	5/ 1/69	7-AB2-	4	7/22/68	7-AB3-	32	10/ 4/68	7-AB4-	2.4	1/ 6/69	7-AB4-	31	4/ 1/68
7-AB1-	2	7/22/68	7-AB2-	5	7/22/68	7-AB3-	33	10/ 4/68	7-AB4-	3	10/15/68	7-AB4-	31.1	4/ 1/68
7-AB1-	3	7/22/68	7-AB2-	6	7/22/68	7-AB3-	34	10/ 4/68	7-AB4-	3.1	1/ 3/68	7-AB4-	31.2	1/20/69
7-AB1-	4	7/22/68	7-AB2-	7	7/22/68	7-AB3-	35	10/ 4/68	7-AB4-	4	10/15/68	7-AB4-	32	4/ 1/68
7-AB1-	5	10/15/68	7-AB2-	8	7/22/68	7-AB3-	36	10/ 4/68	7-AB4-	5	7/22/68	7-AB4-	32.1	4/ 1/68
7-AB1-	6	7/22/68	7-AB2-	9	1/ 6/69	7-AB3-	37	10/ 4/68	7-AB4-	6	10/15/68	7-AB4-	33	4/ 1/68
7-AB1-	7	7/22/68	7-AB2-	10	7/22/68	7-AB3-	38	10/ 4/68	7-AB4-	7	1/ 3/68	7-AB4-	34	10/15/68
7-AB1-	8	7/22/68	7-AB2-	11	7/22/68	7-AB3-	39	10/ 4/68	7-AB4-	8	7/22/68	7-AB4-	34.1	1/20/69
7-AB1-	9	7/22/68	7-AB2-	12	10/ 4/68	7-AB3-	40	10/ 4/68	7-AB4-	9	7/22/68	7-AB4-	35	10/15/68
7-AB1-	10	7/22/68	7-AB2-	13	10/ 4/68	7-AB3-	41	1/ 6/69	7-AB4-	10	12/20/68	7-AB4-	36	10/15/68
7-AB1-	11	7/22/68	7-AB2-	14	10/ 4/68	7-AB3-	42	1/ 6/69	7-AB4-	11	7/22/68	7-AB4-	37	10/15/68
7-AB1-	12	7/22/68	7-AB2-	15	10/ 4/68	7-AB3-	43	1/ 6/69	7-AB4-	11.1	7/22/68	7-AB4-	38	10/15/68
7-AB1-	13	10/ 4/68	7-AB2-	16	1/ 6/69	7-AB3-	44	1/ 6/69	7-AB4-	11.2	7/22/68	7-AB4-	38.1	10/15/68
7-AB1-	14	10/ 4/68	7-AB2-	17	10/ 4/68	7-AB3-	45	1/ 6/69	7-AB4-	11.3	7/22/68	7-AB4-	38.2	10/15/68
7-AB1-	15	10/ 4/68	7-AB2-	18	10/ 4/68	7-AB3-	46	1/ 6/69	7-AB4-	12	7/22/68	7-AB4-	38.3	1/20/69
7-AB1-	16	10/ 4/68	7-AB2-	19	1/ 6/69	7-AB3-	47	1/ 6/69	7-AB4-	13	7/22/68	7-AB4-	39	7/22/68
7-AB1-	17	10/ 4/68	7-AB2-	20	1/ 6/69	7-AB3-	48	1/ 6/69	7-AB4-	13.1	7/22/68	7-AB4-	40	7/22/68
7-AB1-	18	10/ 4/68				7-AB3-	49	1/ 6/69	7-AB4-	13.2	10/15/68	7-AB4-	41	7/22/68
7-AB1-	19	10/ 4/68				7-AB3-	50	1/ 6/69	7-AB4-	14	10/15/68	7-AB4-	41.1	7/22/68
7-AB1-	20	10/ 4/68	7-AB3-	1	5/ 1/69	7-AB3-	51	1/ 6/69	7-AB4-	14.1	10/15/68	7-AB4-	42	10/15/68
7-AB1-	21	10/ 4/68	7-AB3-	2	1/ 3/68	7-AB3-	52	1/ 6/69	7-AB4-	15	7/22/68	7-AB4-	42.1	10/15/68
7-AB1-	22	10/ 4/68	7-AB3-	3	10/15/68	7-AB3-	53	1/ 6/69	7-AB4-	15.1	10/ 4/68	7-AB4-	43	7/22/68
7-AB1-	23	10/ 4/68	7-AB3-	4	10/15/68	7-AB3-	54	1/ 6/69	7-AB4-	15.2	10/ 4/68	7-AB4-	44	1/ 3/68
7-AB1-	24	1/ 6/69	7-AB3-	5	10/15/68	7-AB3-	55	1/ 6/69	7-AB4-	16	7/22/68	7-AB4-	45	12/20/68
7-AB1-	25	1/ 6/69	7-AB3-	6	10/15/68	7-AB3-	56	1/ 6/69	7-AB4-	17	10/ 4/68	7-AB4-	45.1	11/25/68
7-AB1-	26	1/ 6/69	7-AB3-	7	10/15/68	7-AB3-	57	1/ 6/69	7-AB4-	17.1	10/ 4/68	7-AB4-	46	10/15/68
7-AB1-	27	1/ 6/69	7-AB3-	8	10/15/68	7-AB3-	58	1/ 6/69	7-AB4-	17.2	12/20/68	7-AB4-	46.1	7/22/68
7-AB1-	28	1/ 6/69	7-AB3-	9	10/15/68	7-AB3-	59	1/ 6/69	7-AB4-	17.3	7/28/70	7-AB4-	47	7/22/68
7-AB1-	29	1/ 6/69	7-AB3-	10	10/15/68	7-AB3-	60	1/ 6/69	7-AB4-	17.4	10/ 4/68	7-AB4-	47.1	10/15/68
7-AB1-	30	1/ 6/69	7-AB3-	11	10/15/68	7-AB3-	61	1/ 6/69	7-AB4-	17.5	10/ 4/68	7-AB4-	48	1/ 3/68
7-AB1-	31	1/ 6/69	7-AB3-	12	10/15/68	7-AB3-	62	1/20/69	7-AB4-	17.6	10/ 4/68	7-AB4-	49	7/22/68
7-AB1-	32	1/ 6/69	7-AB3-	13	10/15/68	7-AB3-	63	1/20/69	7-AB4-	17.7	10/ 4/68	7-AB4-	49.1	10/15/68
7-AB1-	33	1/ 6/69	7-AB3-	14	10/15/68	7-AB3-	70	11/25/68	7-AB4-	17.8	8/15/68	7-AB4-	49.2	10/ 4/68
7-AB1-	34	1/ 6/69	7-AB3-	15	7/22/68	7-AB3-	71	11/25/68	7-AB4-	18	1/ 6/69	7-AB4-	50	8/ 1/68
7-AB1-	35	1/ 6/69	7-AB3-	16	7/22/68	7-AB3-	72	11/25/68	7-AB4-	18.1	7/22/68	7-AB4-	51	8/ 1/68
7-AB1-	36	1/ 6/69	7-AB3-	17	7/22/68	7-AB3-	73	11/25/68	7-AB4-	18.2	7/22/68	7-AB4-	52	8/ 1/68
7-AB1-	44	11/25/68	7-AB3-	18	7/22/68	7-AB3-	74	11/25/68	7-AB4-	18.3	12/20/68	7-AB4-	53	10/ 4/68
7-AB1-	45	11/25/68	7-AB3-	19	7/22/68	7-AB3-	75	11/25/68	7-AB4-	18.4	10/ 4/68	7-AB4-	54	10/ 4/68
7-AB1-	46	11/25/68	7-AB3-	20	7/22/68	7-AB3-	76	11/25/68	7-AB4-	18.5	1/ 6/69	7-AB4-	55	10/ 4/68
7-AB1-	47	11/25/68	7-AB3-	21	7/22/68	7-AB3-	77	1/ 6/69	7-AB4-	19	12/20/68	7-AB4-	56	10/ 4/68
7-AB1-	48	1/ 6/69	7-AB3-	22	7/22/68	7-AB3-	78	1/ 6/69	7-AB4-	21	1/ 6/69	7-AB4-	57	10/ 4/68
7-AB1-	52	2/15/68	7-AB3-	23	7/22/68	7-AB3-	79	10/15/68	7-AB4-	22	1/ 6/69	7-AB4-	58	10/ 4/68
7-AB1-	53	7/22/68	7-AB3-	24	8/15/68	7-AB3-	80	10/15/68	7-AB4-	22.1	7/22/68	7-AB4-	59	10/ 4/68
7-AB1-	54	1/ 6/69	7-AB3-	25	10/ 4/68				7-AB4-	23	7/22/68	7-AB4-	60	7/28/70
7-AB1-	55	10/15/68	7-AB3-	26	10/ 4/68				7-AB4-	24	10/15/68	7-AB4-	61	10/ 4/68
			7-AB3-	27	10/ 4/68	7-AB4-	1	5/ 1/69	7-AB4-	25	7/22/68	7-AB4-	62	1/ 6/69
			7-AB3-	28	10/ 4/68	7-AB4-	2	1/ 6/69	7-AB4-	28	7/22/68			

LICENSED PROFESSIONAL ENGINEER LESLIE E. ROBERTSON No 34360 STATE OF NEW YORK

7-AB0-0

7- 86	VOID	7- 88- 4.1	3/19/69	7- 88-13.3	7/14/69		
		7- 88- 4.2	3/19/69	7- 88-14.1	3/19/69		
		7- 88- 4.3	3/19/69	7- 88-15.1	3/19/69		
7- 87- 1	5/ 1/69	7- 88- 4.4	3/19/69	7- 88-15.2	3/19/69		
7- 87- 2	3/19/69	7- 88- 5.1	3/19/69	7- 88-16.1	3/19/69		
7- 87- 3	3/19/69	7- 88- 5.2	3/19/69				
7- 87- 4	3/19/69	7- 88- 5.3	3/19/69				
7- 87- 5	3/19/69	7- 88- 6.1	3/19/69				
7- 87- 6.1	3/19/69	7- 88- 6.2	3/19/69				
7- 87- 6.2	3/19/69	7- 88- 7.1	3/19/69				
7- 87- 7	3/19/69	7- 88- 7.2	3/19/69				
7- 87- 8	3/19/69	7- 88- 7.3	3/19/69				
7- 87- 9	3/19/69	7- 88- 8.1	3/19/69				
7- 87-10	3/19/69	7- 88- 8.2	3/19/69				
7- 87-11	3/19/69	7- 88- 8.3	3/19/69				
7- 87-12	3/19/69	7- 88- 8.4	3/19/69				
7- 87-13	3/19/69	7- 88- 8.5	3/19/69				
7- 87-14	3/19/69	7- 88- 8.6	3/19/69				
7- 87-15	3/19/69	7- 88- 8.7	3/19/69				
7- 87-16	3/19/69	7- 88- 8.8	3/19/69				
7- 87-17	3/19/69	7- 88- 8.9	3/19/69				
7- 87-18	3/19/69	7- 88- 8.10	3/19/69				
7- 87-19	3/19/69	7- 88- 8.11	3/19/69				
7- 87-20	7/14/69	7- 88- 8.12	3/19/69				
7- 87-21	3/19/69	7- 88- 8.13	3/19/69				
7- 87-22	3/19/69	7- 88- 8.14	3/19/69				
7- 87-23	3/19/69	7- 88- 8.15	3/19/69				
7- 87-24	3/19/69	7- 88- 8.16	3/19/69				
7- 87-25	3/19/69	7- 88- 8.17	3/19/69				
7- 87-26	5/13/69	7- 88- 8.18	3/19/69				
		7- 88- 8.19	7/14/69				
		7- 88- 8.20	7/14/69				
7- 88- 1	5/ 1/69	7- 88- 9.1	3/19/69				
7- 88- 2	3/19/69	7- 88-10.1	3/19/69				
7- 88- 3.1	3/19/69	7- 88-10.2	3/19/69				
7- 88- 3.2	3/19/69	7- 88-10.3	3/19/69				
7- 88- 3.3	3/19/69	7- 88-10.4	3/19/69				
7- 88- 3.4	3/19/69	7- 88-10.5	3/19/69				
7- 88- 3.5	3/19/69	7- 88-10.6	3/19/69				
7- 88- 3.6	3/19/69	7- 88-10.7	3/19/69				
7- 88- 3.7	3/19/69	7- 88-10.8	3/19/69				
7- 88- 3.8	3/19/69	7- 88-10.9	3/19/69				
7- 88- 3.9	3/19/69	7- 88-11	NOT USED				
7- 88- 3.10	3/19/69	7- 88-12.1	3/19/69				
7- 88- 3.11	3/19/69	7- 88-12.2	3/19/69				
7- 88- 3.12	3/19/69	7- 88-12.3	3/19/69				
7- 88- 3.13	3/19/69	7- 88-12.4	7/14/69				
7- 88- 3.14	3/19/69	7- 88-12.5	3/19/69				
7- 88- 3.15	3/19/69	7- 88-13.1	3/19/69				
7- 88- 3.16	3/19/69	7- 88-13.2	7/14/69				

LICENSED PROFESSIONAL ENGINEER LESLIE E. ROBERTSON No. 24360 CITY OF THE STATE OF NEW YORK

SKILLING, HELLE, CHRISTIANSEN, ROBERTSON

PROJECT	THE WORLD TRADE CENTER	TITLE	FLOOR PANELS	DATE	10/ 5/72

EVISIONS

PRINTED 5/18/73

7-AB5- 1	5/ 1/69
7-AB5- 2	11/24/67
7-AB5- 3	6/17/68
7-AB5- 3.1	6/17/68
7-AB5- 3.2	6/17/68
7-AB5- 4	10/11/68
7-AB5- 4.1	10/18/67
7-AB5- 5	6/17/68
7-AB5- 6	6/17/68
7-AB5- 7	6/17/68
7-AB5- 8	6/17/68
7-AB5- 8.1	6/17/68
7-AB5- 8.2	6/17/68
7-AB5- 9	6/17/68
7-AB5- 10	6/17/68
7-AB5- 11	6/17/68
7-AB5- 12	6/17/68
7-AB5- 13	6/17/68
7-AB5- 14	6/17/68
7-AB5- 15	6/17/68
7-AB5- 16	11/24/67
7-AB5- 17	6/17/68
7-AB5- 18	6/17/68
7-AB5- 19	6/17/68
7-AB5- 20	3/28/69
7-AB5- 21	9/ 8/70
7-AB5- 22	9/ 8/70

2-C/1	5/29/69
2-C/2	6/13/69
7-C/1	5/13/69
7-C/2	6/13/69
8-C/1	5/14/69
8-C/2	6/13/69
9-C/1	5/20/69
9-C/2	6/13/69
10-C/1	5/14/69
10-C/2	6/13/69
11-C/1	5/14/69
11-C/2	6/13/69

FOUND IN DWG BOOK 1

LICENSED PROFESSIONAL ENGINEER
LESLIE E. ROBERTSON
No. 34360
STATE OF NEW YORK

7-ABC-C.1

SKILLING, HELLE, CHRISTIANSEN, ROBERTSON — Structural & Civil Engineers

PROJECT THE WORLD TRADE CENTER | TITLE FLOOR TRUSSES - INDEX & GENERAL NOTES | DATE 10-20-67

REVISIONS

1-3-68
1-26-68
2-15-68
4-1-68
1-3-69
1-6-69
2-3-69
3-3-69
4-1-69
Printed 5-1-69

7-AB1- 1	Floor Trusses Index & General Notes
7-AB1- 2	Floor Truss 32T1
7-AB1- 3	Floor Truss 32T2
7-AB1- 4	Floor Truss 32T7
7-AB1- 5	Floor Truss 32T8
7-AB1- 6	Floor Truss 32T3
7-AB1- 7	Floor Truss 32T9
7-AB1- 8	Floor Truss 32T10
7-AB1- 9	Floor Truss 32T11
7-AB1-10	Floor Truss 32T4
7-AB1-11	Floor Truss 32T5 & 32T12
7-AB1-12	Floor Truss 32T13, 32T6
7-AB1-13	Floor Truss 32T14
7-AB1-14	Floor Truss 32T15
7-AB1-15	Floor Truss 32T16
7-AB1-16	Floor Truss 32T17
7-AB1-17	Floor Truss 32T18
7-AB1-18	Floor Truss 32T19
7-AB1-19	Floor Truss 32T20
7-AB1-20	Floor Truss 32T21
7-AB1-21	Floor Truss 32T22
7-AB1-22	Floor Truss 32T23, 32T24
7-AB1-23	Floor Truss 32T25, 32T26
7-AB1-24	Floor Truss 32T27
7-AB1-25	Floor Truss 32T28
7-AB1-26	Floor Truss 32T29
7-AB1-27	Floor Truss 32T30
7-AB1-28	Floor Truss 32T31
7-AB1-29	Floor Truss 32T32
7-AB1-30	Floor Truss 32T33
7-AB1-31	Floor Truss 32T34
7-AB1-32	Floor Truss 32T36
7-AB1-33	Floor Truss 32T37
7-AB1-34	Floor Truss 32T38
7-AB1-35	Floor Truss 32T39
7-AB1-36	Floor Truss 32T40
7-AB1-44	Floor Truss 32T49
7-AB1-45	Floor Truss 32T50
7-AB1-46	Floor Truss 32T51
7-AB1-47	Floor Truss 32T52
7-AB1-48	Floor Truss 32T53, 32T35
7-AB1-52	Typical Details
7-AB1-53	Typical Details
7-AB1-54	Floor Trusses - Cambers
7-AB1-55	Floor Trusses - Section A-A & B-B

LICENSED PROFESSIONAL ENGINEER — LESLIE E. ROBERTSON — No. 34360 — UNIVERSITY OF THE STATE OF NEW YORK

DESIGNED

DRAWN

REVIEWED

GENERAL NOTES:

1. All material, including detail material not shown on these drawings to be Fy = 50 unless otherwise noted.

2. All floor truss angles have short legs vertical.

3. Horizontal shear forces between truss panel points and the composite concrete slab are indicated [ ] in the truss elevations. Where no shear force is given, the connection shall be proportioned for a force of 7 Kips (7). See Drawing 7-AB2-1 for additional notes for additional shear forces at trusses C32 and 24T.

4. Shear transfer connections and devices shall be proportioned for the indicated horizontal shear force [ ] acting simultaneously with the horizontal shear force requirements indicated in the drawings for 24T trusses. Such connections and devices shall be proportioned for shear forces from C32 & 24T trusses of both positive sign and of negative sign.

5. Contractor shall supply representative calculations and/or test results for each connection proportioned by the Contractor. All connections, details and the like are subject to approval by the Engineer.

6. End reactions of each truss are indicated in truss elevations as "R = ". Where no force is given, end connections shall be proportioned for a minimum reaction of 9 Kips (R = 9).

7. Truss shear, indicating minimum requirements for each truss web member, is tabulated across the bottom of the truss elevations. Where no shear is given, web members and their connections shall be proportioned for a minimum shear of 4.5 Kips.

8. All 32T trusses shall be cambered to a parabolic camber symmetrical about mid-span. Camber diagrams indicate required camber at mid-span.

9. Chord stresses are indicated in truss elevations as "P = ". Where no force is given each truss chord splice connection shall be proportioned for a minimum force of 23 Kips (P = 23).

   Vertical shear forces between adjacent panels are indicated in truss elevations as "V = ". Where no force is given, shear transfer connection shall be proportioned for a minimum force of 5 Kips (V = 5). Connections shall be proportioned for a shear force of both positive sign and negative sign.

SKILLING - HELLE - CHRISTIANSEN - ROBERTSON — Structural & Civil Engineers

PROJECT: THE WORLD TRADE CENTER | TITLE: FLOOR TRUSS C 32 T1 | DATE: 10-20-67

REVISIONS

1-3-68
1-26-68
2-15-68
7-22-68

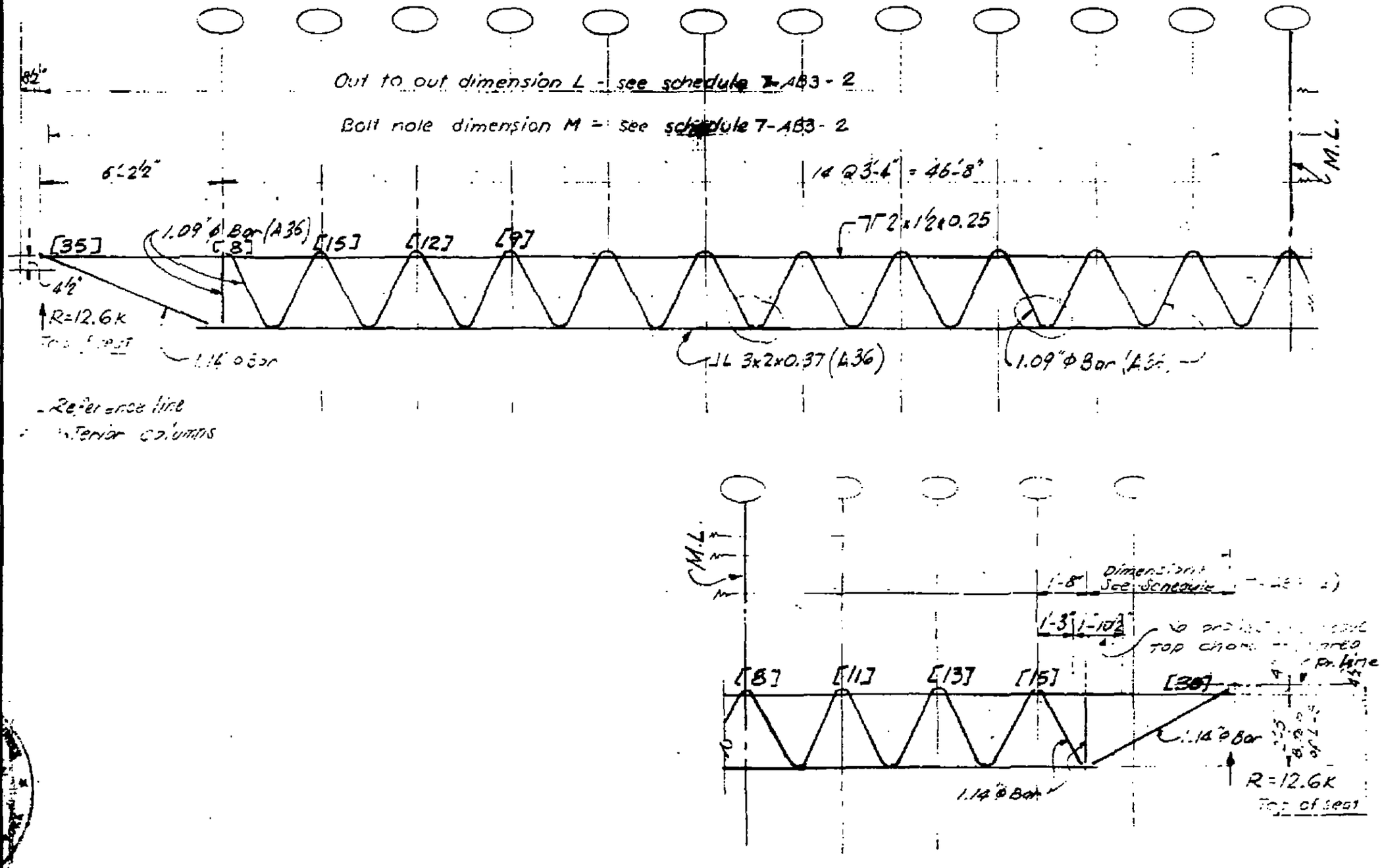

Elevation C32T1

7-AB1-2

SKILLING - HELLE - CHRISTIANSEN - ROBERTSON Structural & Civil Engineers

PROJECT THE WORLD TRADE CENTER | TITLE FLOOR TRUSS C32T2 | DATE 1-3-68

REVISIONS

1-26-68
4-15-68
7-22-68

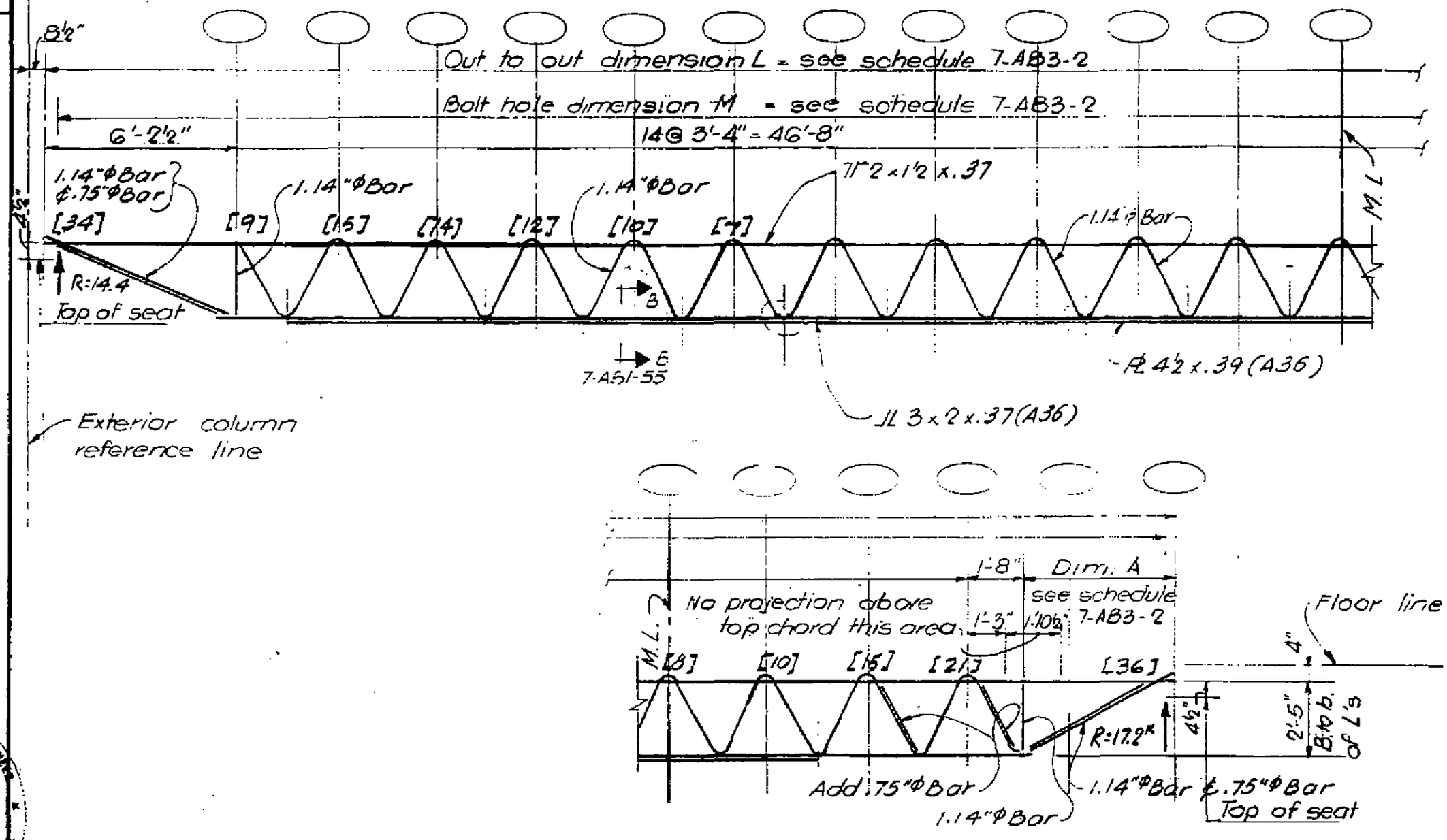

Elevation C32T2

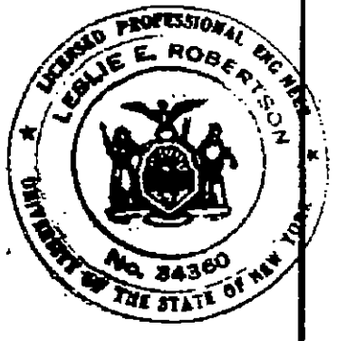

7-AB1-3

SKILLING - HELLE - CHRISTIANSEN - ROBERTSON Structural & Civil Engineers

PROJECT THE WORLD TRADE CENTER | TITLE FLOOR TRUSS C32T7. | DATE 1-3-68

REVISIONS

1-26-68
4-1-68
4-15-68
7-22-68

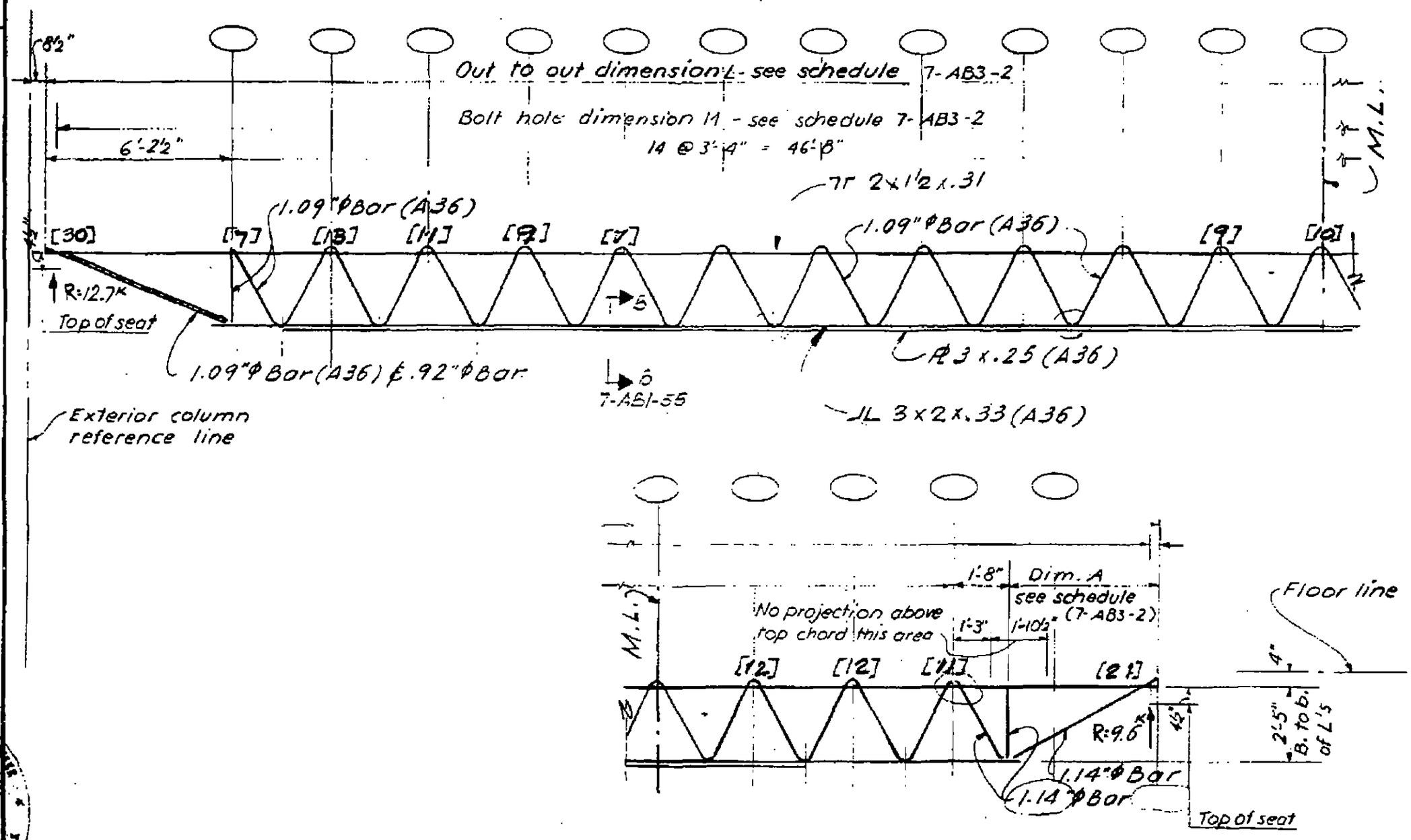

Elevation C32T.7.

7-AB1-4

SKILLING - HELLE - CHRISTIANSEN - ROBERTSON Structural & Civil Engineers

PROJECT THE WORLD TRADE CENTER | TITLE FLOOR TRUSS C32T8 | DATE 1-3-68

REVISIONS

1-26-68
4-1-68
4-15-68
7-22-68
10-15-68

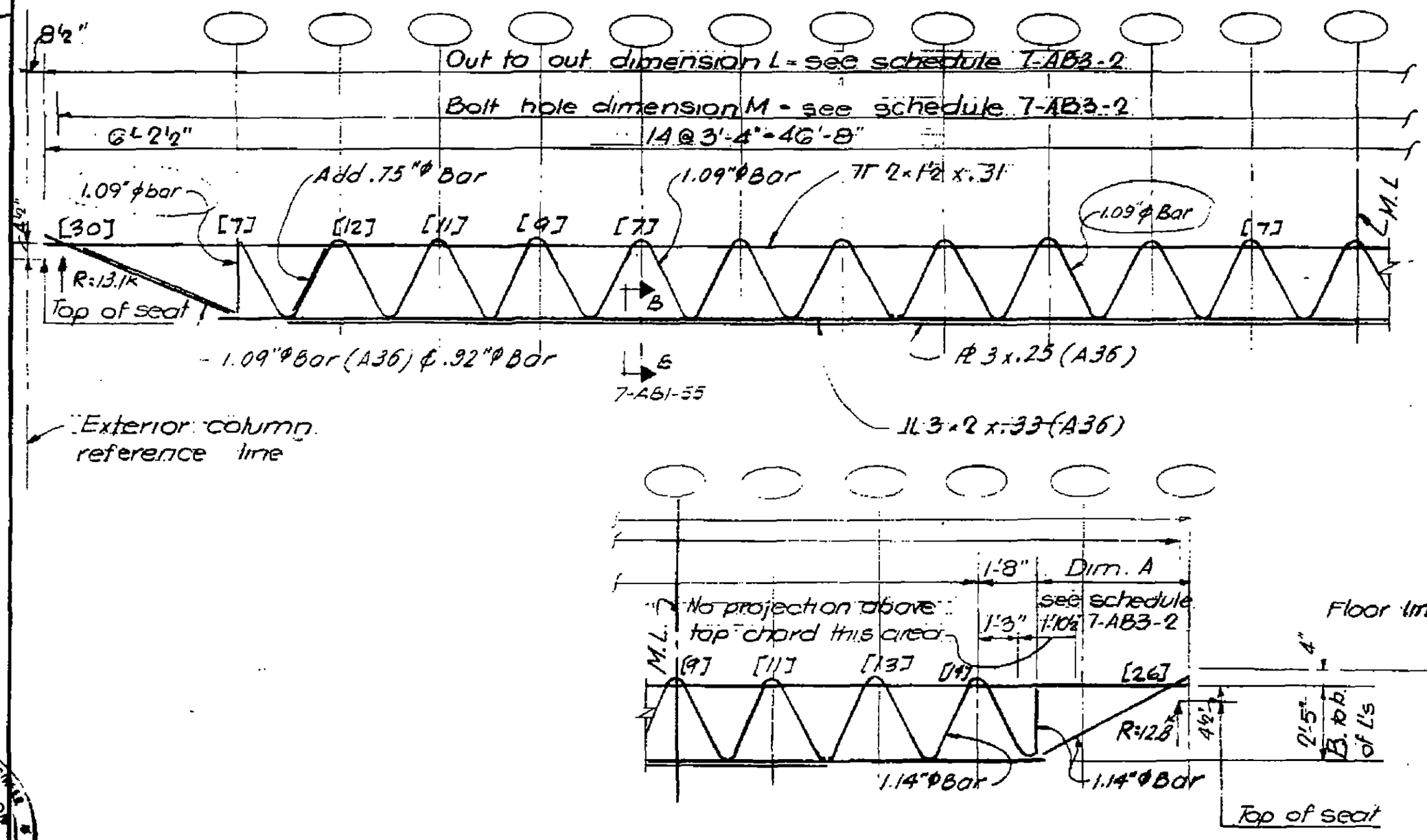

Elevation C32T8

LICENSED PROFESSIONAL ENGINEER LESLIE E. ROBERTSON No. 34360 UNIVERSITY OF THE STATE OF NEW YORK

7-AB1-5

SKILLING - HELLE - CHRISTIANSEN - ROBERTSON Structural & Civil Engineers

PROJECT THE WORLD TRADE CENTER | TITLE FLOOR TRUSS C32T3 | DATE 1-9-68

REVISIONS

1-26-68
4-15-68
5-10-68
7-22-68

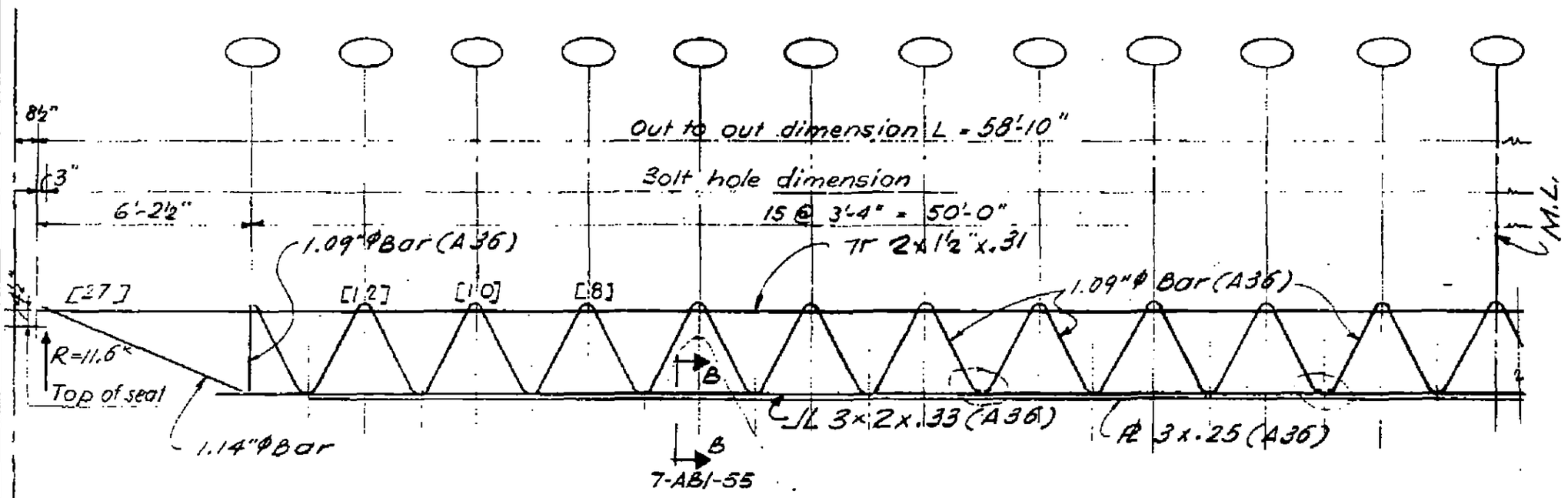

Exterior columns ref. line

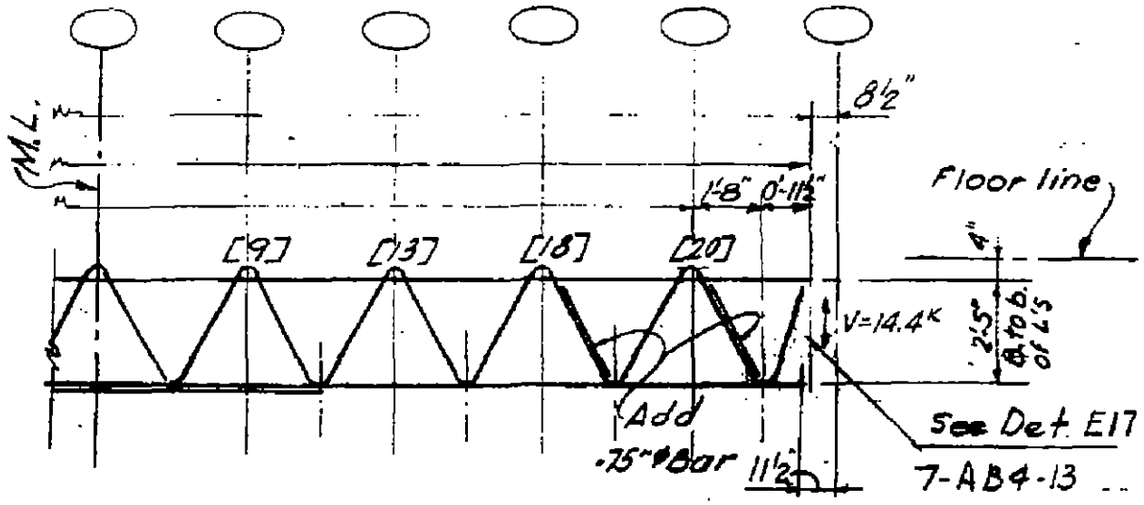

Elevation C32T3

6

7-AB1-6

SKILLING - HELLE - CHRISTIANSEN - ROBERTSON Structural & Civil Engineers

PROJECT THE WORLD TRADE CENTER | TITLE ~~FLOOR~~ TRUSS C32T9 | DATE 1-3-68

REVISIONS

1-26-68
4-1-68
4-15-68
5-10-68
7-22-68

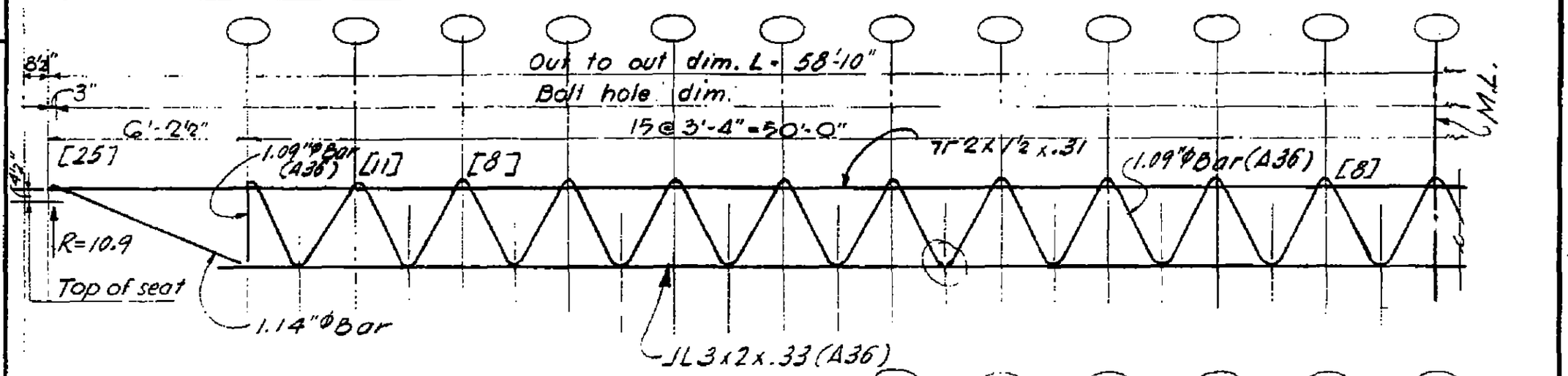

Exterior col ref. line

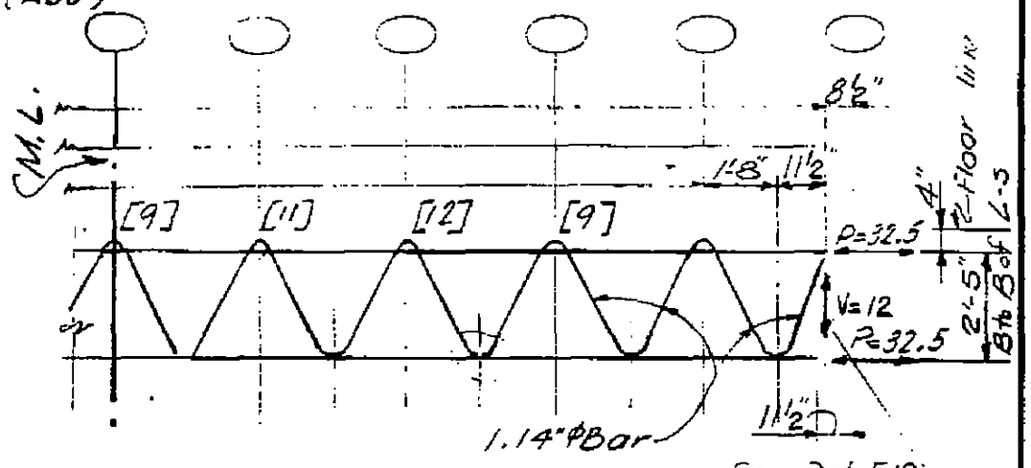

Elevation C32T9

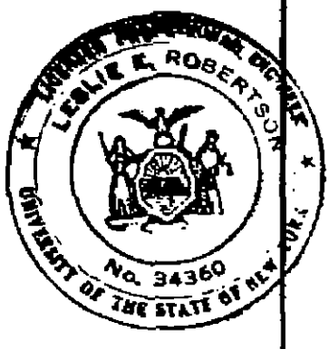

2

7-AB1-7

SKILLING - HELLE - CHRISTIANSEN - ROBERTSON Structural & Civil Engineers

PROJECT THE WORLD TRADE CENTER | TITLE FLOOR TRUSS C32T10 | DATE 1-26-68

REVISIONS

4-1-68
5-10-68
7-22-68

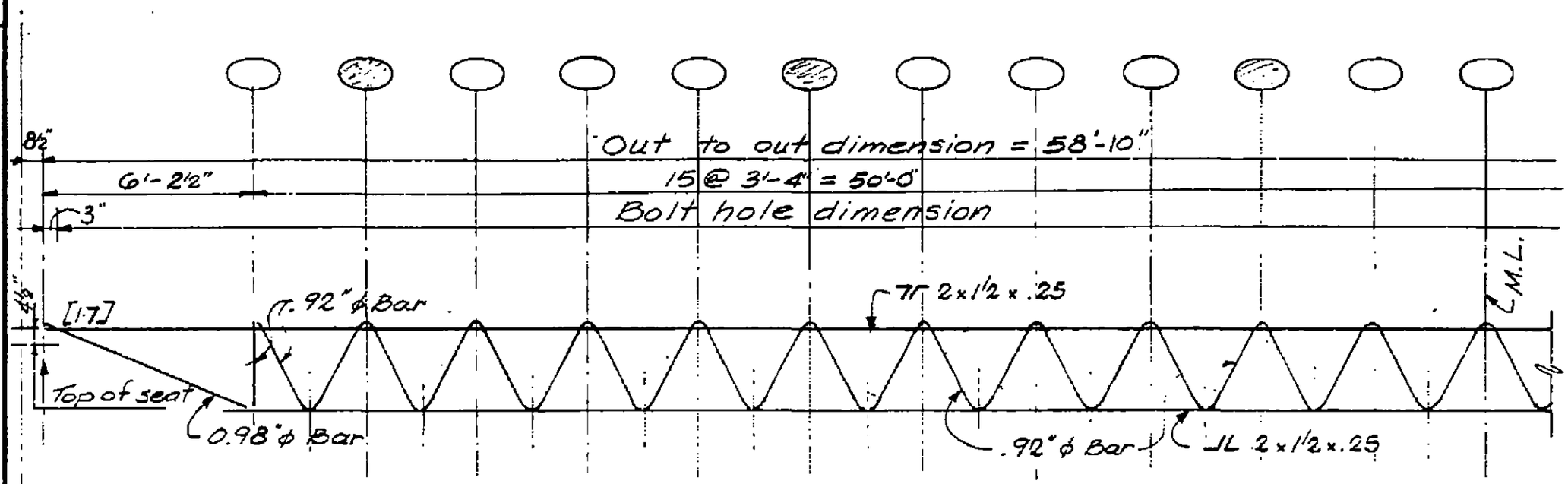

Exterior columns ref. line

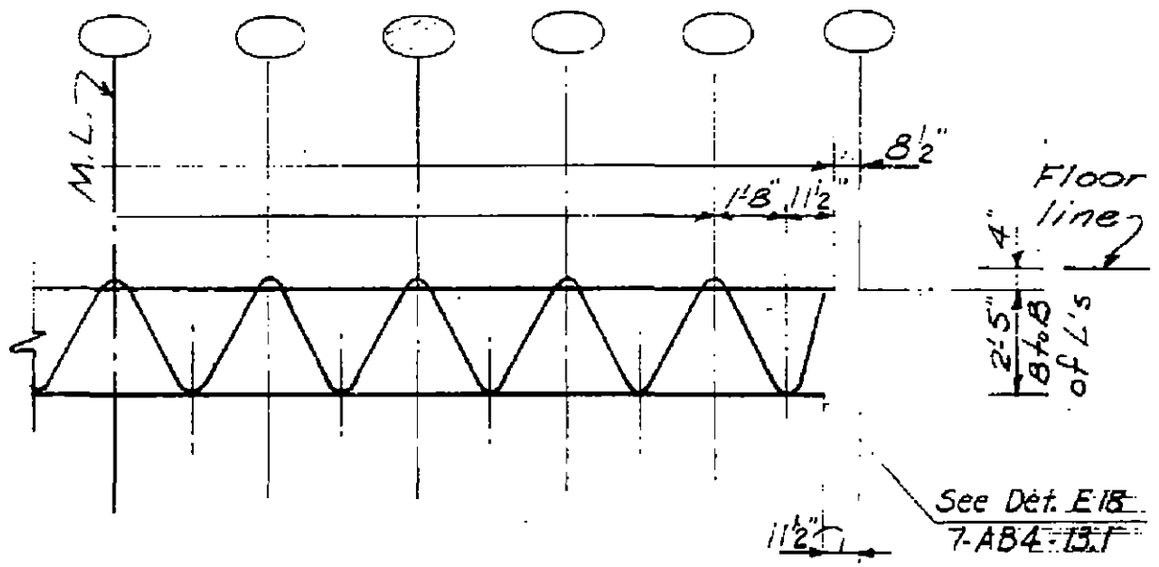

Elevation C32T10

LICENSED PROFESSIONAL ENGINEER
LESLIE E. ROBERTSON
No. 34360
UNIVERSITY OF THE STATE OF NEW YORK

7-AB1-8

SKILLING - HELLE - CHRISTIANSEN - ROBERTSON Structural & Civil Engineers

PROJECT THE WORLD TRADE CENTER | TITLE FLOOR TRUSS C32T11 | DATE 1-26-68

REVISIONS

4-1-68
5-10-68
7-22-68

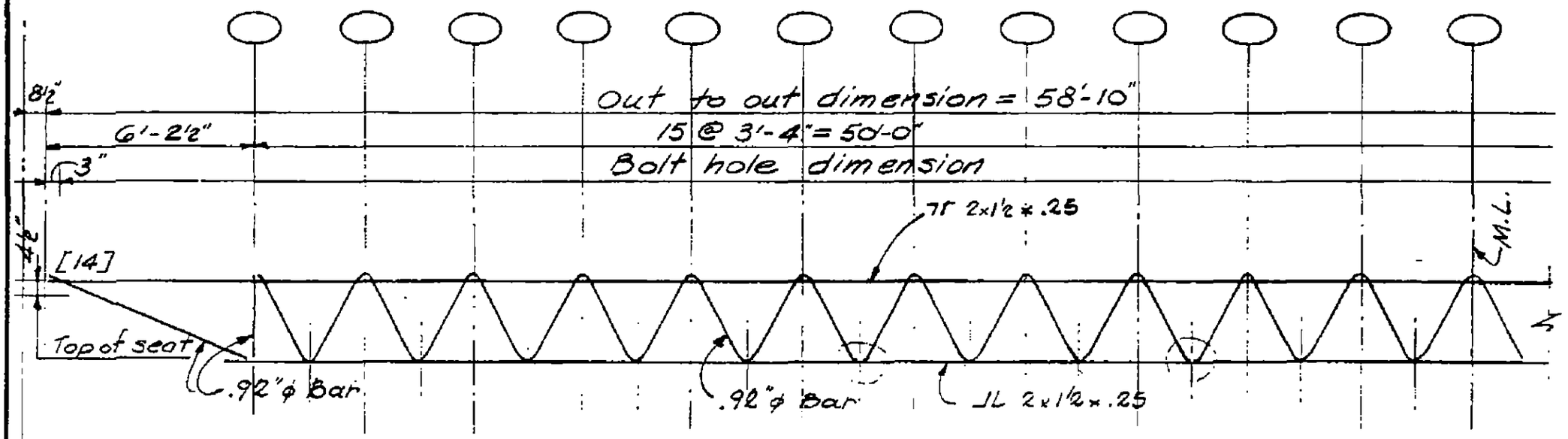

Exterior columns ref. line

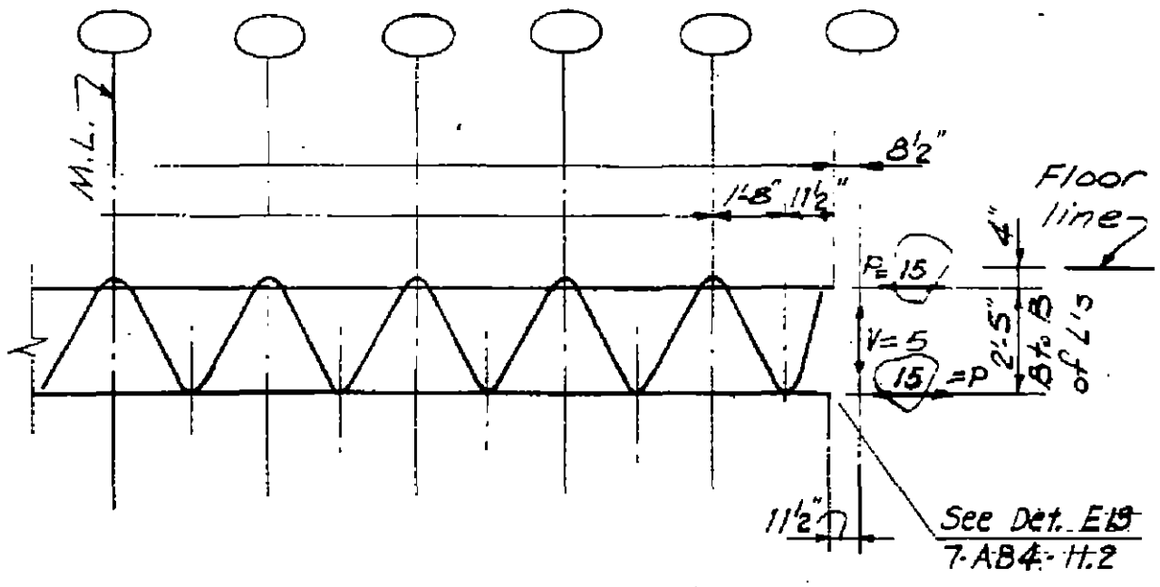

Elevation C32T11

LICENSED PROFESSIONAL ENGINEER
LESLIE E. ROBERTSON
No. 34360
STATE OF NEW YORK

SKILLING - HELLE - CHRISTIANSEN - ROBERTSON Structural & Civil Engineers

PROJECT THE WORLD TRADE CENTER | TITLE FLOOR TRUSS C32T4 | DATE 1-3-68

REVISIONS

1-26-68
4-1-68
5-10-68
7-22-68

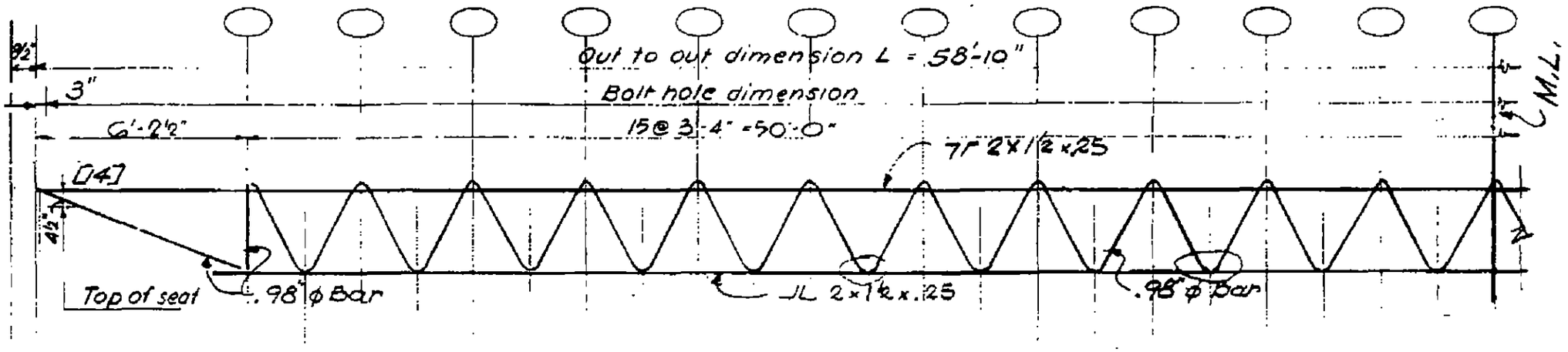

2 Exterior col. ref. line

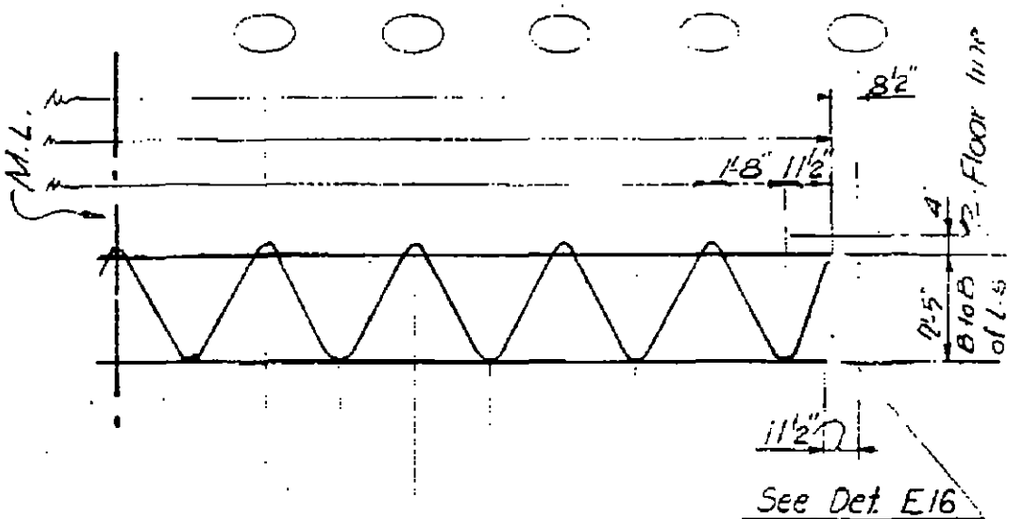

Elevation C32T4

LEWIS E. ROBERTSON
REGISTERED PROFESSIONAL ENGINEER
No. 34960
STATE OF NEW YORK

7-AB1-10

SKILLING - HELLE - CHRISTIANSEN - ROBERTSON Structural & Civil Engineers

PROJECT THE WORLD TRADE CENTER | TITLE FLOOR TRUSS C32T5 & C32T12 | DATE 10-20-67

REVISIONS

1-3-68
1-26-68
2-15-68
4-1-68
7-22-68

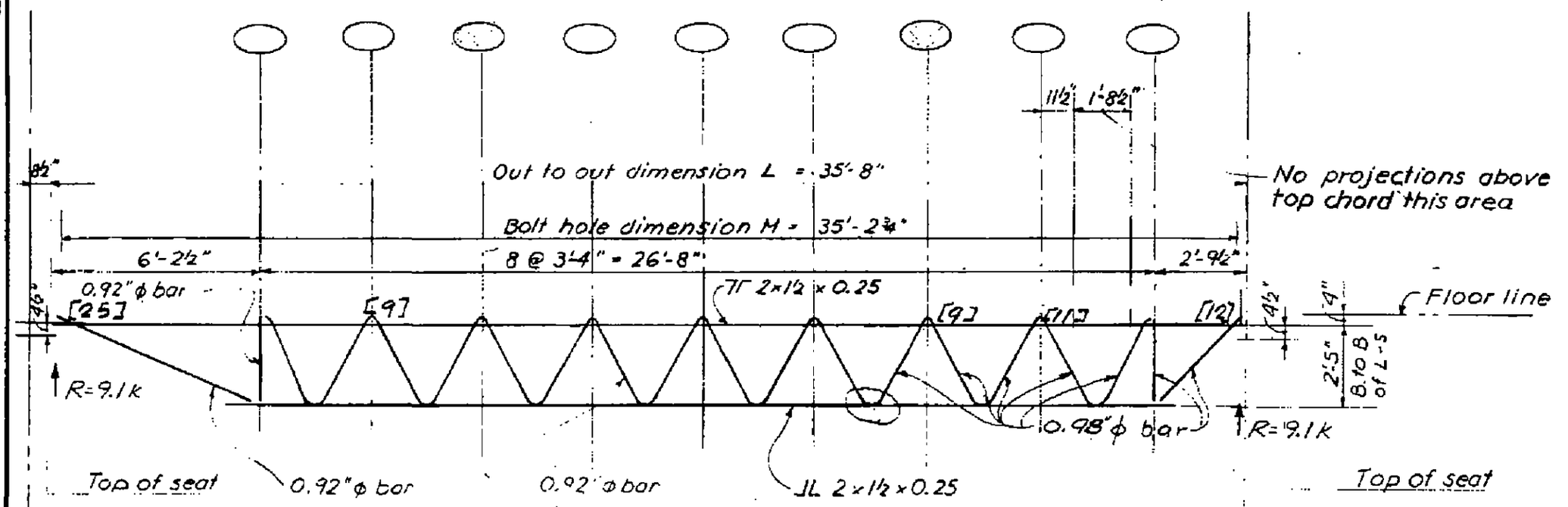

Elevation C32T5

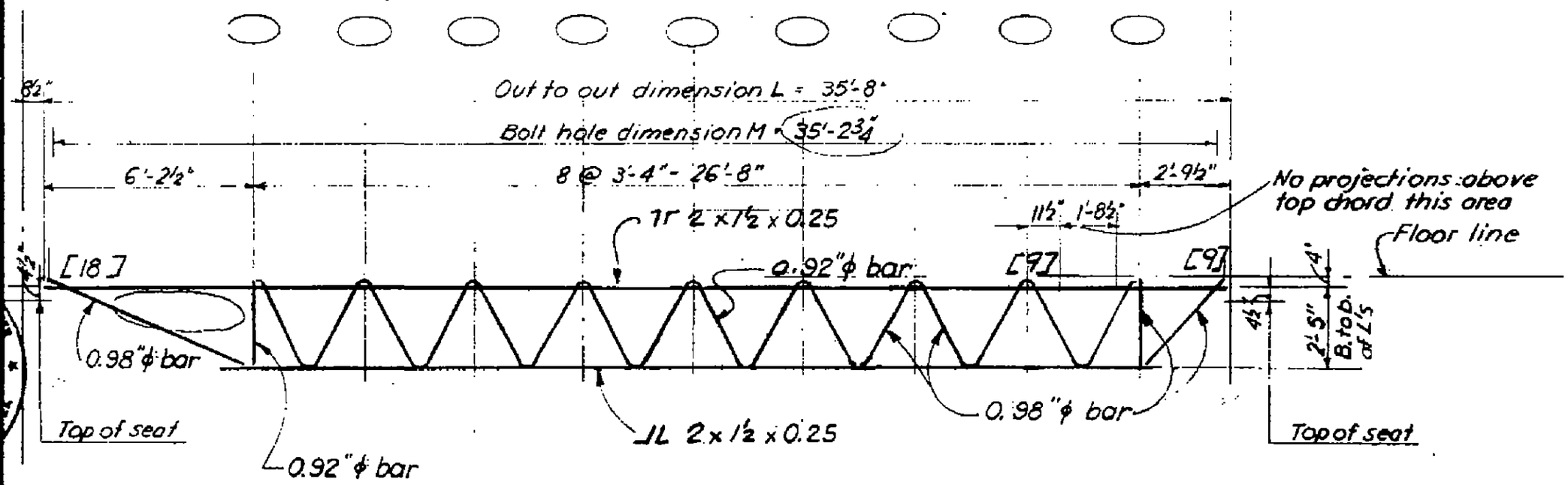

Elevation C32T12

LICENSED PROFESSIONAL ENGINEER LESLIE E. ROBERTSON No. 34960 STATE OF NEW YORK

11

7-AB1-11

SKILLING - HELLE - CHRISTIANSEN - ROBERTSON Structural & Civil Engineers

PROJECT THE WORLD TRADE CENTER | TITLE FLOOR TRUSS C32 T13 & T6 | DATE 1-3-68

REVISIONS

1-26-68
4-1-68
5-10-68
7-22-68

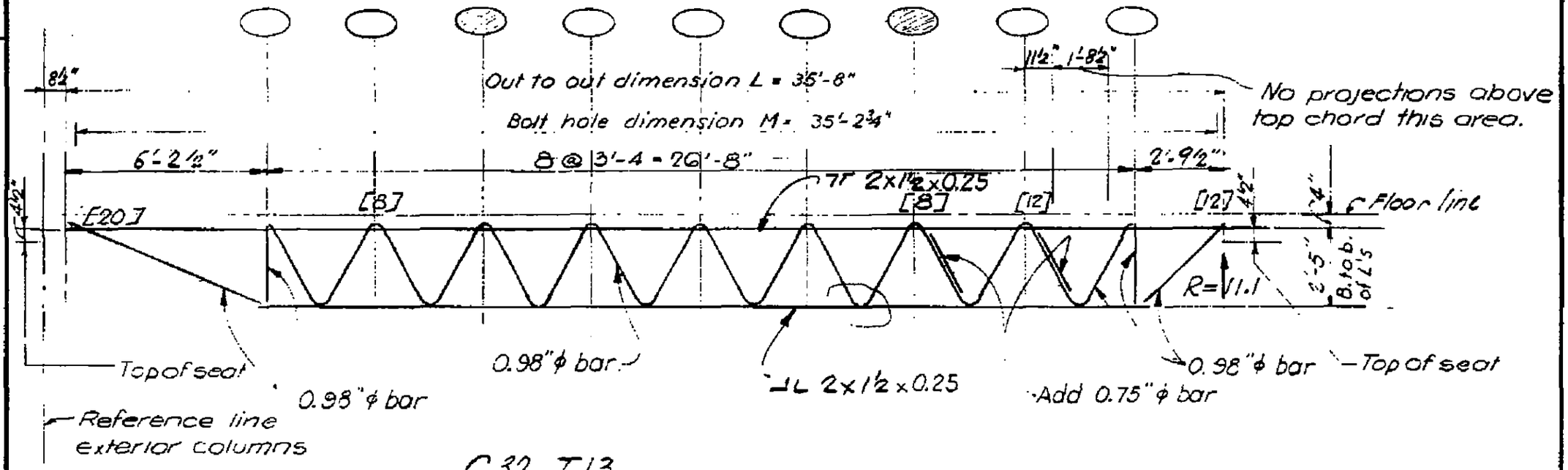

C32 T13

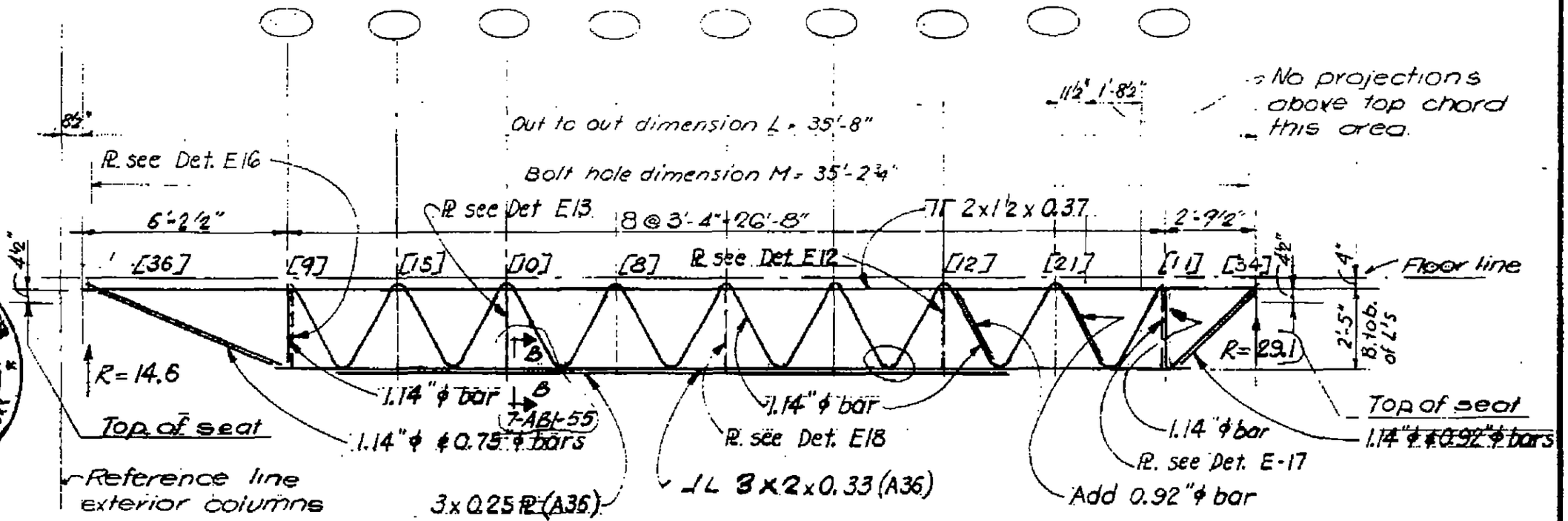

C32 T6

LICENSED PROFESSIONAL ENGINEER LESLIE E. ROBERTSON No. 34000 UNIVERSITY OF THE STATE OF NEW YORK

7-AB1-12

SKILLING - HELLE - CHRISTIANSEN - ROBERTSON Structural & Civil Engineers

PROJECT THE WORLD TRADE CENTER | TITLE FLOOR TRUSS C32 T14 | DATE 8-1-68

REVISIONS

8-15-68
10-4-68

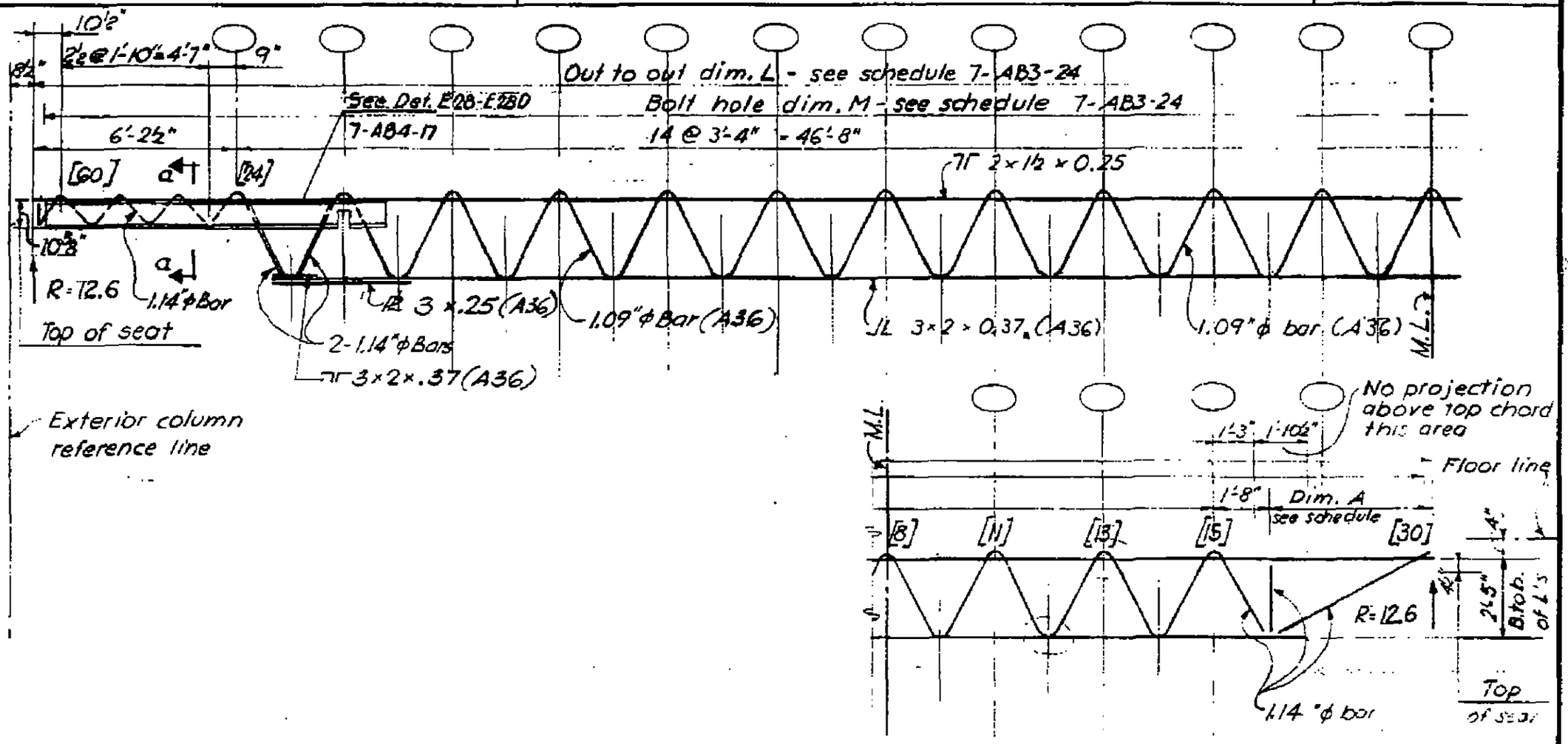

Elevation C32 T14

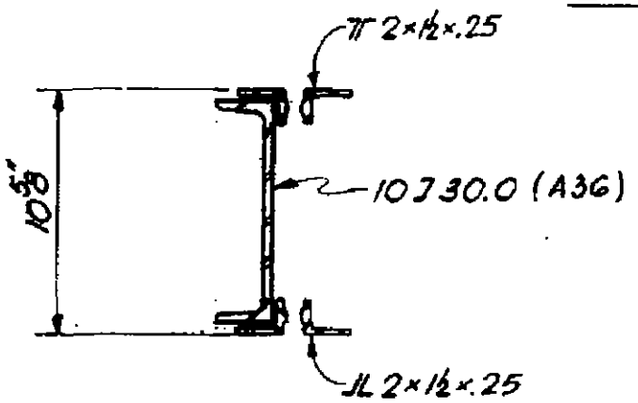

Section a-a

7-AB1-13

SKILLING - HELLE - CHRISTIANSEN - ROBERTSON Structural & Civil Engineers

PROJECT THE WORLD TRADE CENTER | TITLE FLOOR TRUSS C32 T15 | DATE 8-15-68

REVISIONS

10-4-68

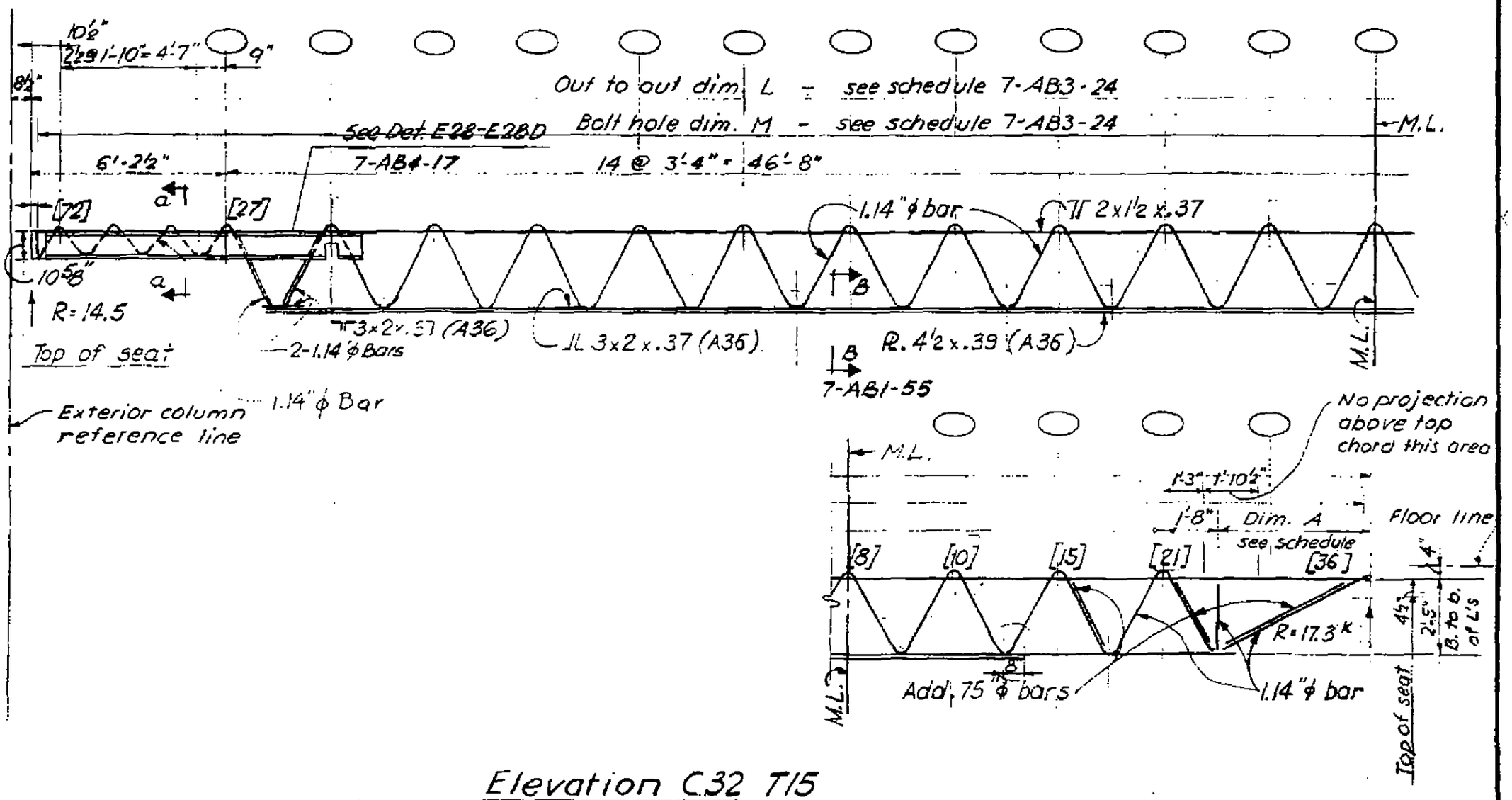

Elevation C32 T15

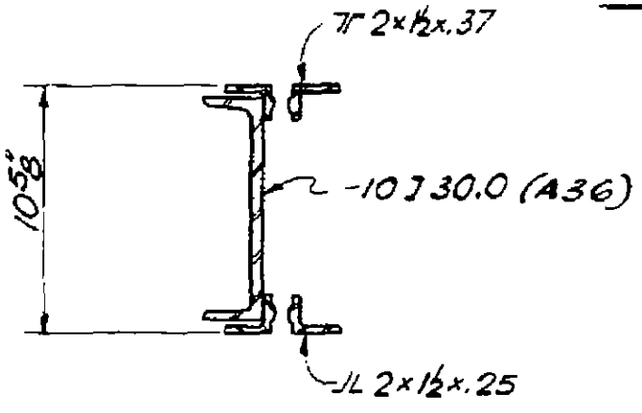

Section a-a

LICENSED PROFESSIONAL ENGINEER
LESLIE E. ROBERTSON
No. 34360
UNIVERSITY OF THE STATE OF NEW YORK

7-AB1-14

SKILLING - HELLE - CHRISTIANSEN - ROBERTSON Structural & Civil Engineers

PROJECT THE WORLD TRADE CENTER | TITLE FLOOR TRUSS C32T16 | DATE 8-15-68

REVISIONS

10-4-68

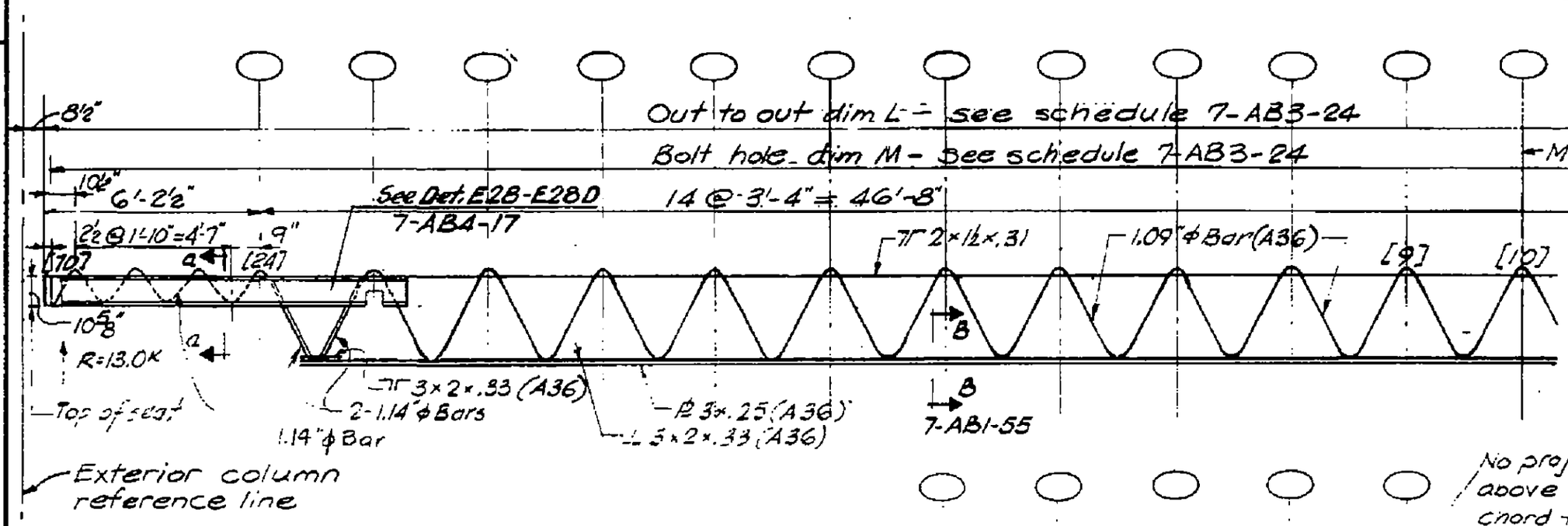

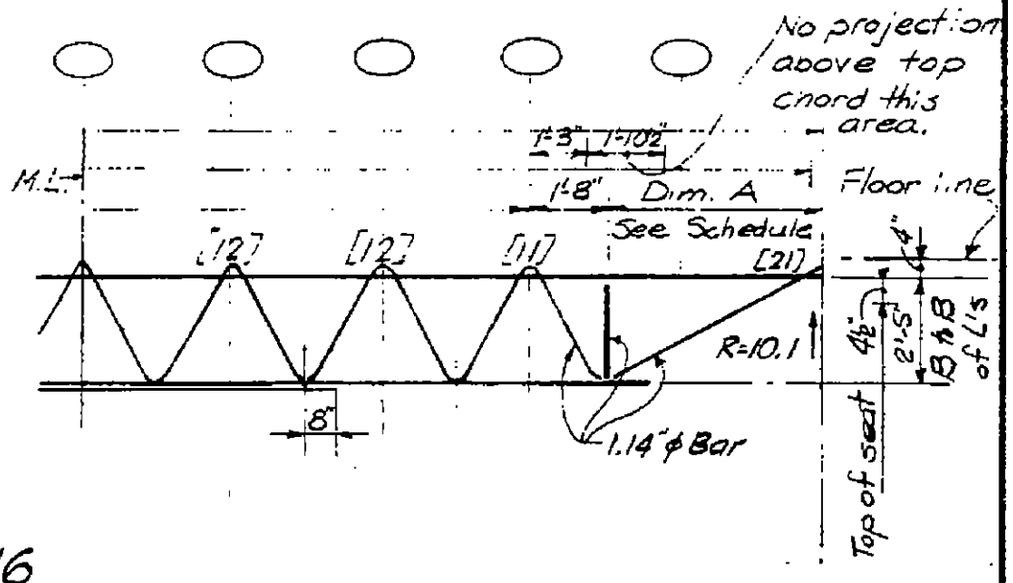

Elevation C32T16

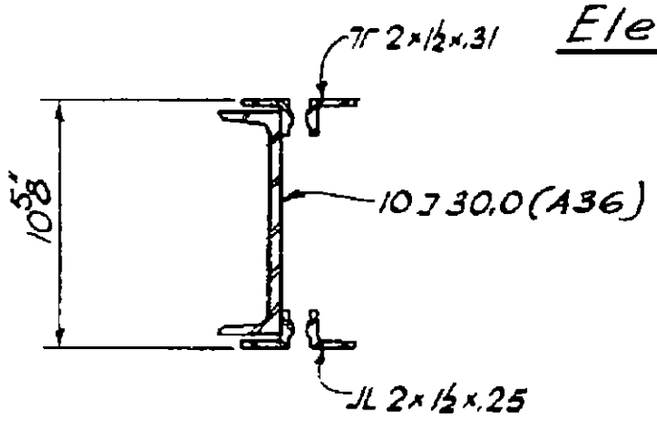

Section a-a

LICENSED PROFESSIONAL ENGINEER
LESLIE E. ROBERTSON
No. 34360
UNIVERSITY OF THE STATE OF NEW YORK

7-AB1-15

SKILLING - HELLE - CHRISTIANSEN - ROBERTSON Structural & Civil Engineers

PROJECT THE WORLD TRADE CENTER | TITLE FLOOR TRUSS C32 T17 | DATE 8-15-68

REVISIONS

10-4-68

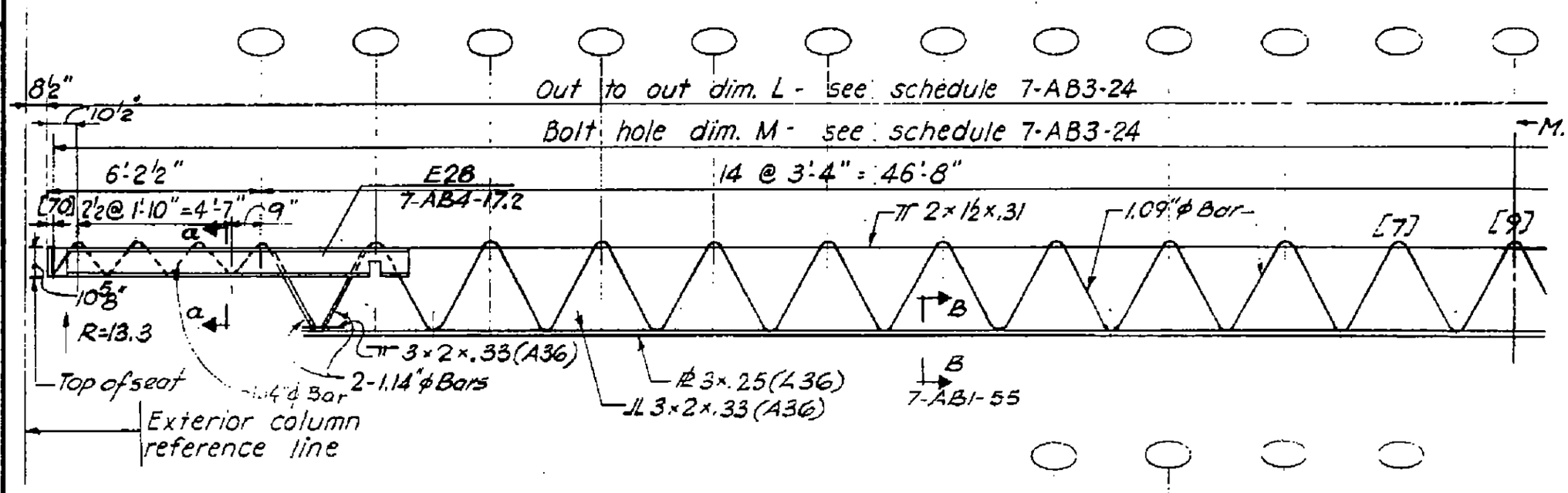

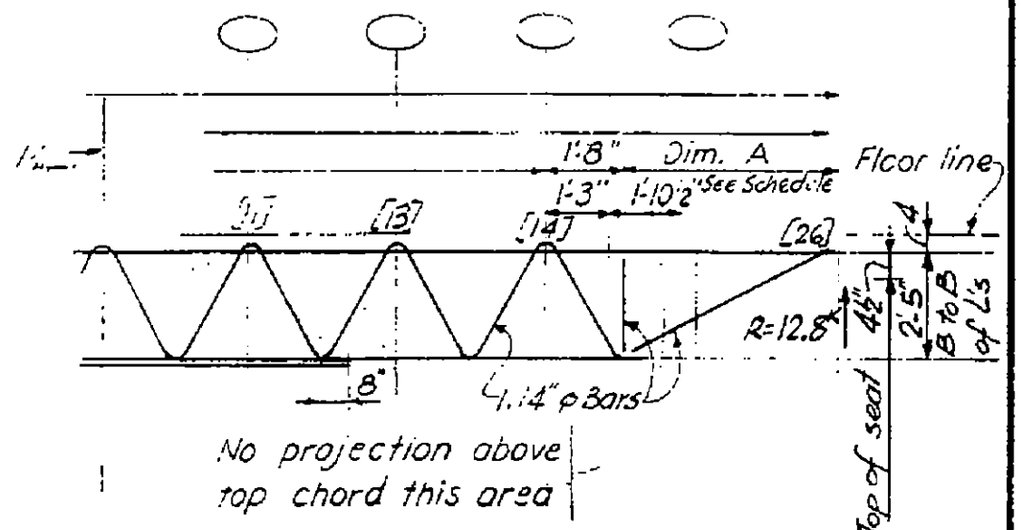

Elevation C32 T17

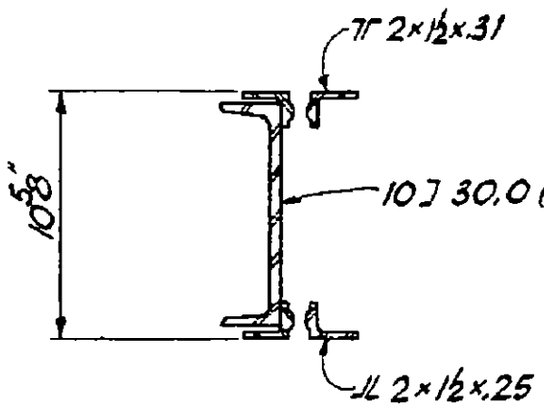

Section a-a

7-AB1-16

SKILLING - HELLE - CHRISTIANSEN - ROBERTSON Structural & Civil Engineers

PROJECT THE WORLD TRADE CENTER | TITLE FLOOR TRUSS C 32 T18 | DATE 8-15-68

REVISIONS

10-4-68

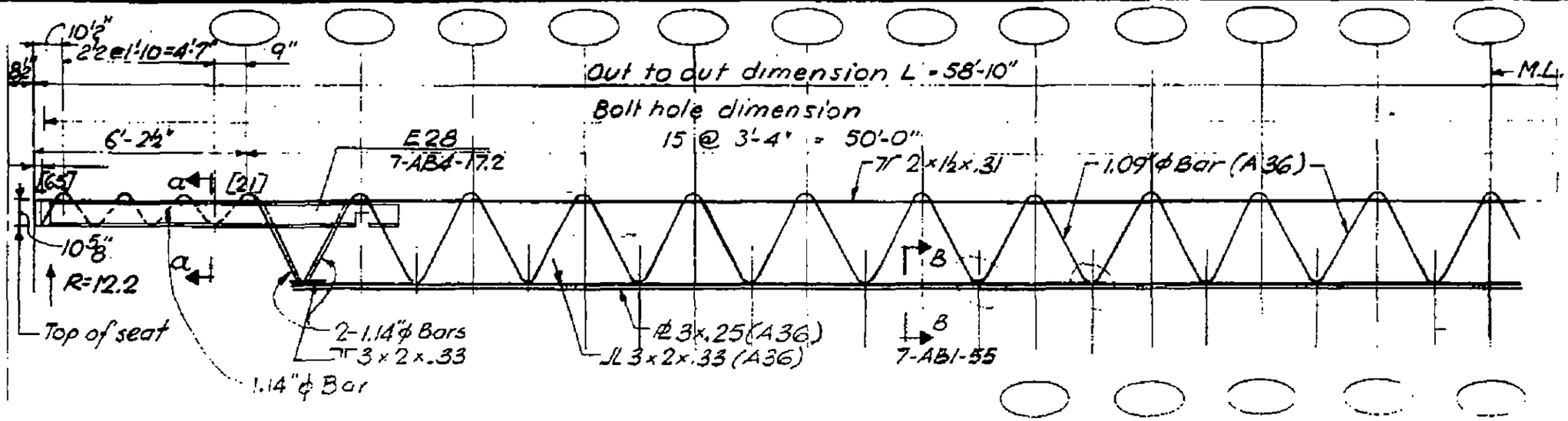

Exterior col. ref. line

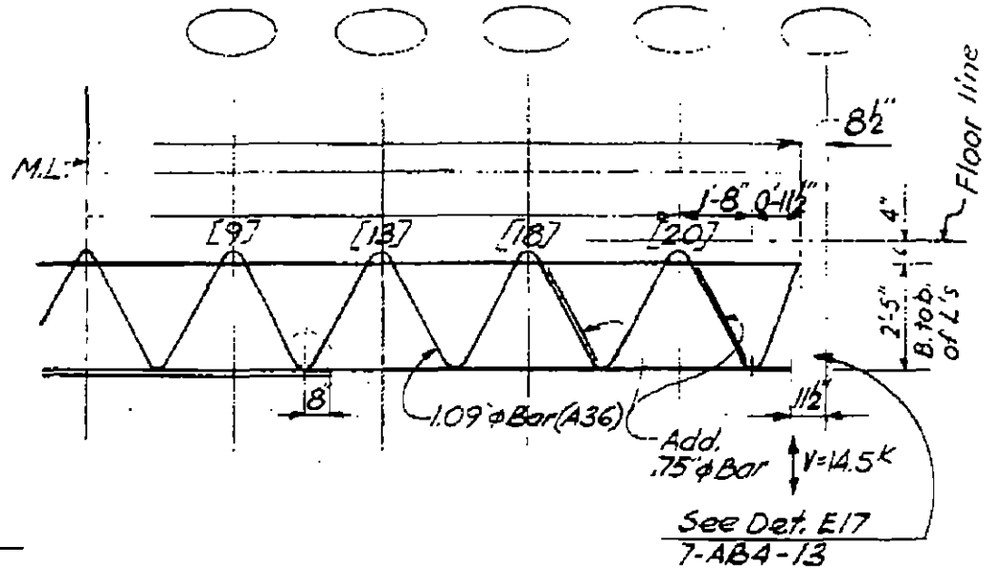

Elevation C32 T18

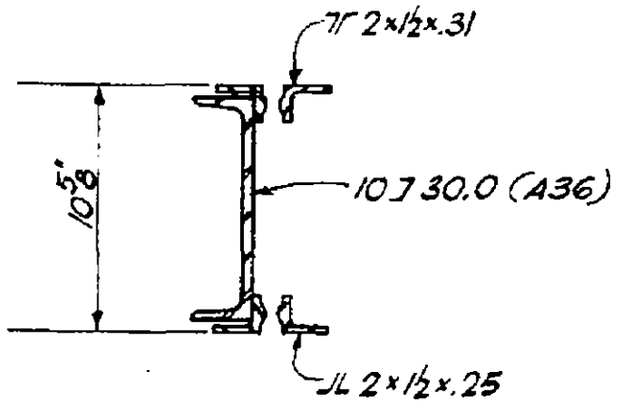

Section a-a

LICENSED PROFESSIONAL ENGINEER
LESLIE E. ROBERTSON
No. 34360
UNIVERSITY OF THE STATE OF NEW YORK

7-AB1-17

SKILLING - HELLE - CHRISTIANSEN - ROBERTSON Structural & Civil Engineers

PROJECT THE WORLD TRADE CENTER | TITLE FLOOR TRUSS C32 T19 | DATE 8-15-68

REVISIONS

10-4-68

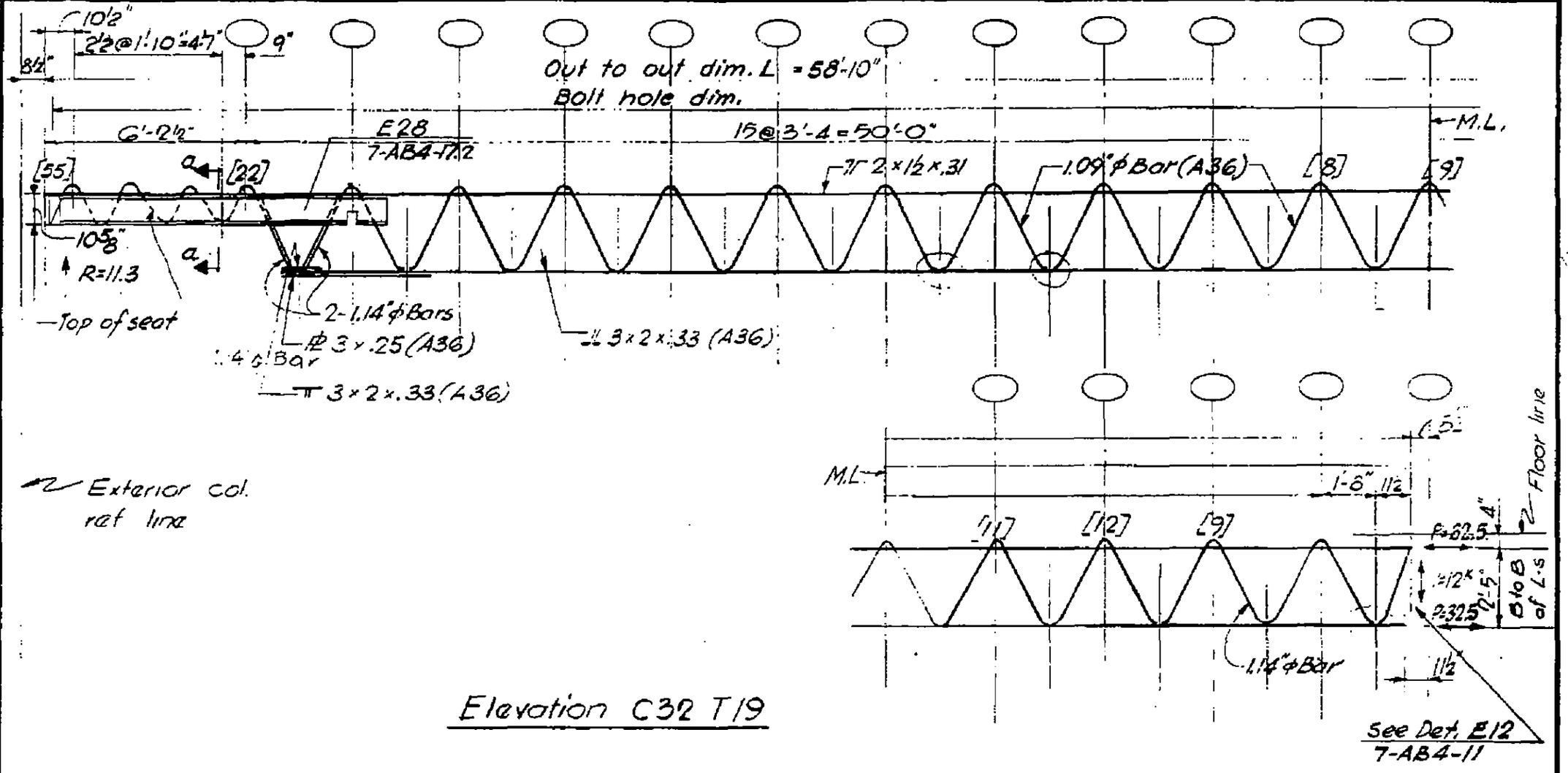

Elevation C32 T19

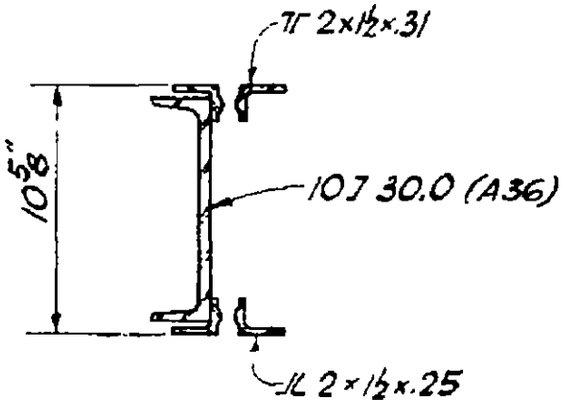

Section a-a

7-AB1-18

SKILLING - HELLE - CHRISTIANSEN - ROBERTSON Structural & Civil Engineers

PROJECT THE WORLD TRADE CENTER | TITLE FLOOR TRUSS C32 T20 | DATE 8-15-68

REVISIONS

10-4-68

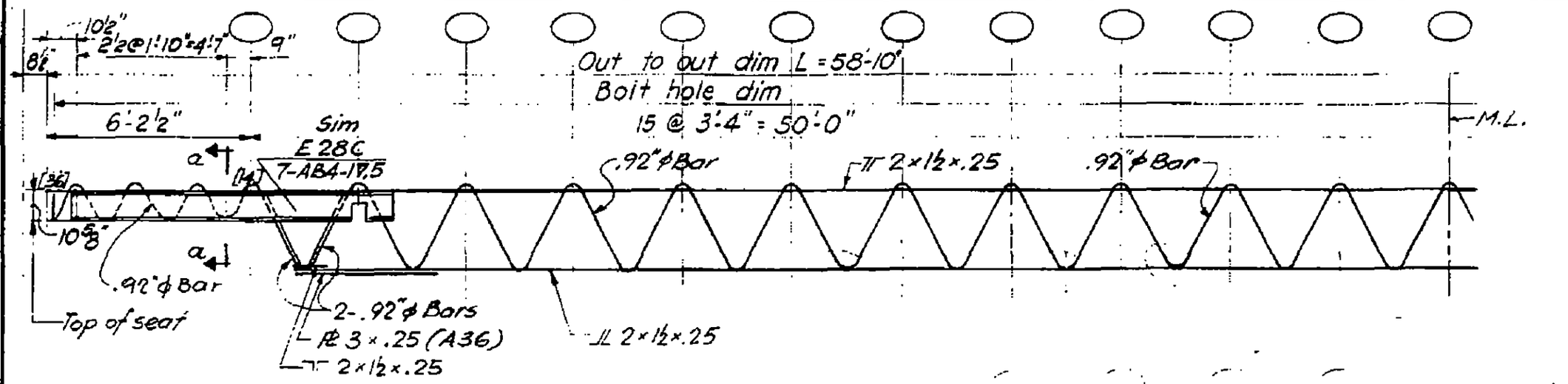

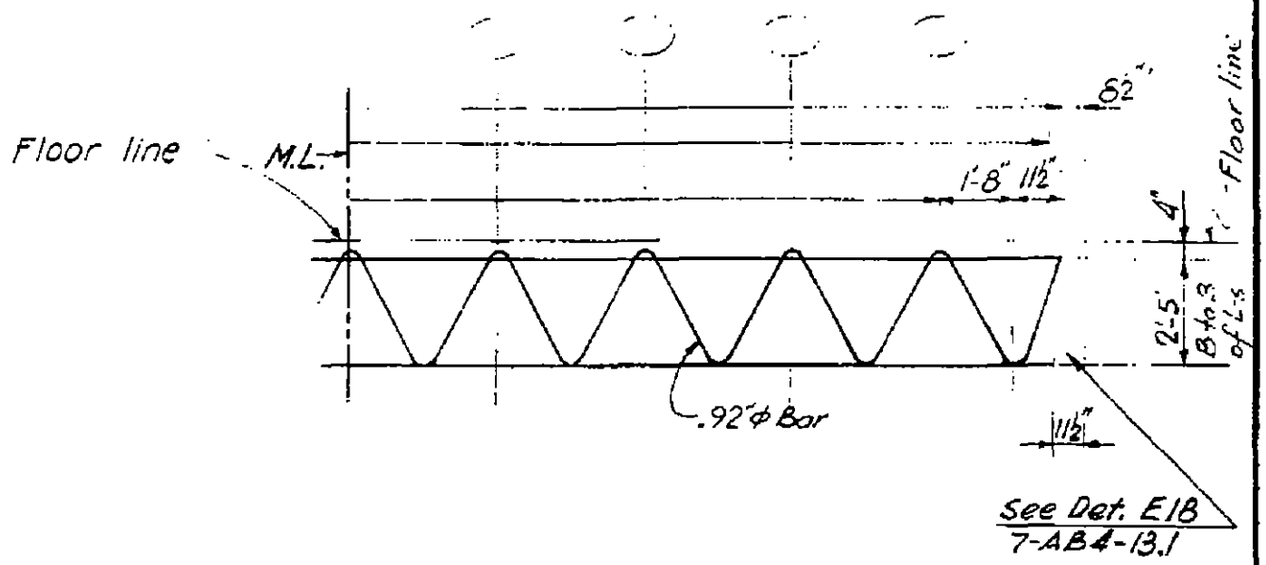

Elevation C32 T20

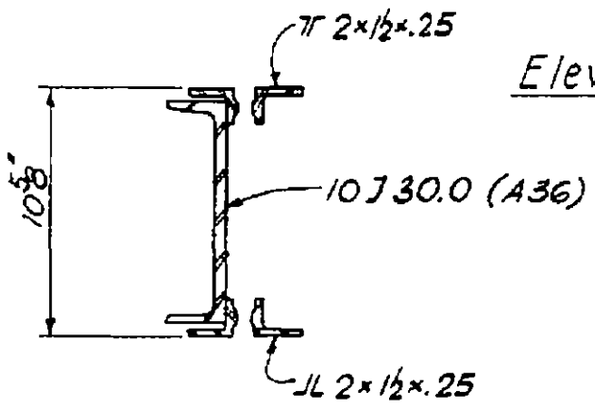

Section a-a

LICENSED PROFESSIONAL ENGINEER
LESLIE E. ROBERTSON
No. 34360
UNIVERSITY OF THE STATE OF NEW YORK

7-AB1-19

SKILLING - HELLE - CHRISTIANSEN - ROBERTSON Structural & Civil Engineers

PROJECT THE WORLD TRADE CENTER | TITLE FLOOR TRUSS C32 T21 | DATE 8-15-68

REVISIONS

10-4-68

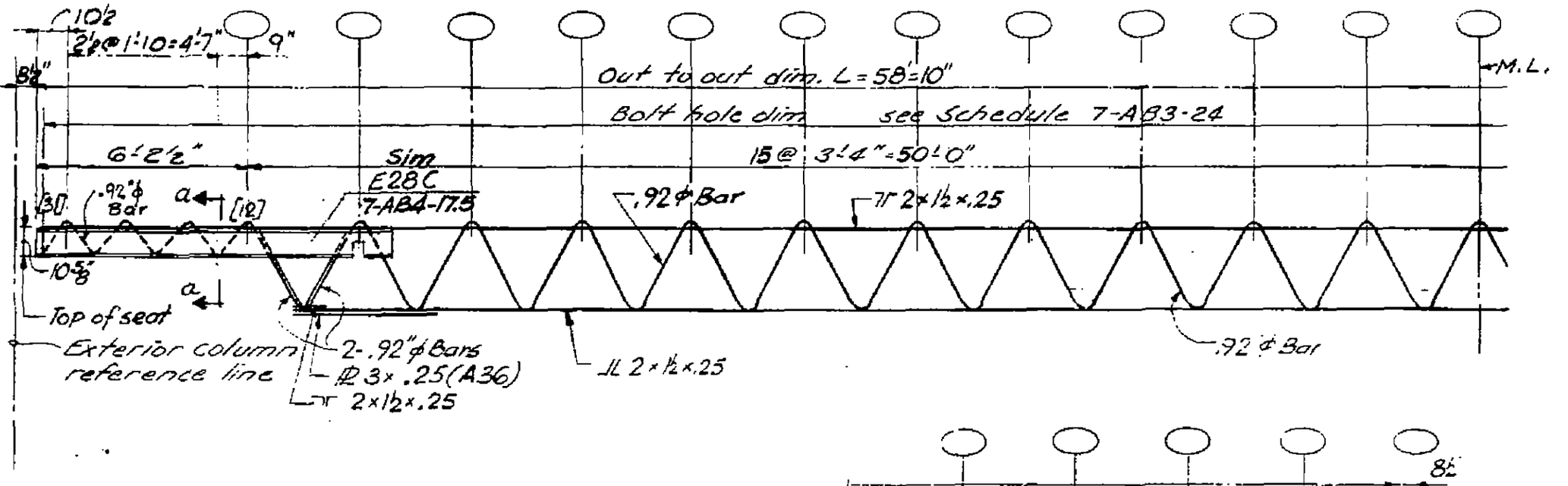

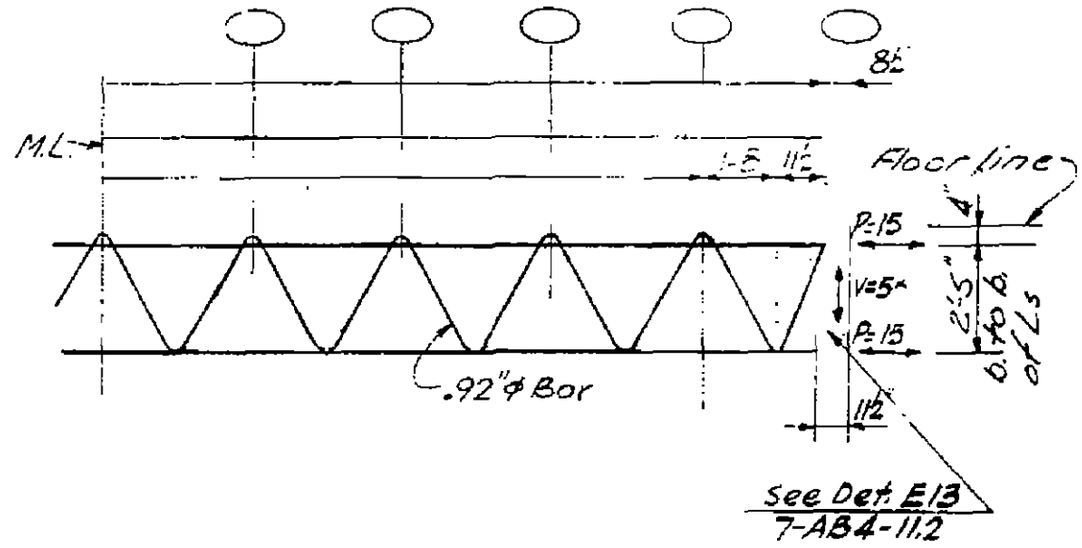

ELEVATION C32 T21

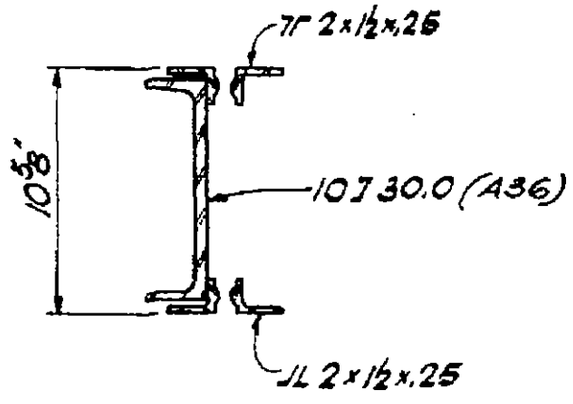

Section a-a

LICENSED PROFESSIONAL ENGINEER
LESLIE E. ROBERTSON
No. 34360
UNIVERSITY OF THE STATE OF NEW YORK

7-AB1-20

SKILLING - HELLE - CHRISTIANSEN - ROBERTSON Structural & Civil Engineers

PROJECT THE WORLD TRADE CENTER | TITLE FLOOR TRUSS C32 T22 | DATE 8-15-68

REVISIONS

10-4-68

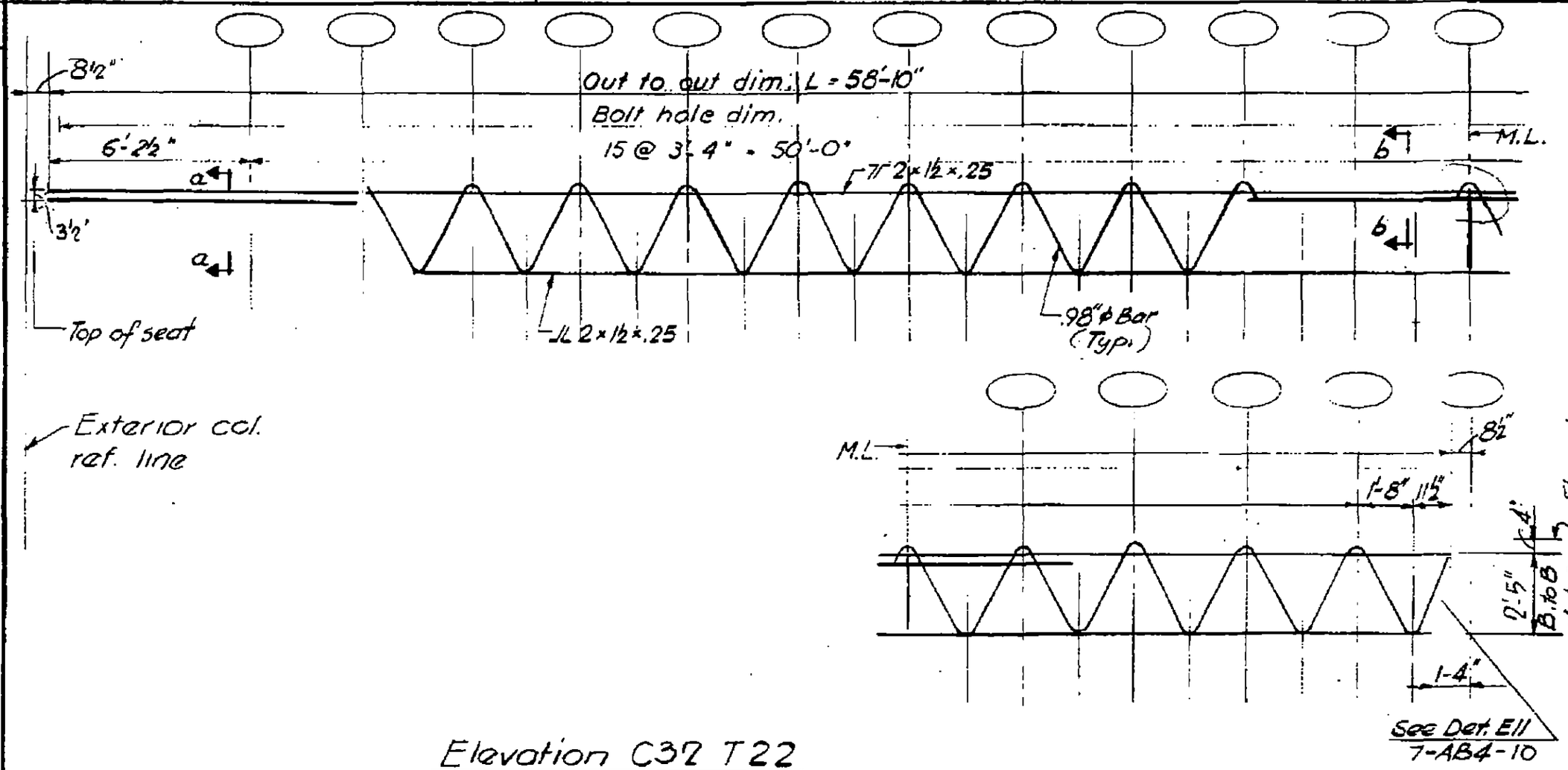

Elevation C32 T22

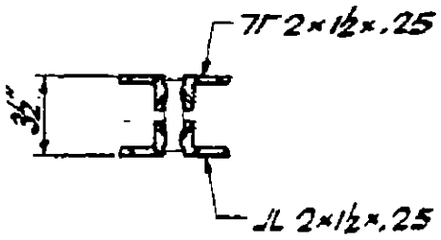

Section a-a

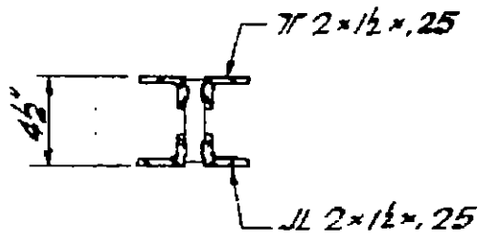

Section b-b

LICENSED PROFESSIONAL ENGINEER
LESLIE E. ROBERTSON
No. 34360
UNIVERSITY OF THE STATE OF NEW YORK

7-AB1-21

SKILLING - HELLE - CHRISTIANSEN - ROBERTSON. Structural & Civil Engineers

PROJECT THE WORLD TRADE CENTER | TITLE FLOOR TRUSS C32T23 & C32T24 | DATE 8-1-68

REVISIONS

8-15-68
10-4-68

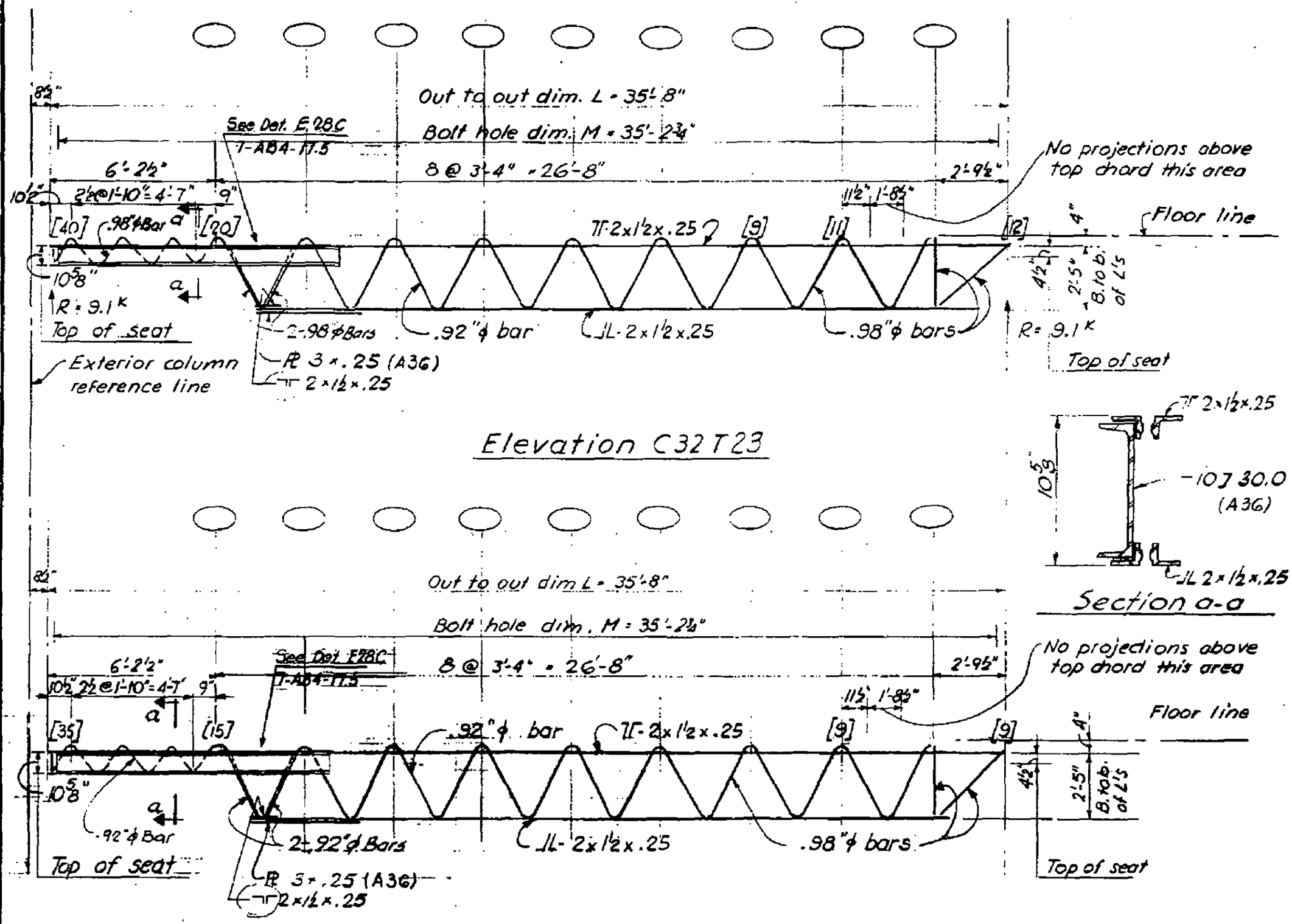

Elevation C32T23

Section a-a

Elevation C32T24

LICENSED PROFESSIONAL ENGINEER
LESLIE E. ROBERTSON
UNIVERSITY OF
No. 3439

7-AB1-22

SKILLING - HELLE - CHRISTIANSEN - ROBERTSON Structural & Civil Engineers

PROJECT THE WORLD TRADE CENTER | TITLE FLOOR TRUSS C32 T25 & C32 T26 | DATE 8-15-68

REVISIONS

10-4-68

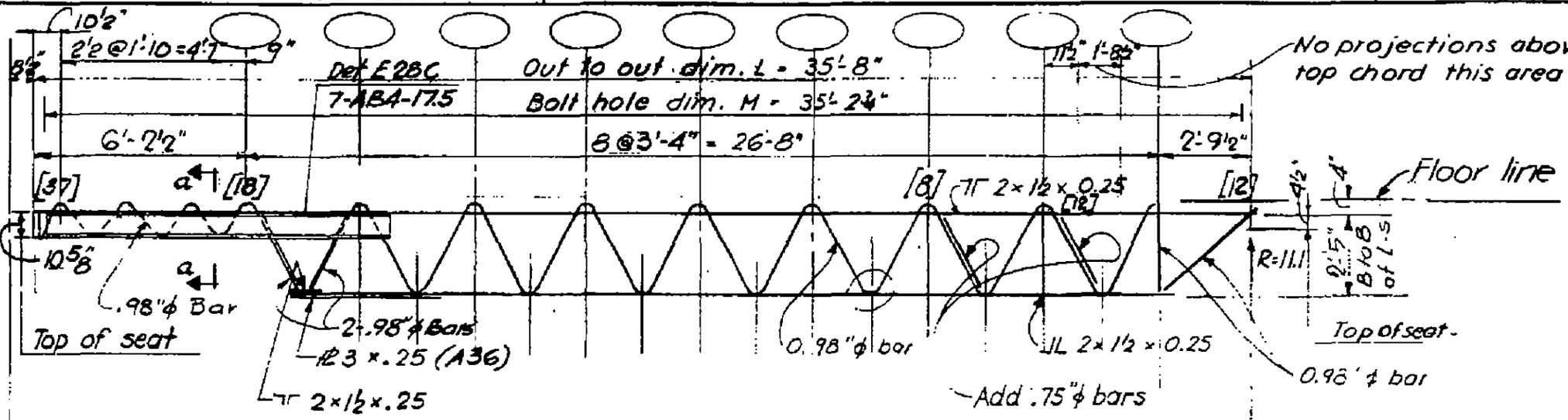

Elevation C32 T25

Ref. Exterior col. ref. line.

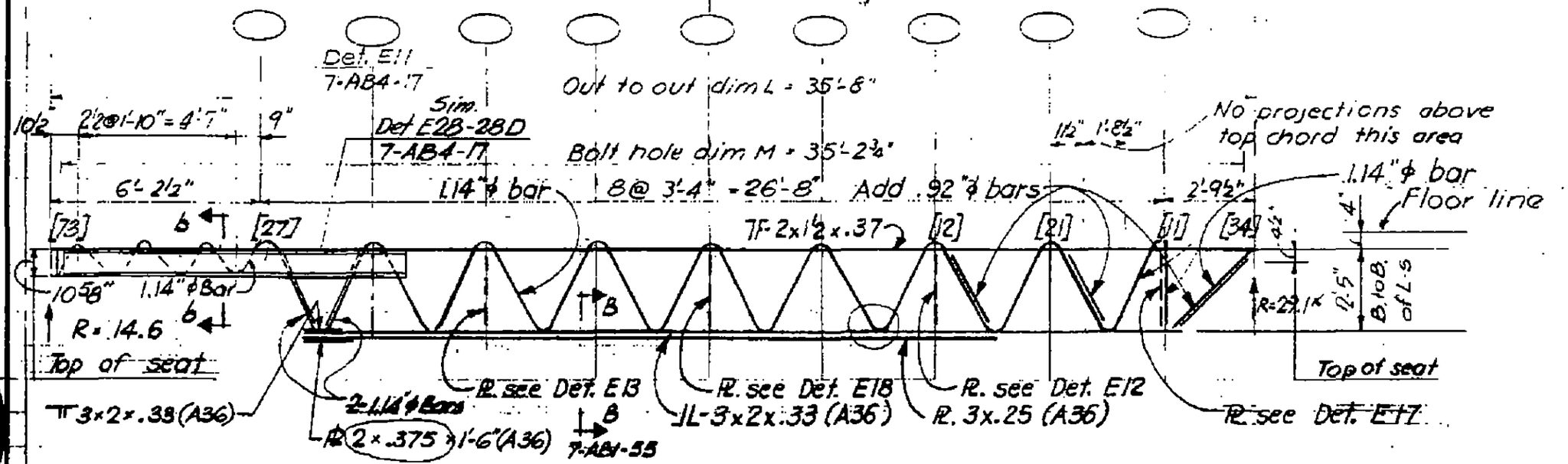

Elevation C32 T26

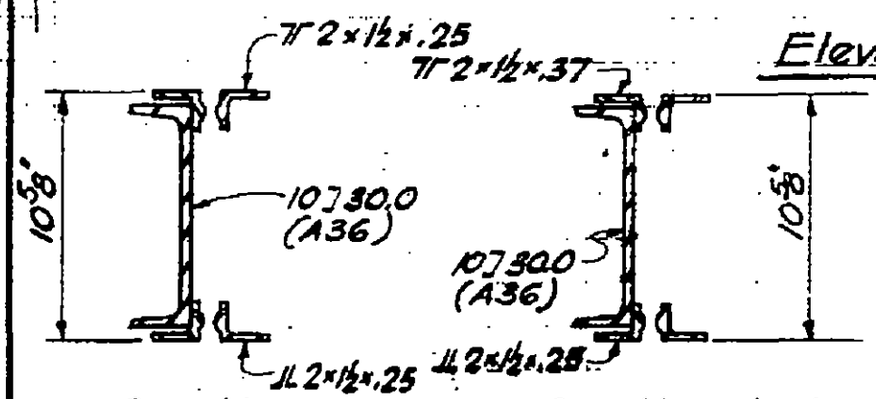

Section a-a Section b-b

7-AB1-23

SKILLING - HELLE - CHRISTIANSEN - ROBERTSON Structural & Civil Engineers

PROJECT THE WORLD TRADE CENTER | TITLE FLOOR TRUSS C 32T27 | DATE 1-6-69

REVISIONS

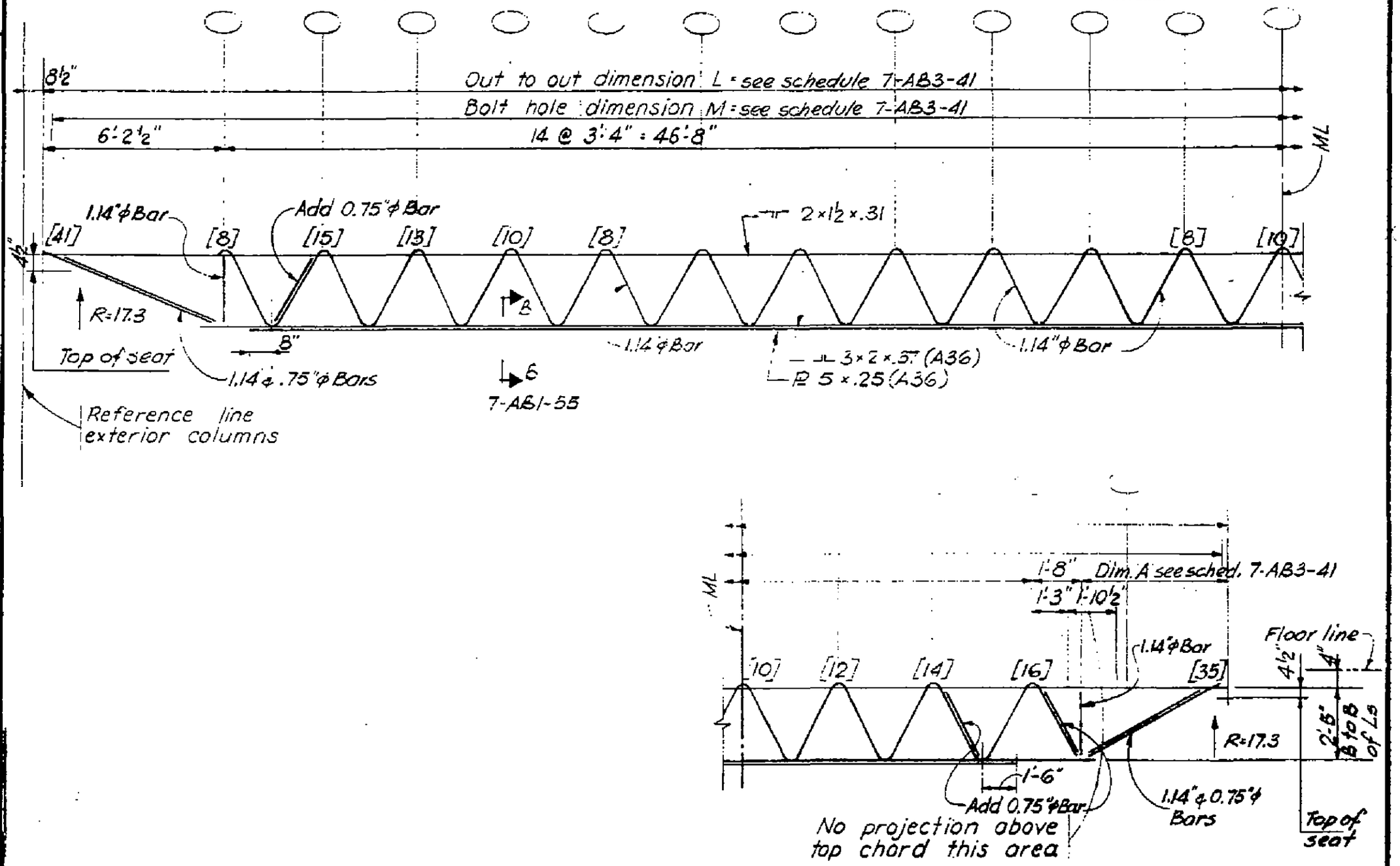

Elevation C 32T27

LICENSED PROFESSIONAL ENGINEER
LESLIE E. ROBERTSON
No. 34360
UNIVERSITY OF THE STATE OF NEW YORK

7-AB1-24

SKILLING - HELLE - CHRISTIANSEN - ROBERTSON Structural & Civil Engineers

PROJECT THE WORLD TRADE CENTER | TITLE FLOOR TRUSS C32T28 | DATE 1-6-69

REVISIONS

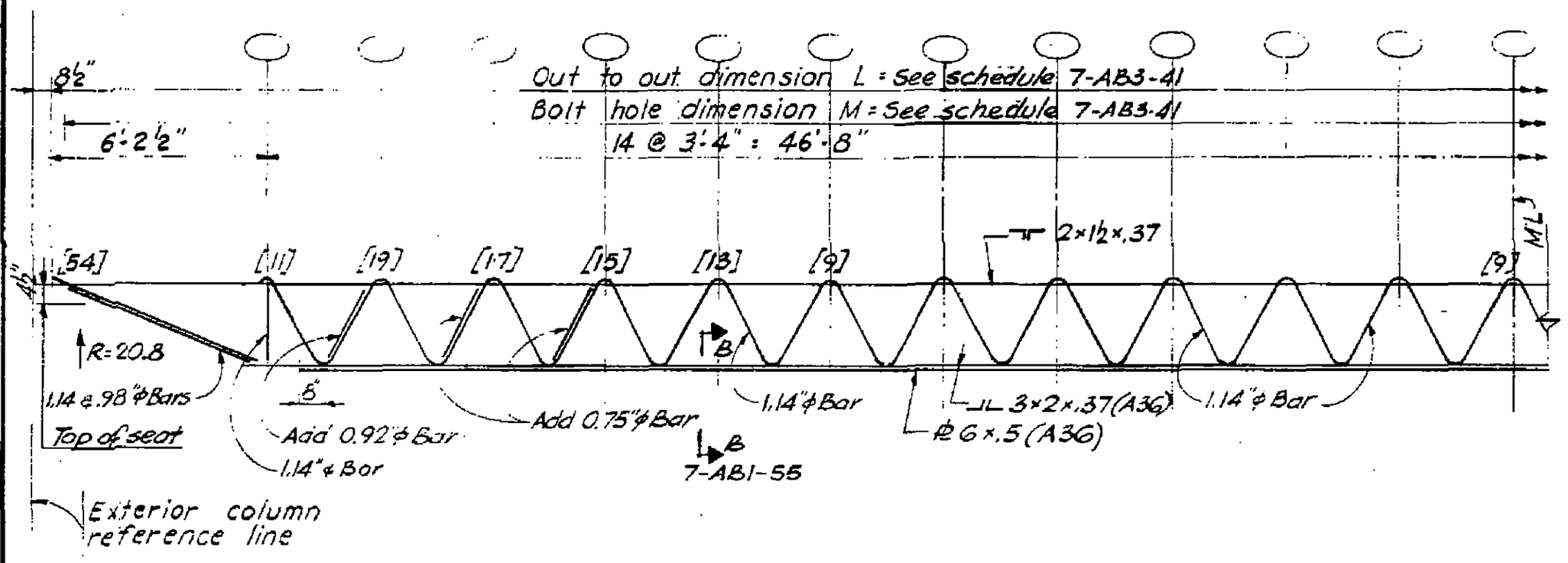

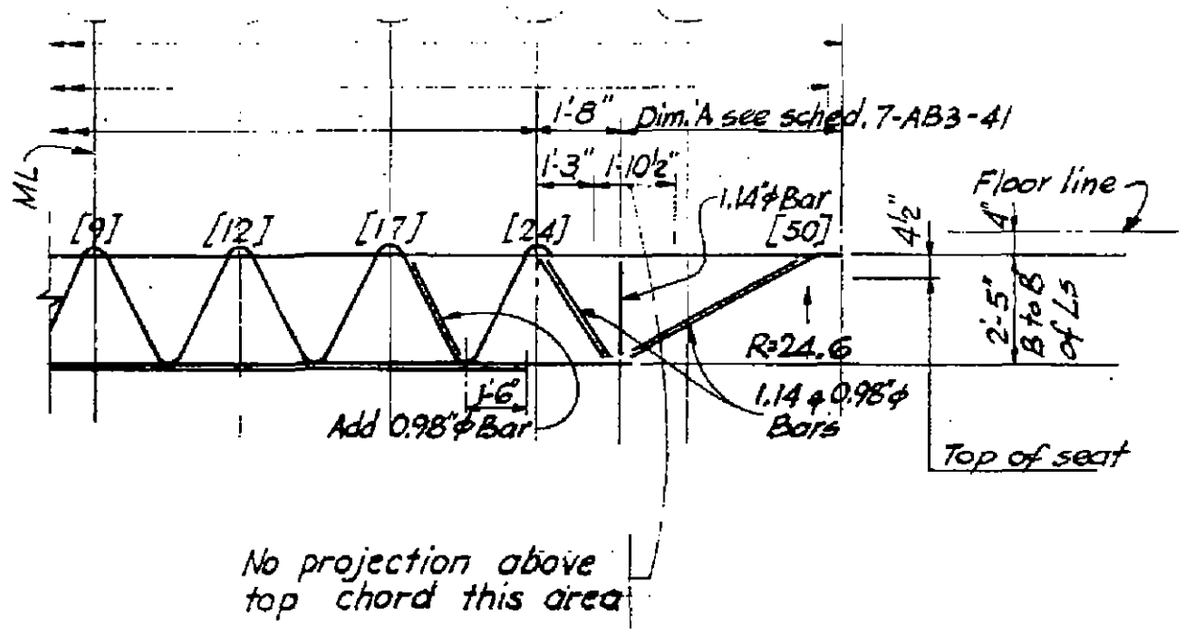

Elevation C 32T28

LICENSED PROFESSIONAL ENGINEER LESLIE E. ROBERTSON NO. 34360 UNIVERSITY OF THE STATE OF NEW YORK

5

7-AB1-25

SKILLING - HELLE - CHRISTIANSEN - ROBERTSON Structural & Civil Engineers

PROJECT ...THE WORLD TRADE CENTER | TITLE FLOOR TRUSS C32T29 | DATE 1-6-69

REVISIONS

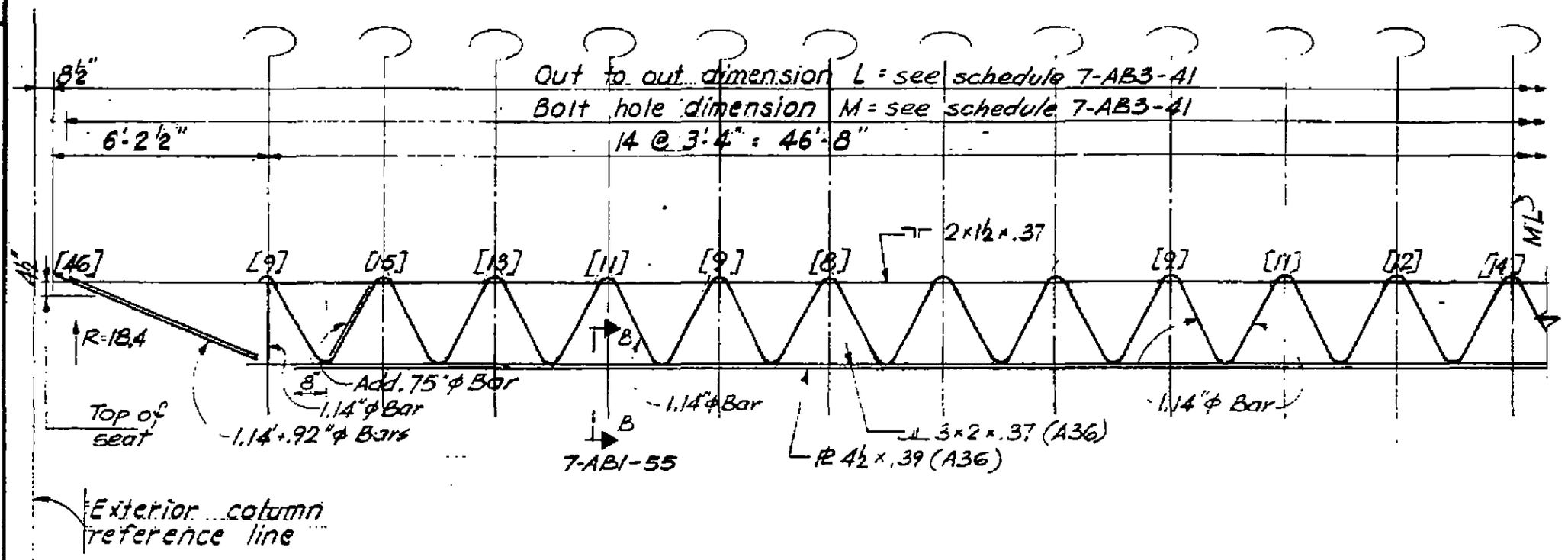

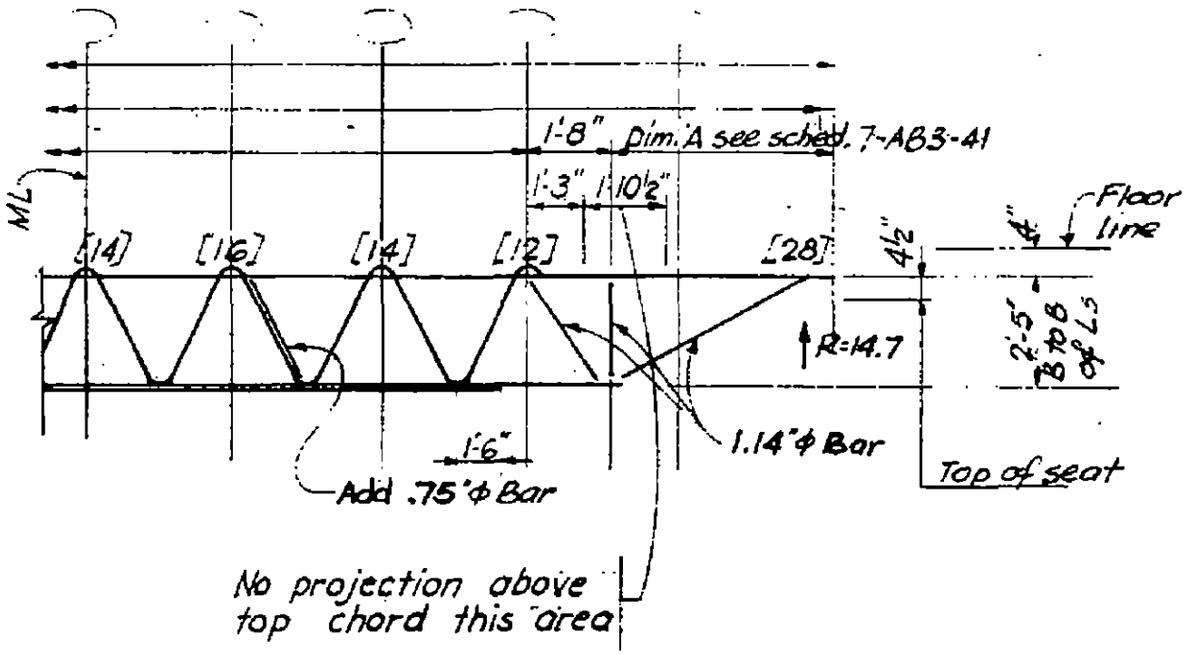

Elevation C32T29

LICENSED PROFESSIONAL ENGINEER
LESLIE E. ROBERTSON
No. 34360
UNIVERSITY OF THE STATE OF NEW YORK

7-AB1-26

6

SKILLING - HELLE - CHRISTIANSEN - ROBERTSON Structural & Civil Engineers

PROJECT THE WORLD TRADE CENTER | TITLE FLOOR TRUSS C32T30 | DATE 1-6-69

REVISIONS

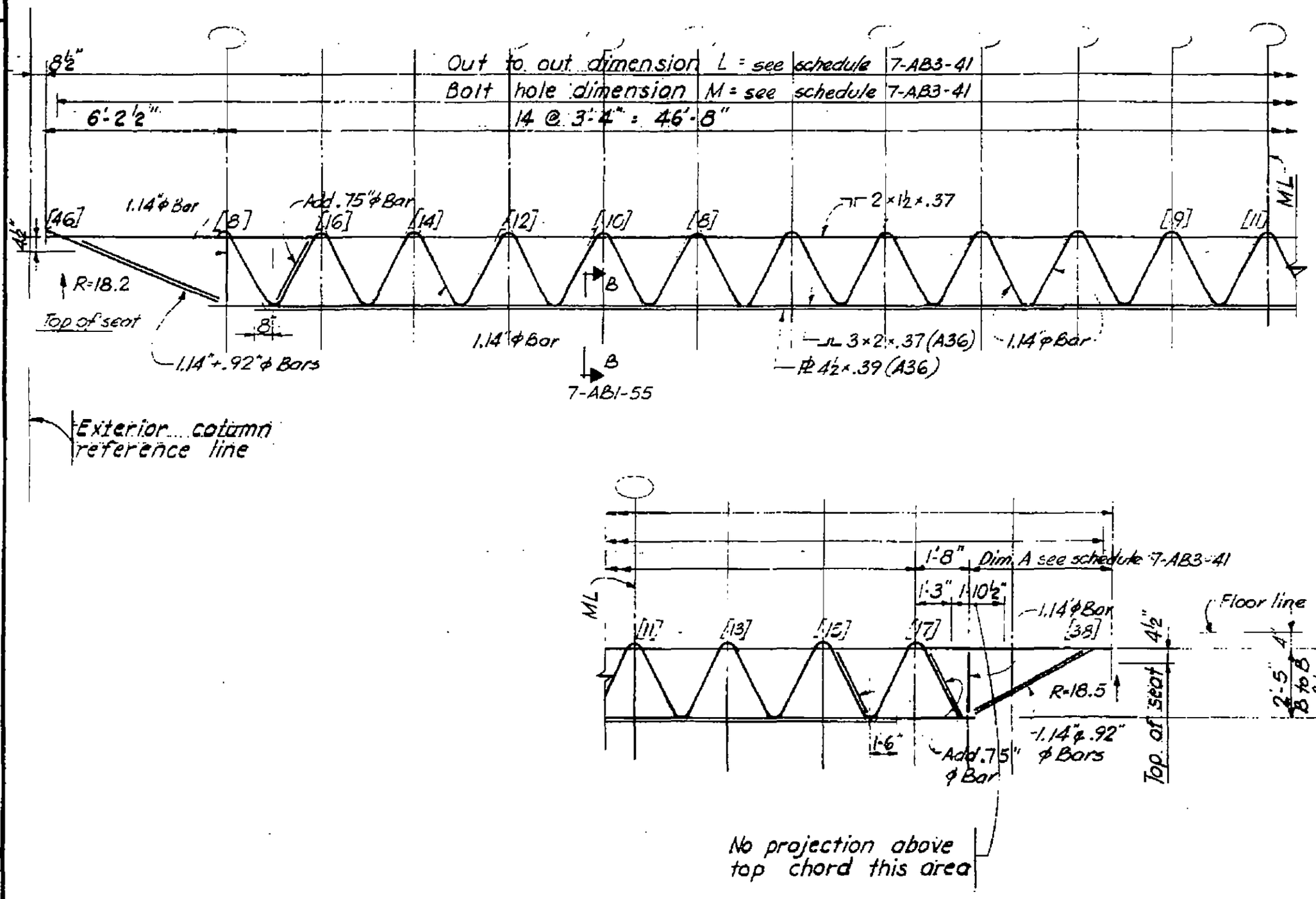

Elevation C32T30

LICENSED PROFESSIONAL ENGINEER
LESLIE E. ROBERTSON
No. 34360
UNIVERSITY OF THE STATE OF NEW YORK

7-AB1-27

SKILLING - HELLE - CHRISTIANSEN - ROBERTSON Structural & Civil Engineers

PROJECT THE WORLD TRADE CENTER | TITLE FLOOR TRUSS C32T31 | DATE 1-6-69

REVISIONS

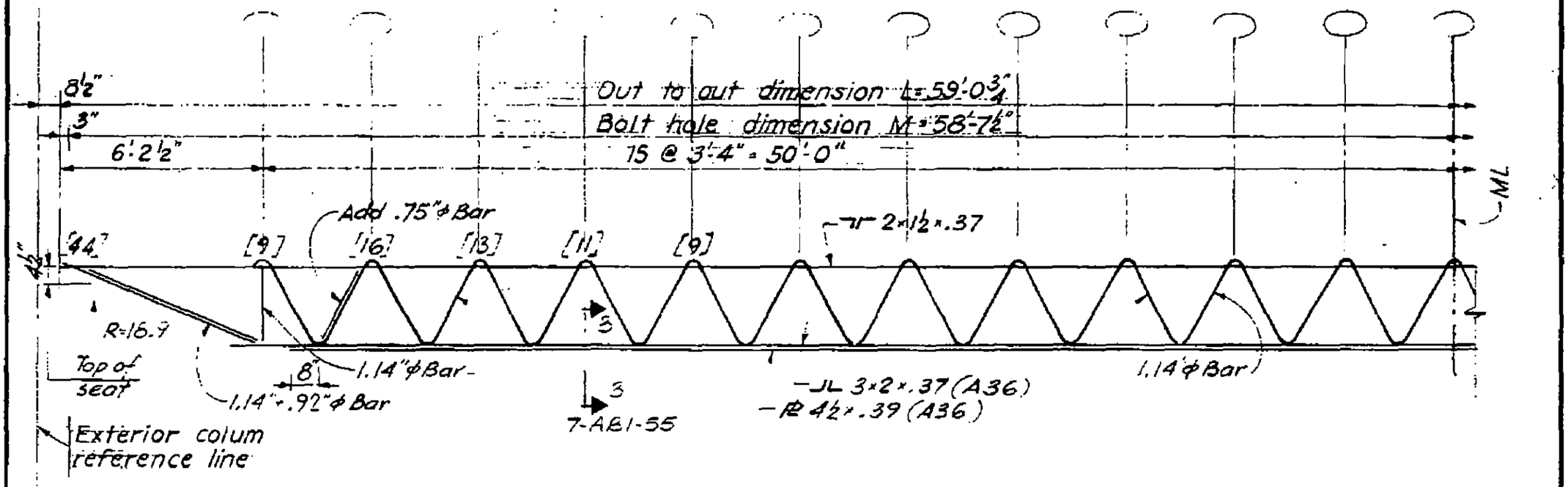

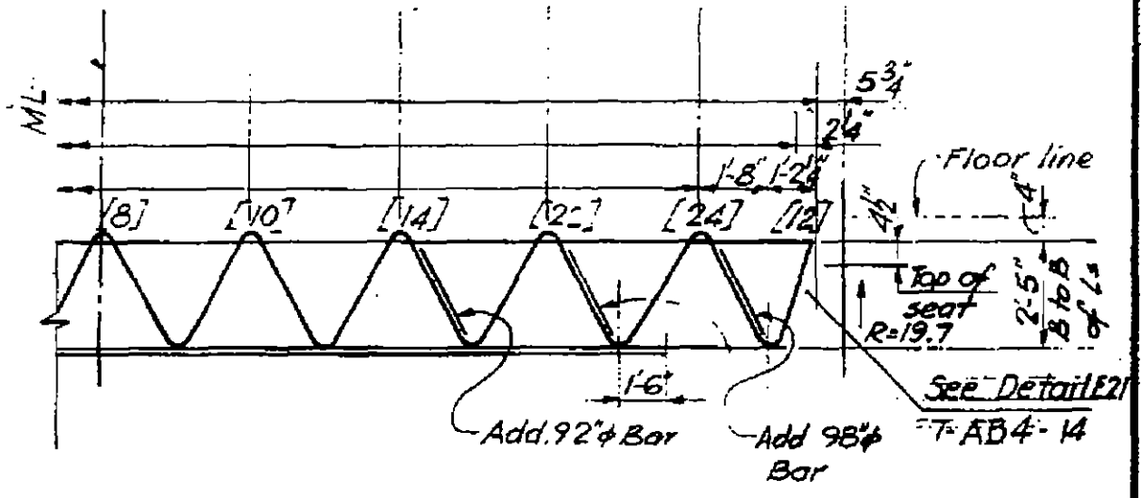

Elevation C32T31

LICENSED PROFESSIONAL ENGINEER
LESLIE E. ROBERTSON
No. 34360
UNIVERSITY OF THE STATE OF NEW YORK

SKILLING - HELLE - CHRISTIANSEN - ROBERTSON Structural & Civil Engineers

PROJECT THE WORLD TRADE CENTER | TITLE - FLOOR TRUSS C 32 T 32 | DATE 1-6-69

REVISIONS

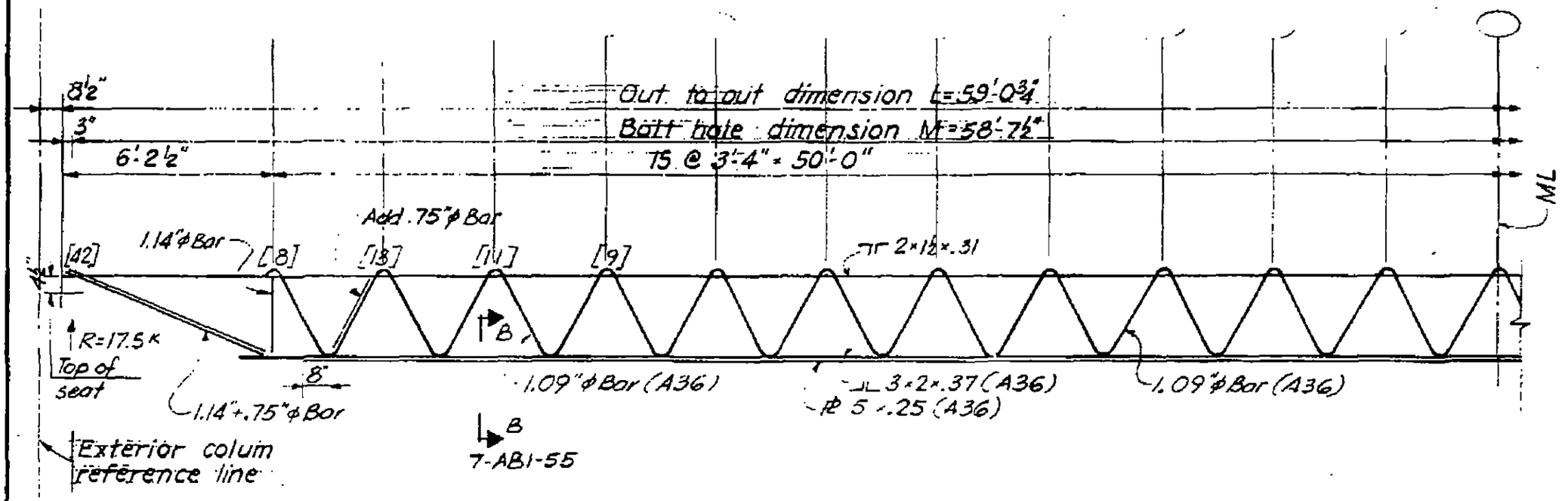

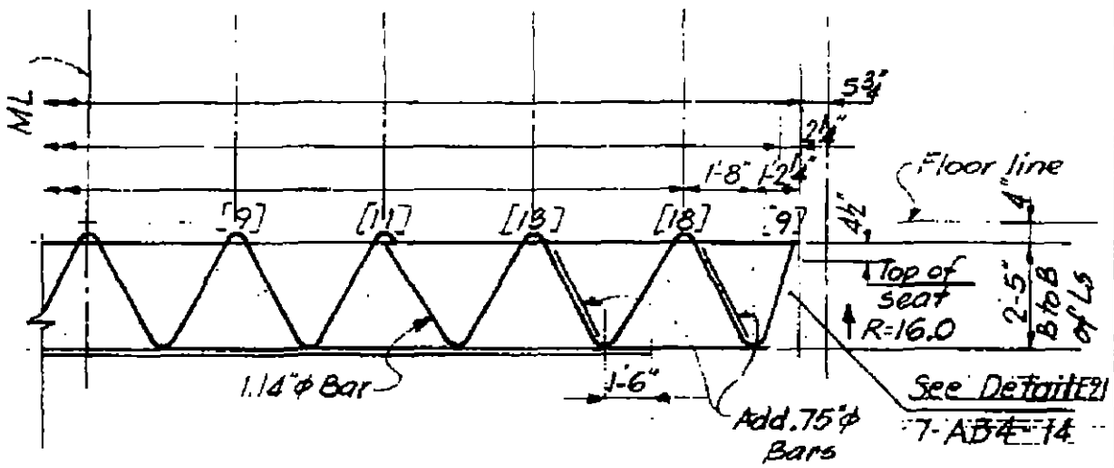

Elevation C32T32

LICENSED PROFESSIONAL ENGINEER LESLIE E. ROBERTSON NEW YORK UNIVERSITY

7-AB1-29

SKILLING - HELLE - CHRISTIANSEN - ROBERTSON Structural & Civil Engineers

PROJECT THE WORLD TRADE CENTER | TITLE FLOOR TRUSS C32T33 | DATE 1-6-69

REVISIONS

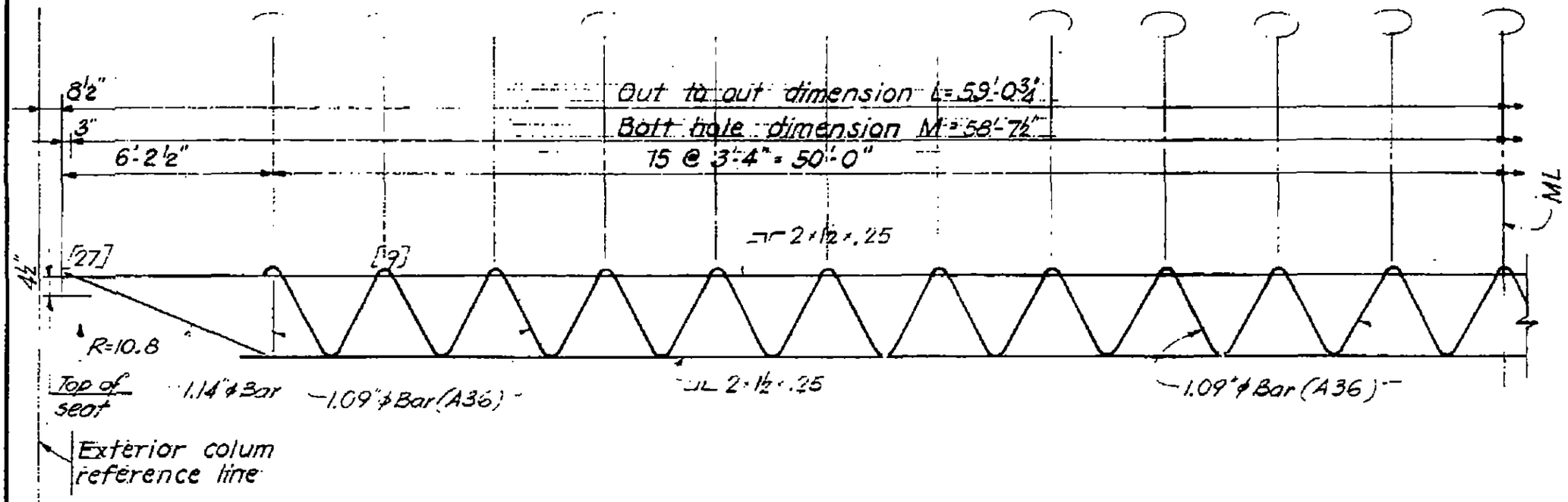

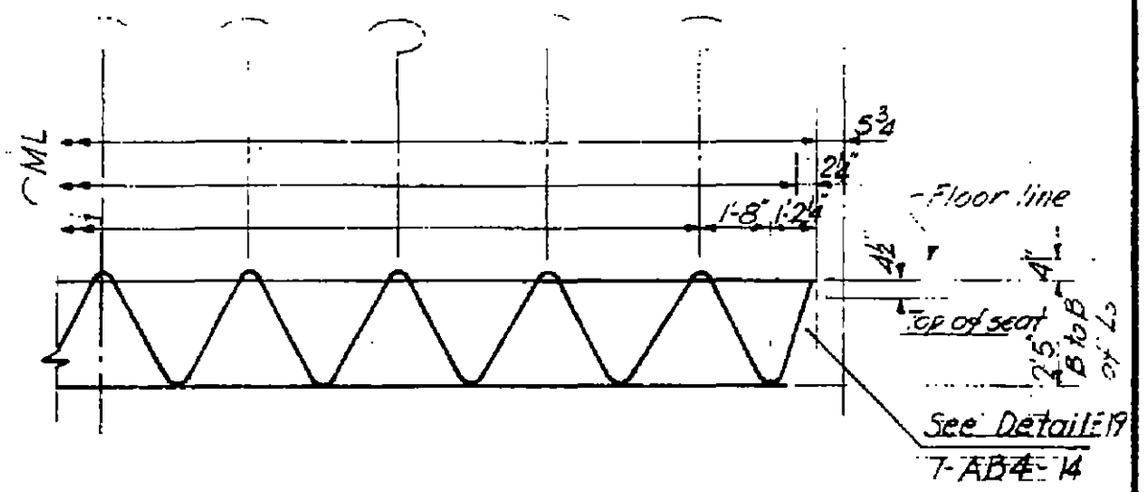

Elevation C32T33

LICENSED PROFESSIONAL ENGINEER
LESLIE E. ROBERTSON
No. 34360
UNIVERSITY OF THE STATE OF NEW YORK

7-AB1-30

SKILLING - HELLE - CHRISTIANSEN - ROBERTSON Structural & Civil Engineers

PROJECT THE WORLD TRADE CENTER | TITLE FLOOR TRUSS C 32 T 34 | DATE 1-6-69

REVISIONS

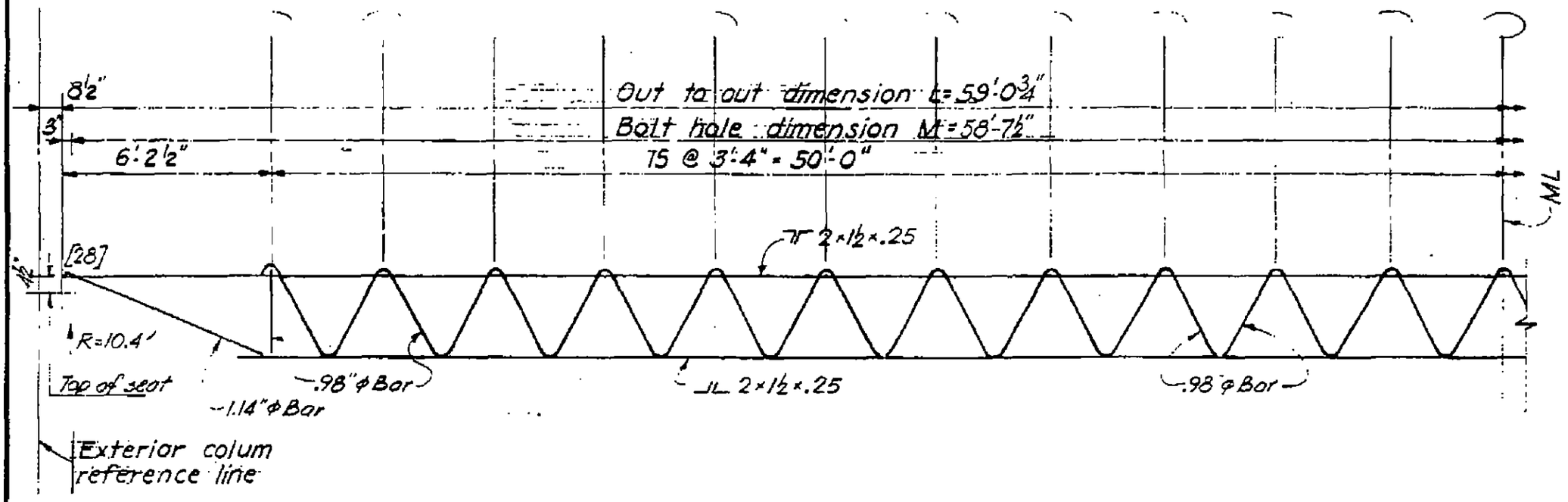

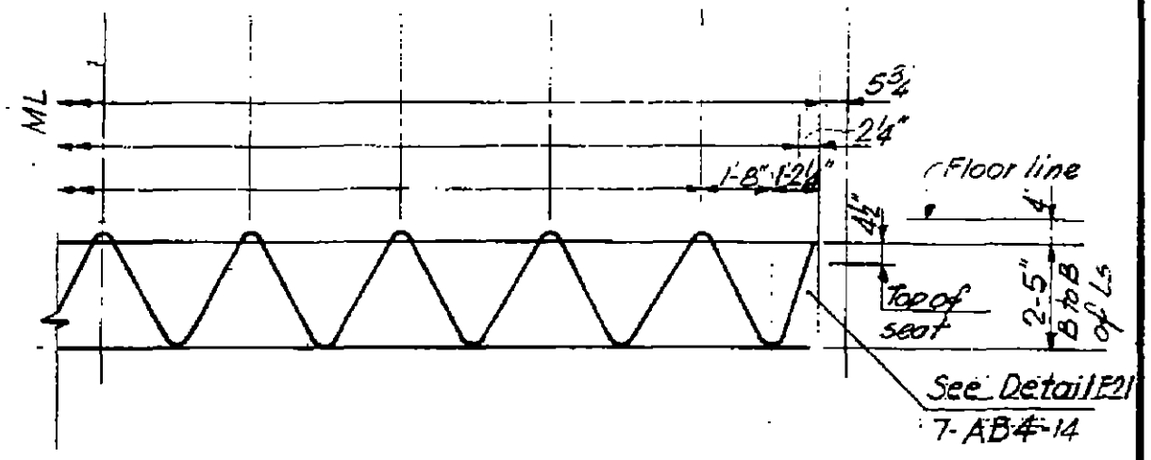

Elevation C32T34

LICENSED PROFESSIONAL ENGINEER
LESLIE E. ROBERTSON
No. 34360
UNIVERSITY OF THE STATE OF NEW YORK

7-AB1-31

SKILLING, HELLE, CHRISTIANSEN, ROBERTSON — Structural & Civil Engineers

PROJECT: THE WORLD TRADE CENTER | TITLE: FLOOR TRUSS C32T36 | DATE: 1-6-69

REVISIONS

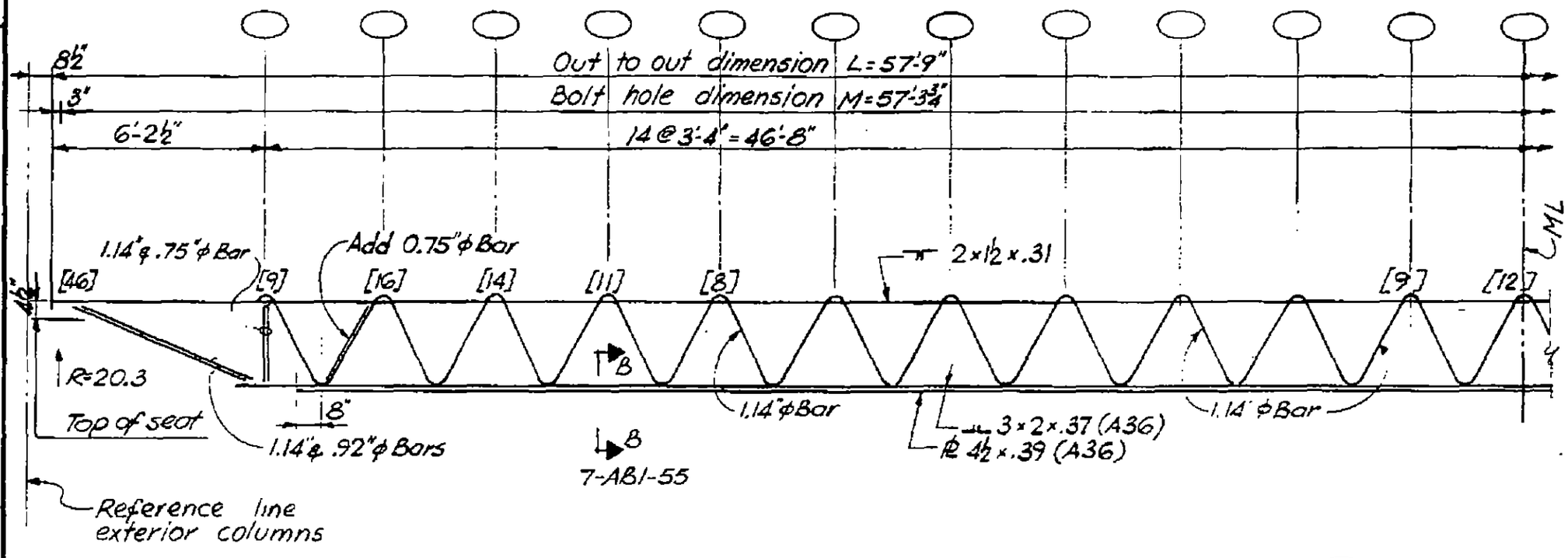

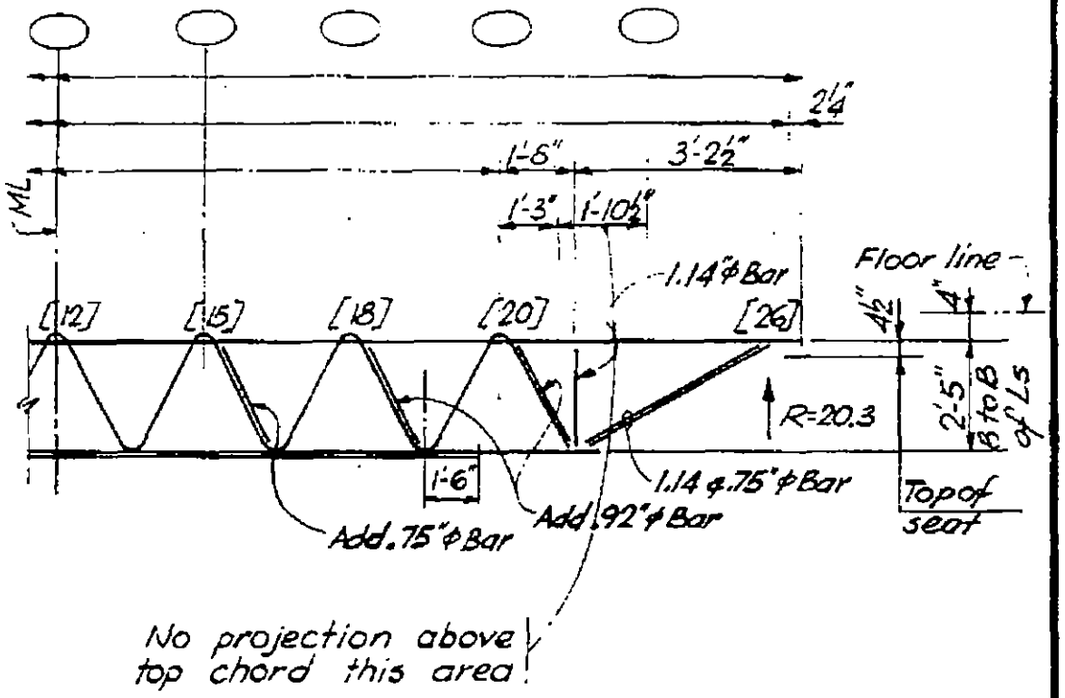

Elevation C 32T36

LICENSED PROFESSIONAL ENGINEER — LESLIE E. ROBERTSON — No. 34360 — UNIVERSITY OF THE STATE OF NEW YORK

DESIGNED

DRAWN

REVIEWED

12

7-AB1-32

SKILLING, HELLE, CHRISTIANSEN, ROBERTSON — Structural & Civil Engineers

PROJECT: THE WORLD TRADE CENTER | TITLE: FLOOR TRUSS C32T37 | DATE: 1-6-69

REVISIONS

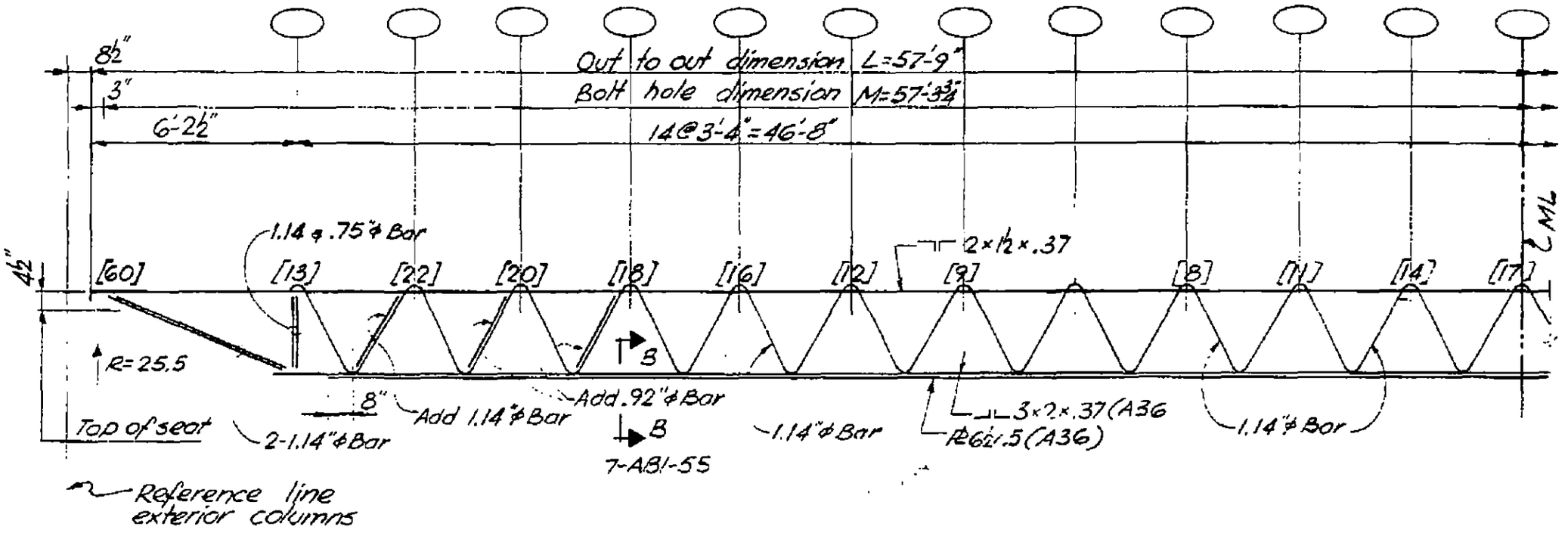

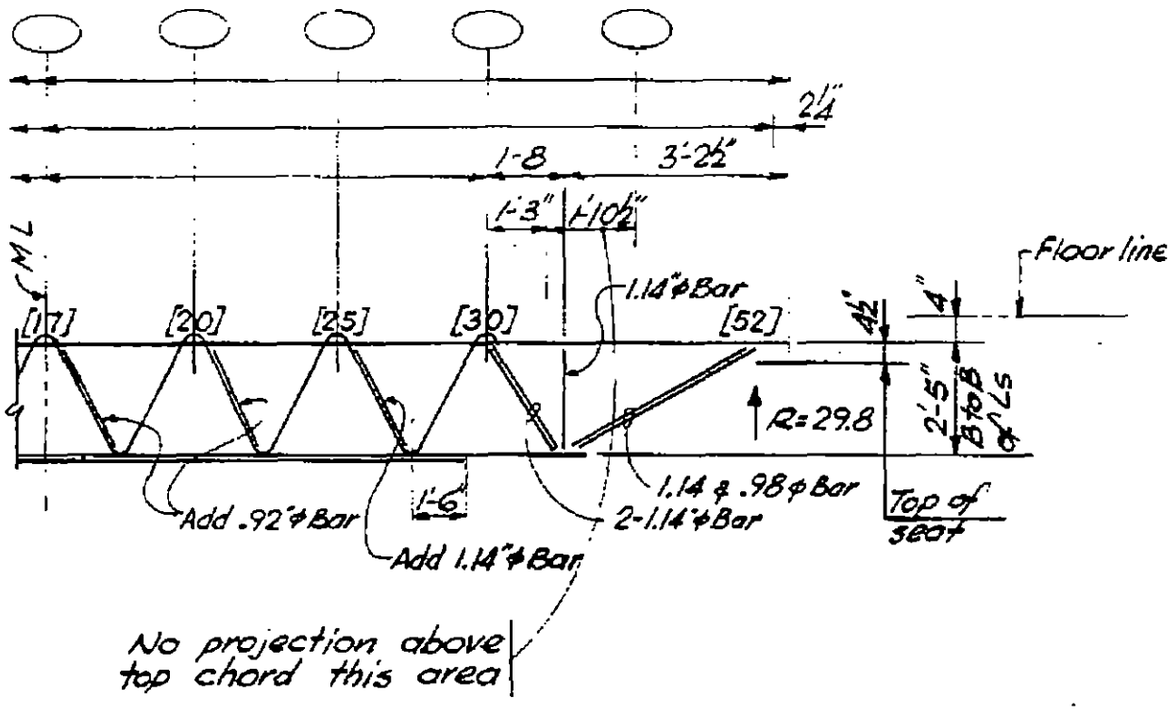

Elevation C32T37

LICENSED PROFESSIONAL ENGINEER
LESLIE E. ROBERTSON
No. 34360
UNIVERSITY OF THE STATE OF NEW YORK

DESIGNED

DRAWN

REVIEWED

13

7-AB1-33

SKILLING, HELLE, CHRISTIANSEN, ROBERTSON — Structural & Civil Engineers

PROJECT: THE WORLD TRADE CENTER | TITLE: FLOOR TRUSS C32T38 | DATE: 1-6-69

REVISIONS

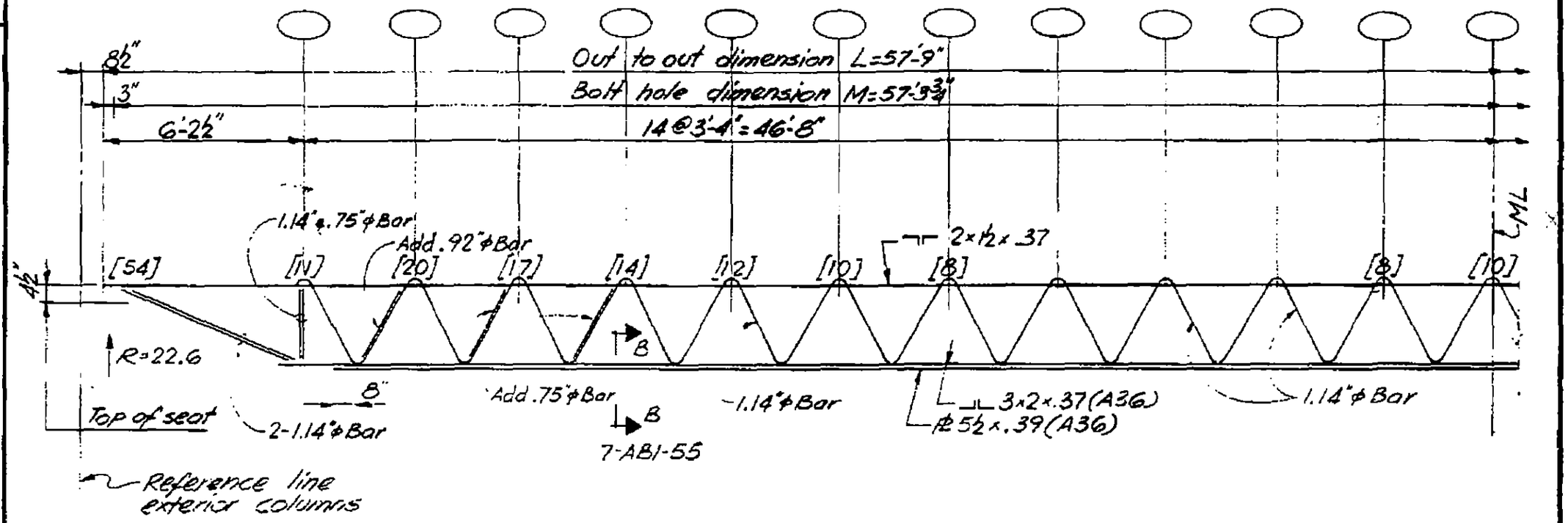

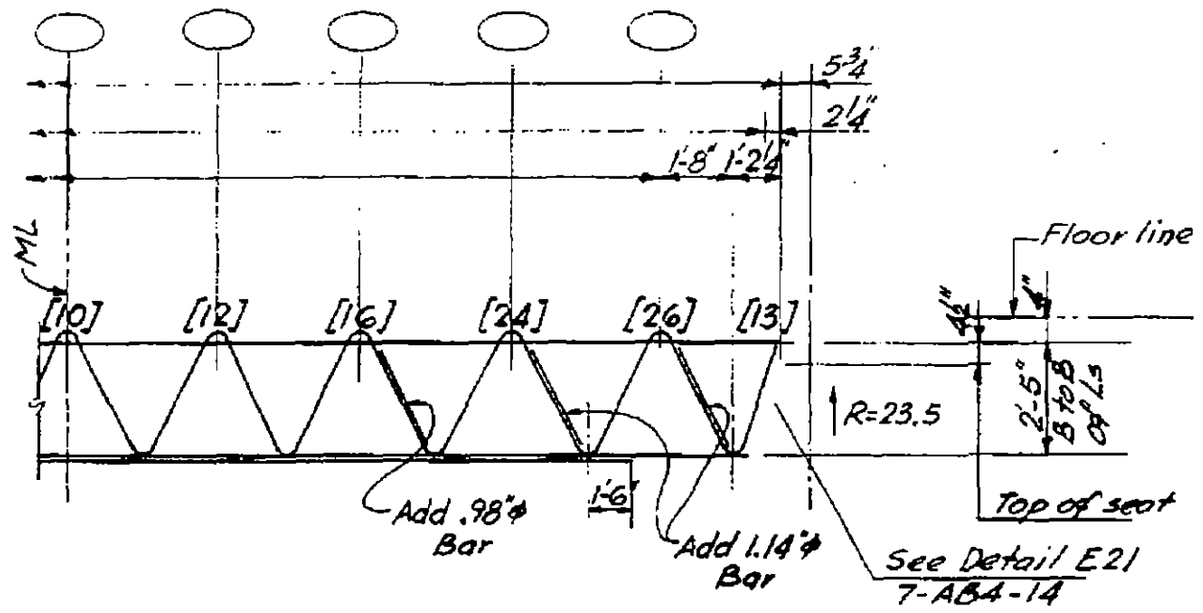

LICENSED PROFESSIONAL ENGINEER — LESLIE E. ROBERTSON — No. 34360 — UNIVERSITY OF THE STATE OF NEW YORK

DESIGNED

DRAWN

REVIEWED

Elevation C32T38

7-AB1-34

SKILLING, HELLE, CHRISTIANSEN, ROBERTSON — Structural & Civil Engineers

PROJECT: THE WORLD TRADE CENTER | TITLE: FLOOR TRUSS C32T39 | DATE: 1-6-69

REVISIONS

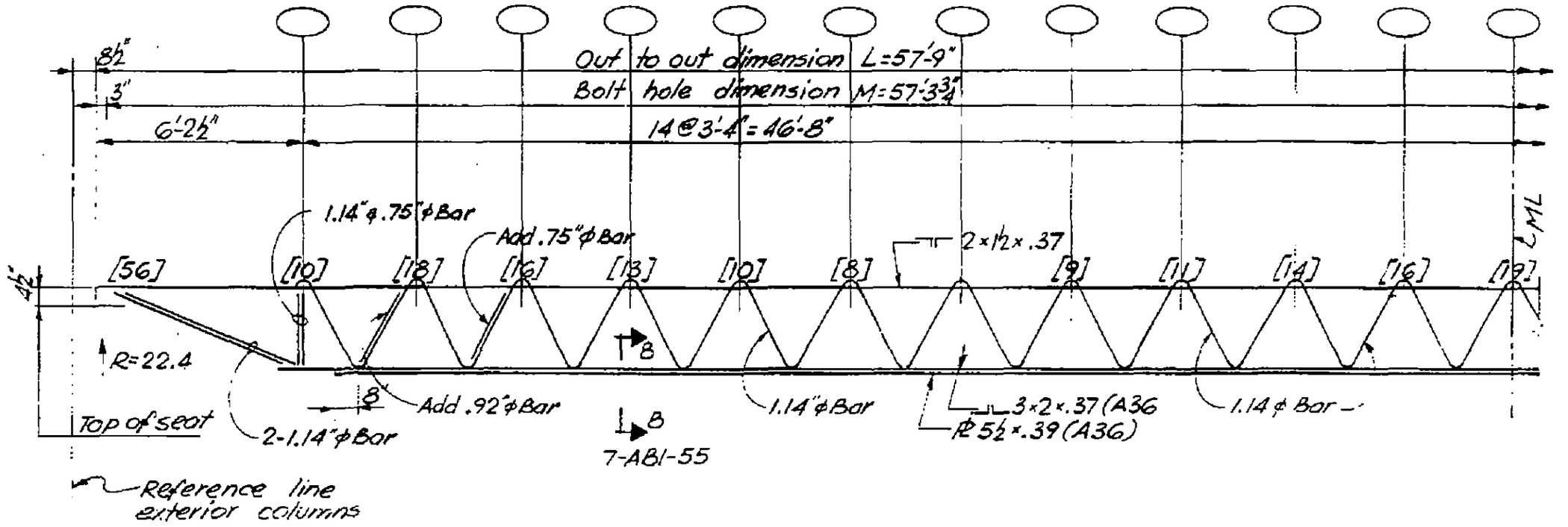

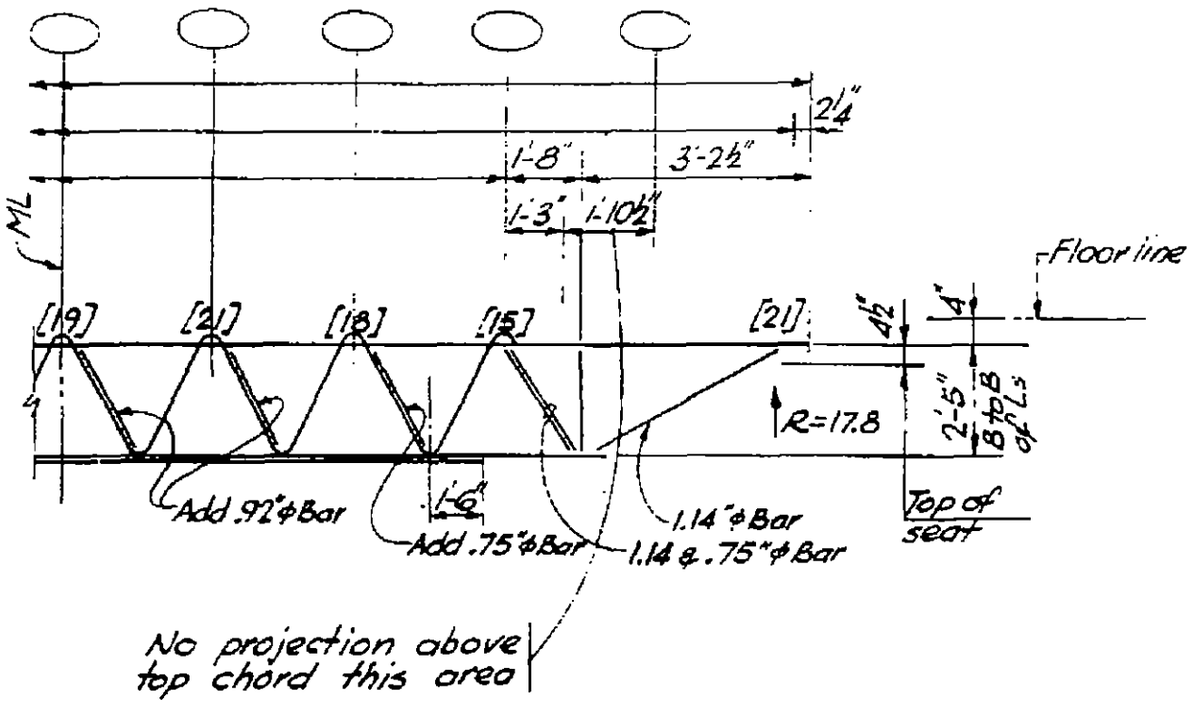

Elevation C32T39

LICENSED PROFESSIONAL ENGINEER
LESLIE E. ROBERTSON
No. 34360
UNIVERSITY OF THE STATE OF NEW YORK

DESIGNED

DRAWN

REVIEWED

15

7-AB1-35

SKILLING, HELLE, CHRISTIANSEN, ROBERTSON — Structural & Civil Engineers

PROJECT: THE WORLD TRADE CENTER | TITLE: FLOOR TRUSS C32T40 | DATE: 1-6-69

REVISIONS

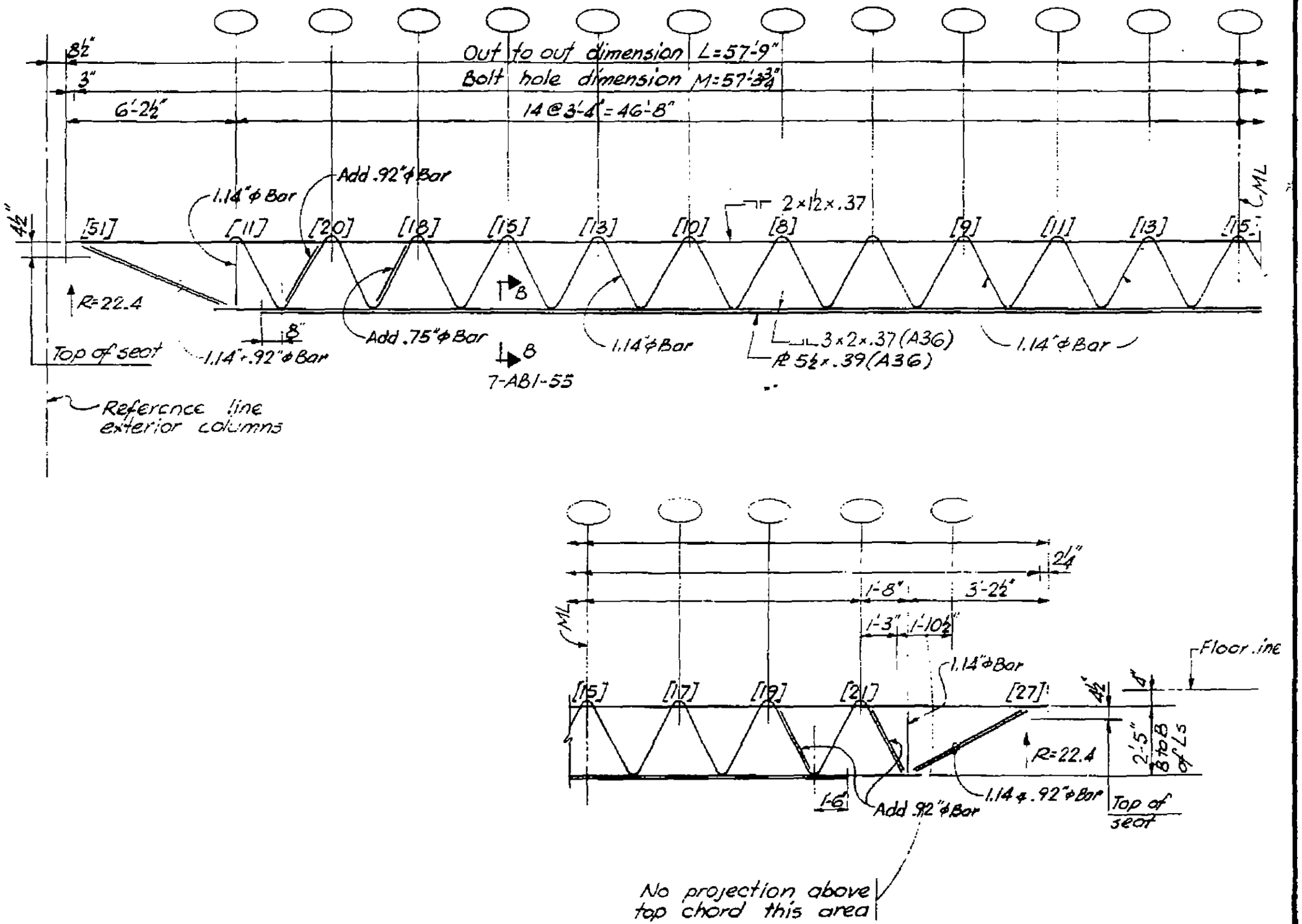

Elevation C32T40

LICENSED PROFESSIONAL ENGINEER — LESLIE E. ROBERTSON — No. 34360 — UNIVERSITY OF THE STATE OF NEW YORK

DESIGNED

DRAWN

REVIEWED

16

7-AB1-36

SKILLING - HELLE - CHRISTIANSEN - ROBERTSON Structural & Civil Engineers

PROJECT THE WORLD TRADE CENTER | TITLE FLOOR TRUSS C32T49 | DATE 11-25-68

REVISIONS

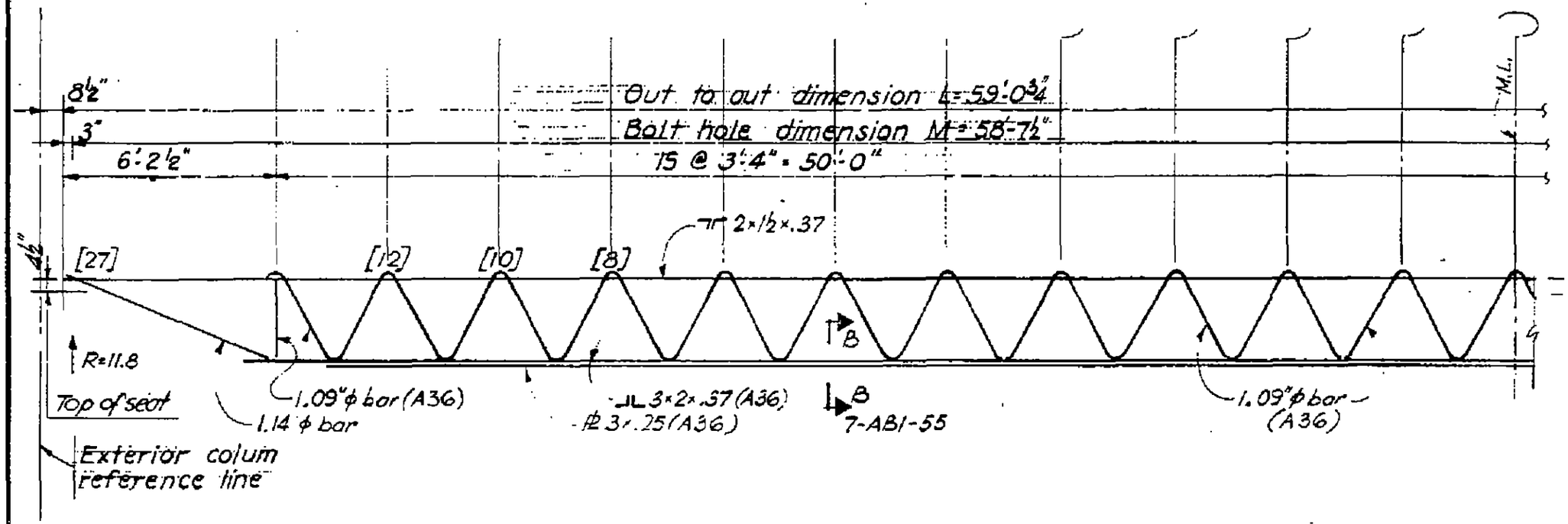

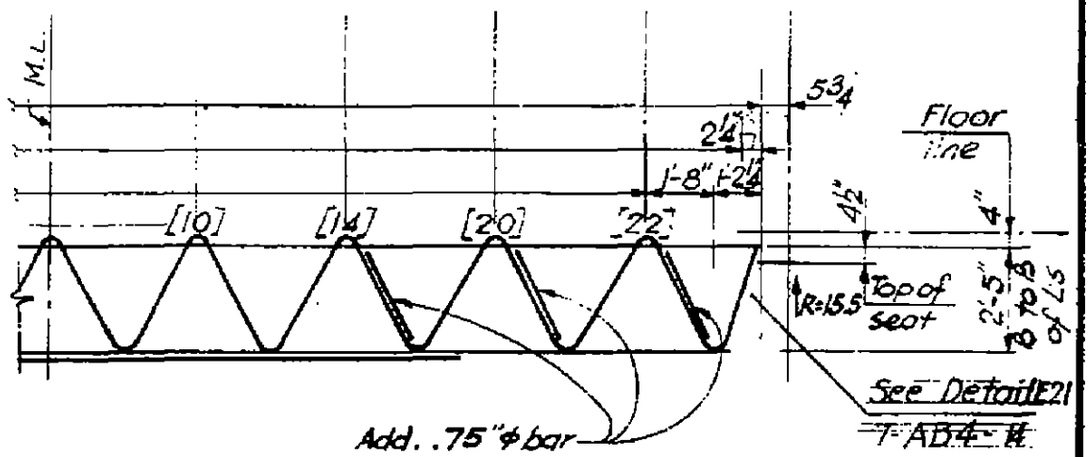

Elevation C 32 T 49

LICENSED PROFESSIONAL ENGINEER
LESLIE E. ROBERTSON
No. 34360
UNIVERSITY OF THE STATE OF NEW YORK

7-AB1-44

SKILLING - HELLE - CHRISTIANSEN - ROBERTSON Structural & Civil Engineers

PROJECT THE WORLD TRADE CENTER | TITLE FLOOR TRUSS C32T50 | DATE 11-25-68

REVISIONS

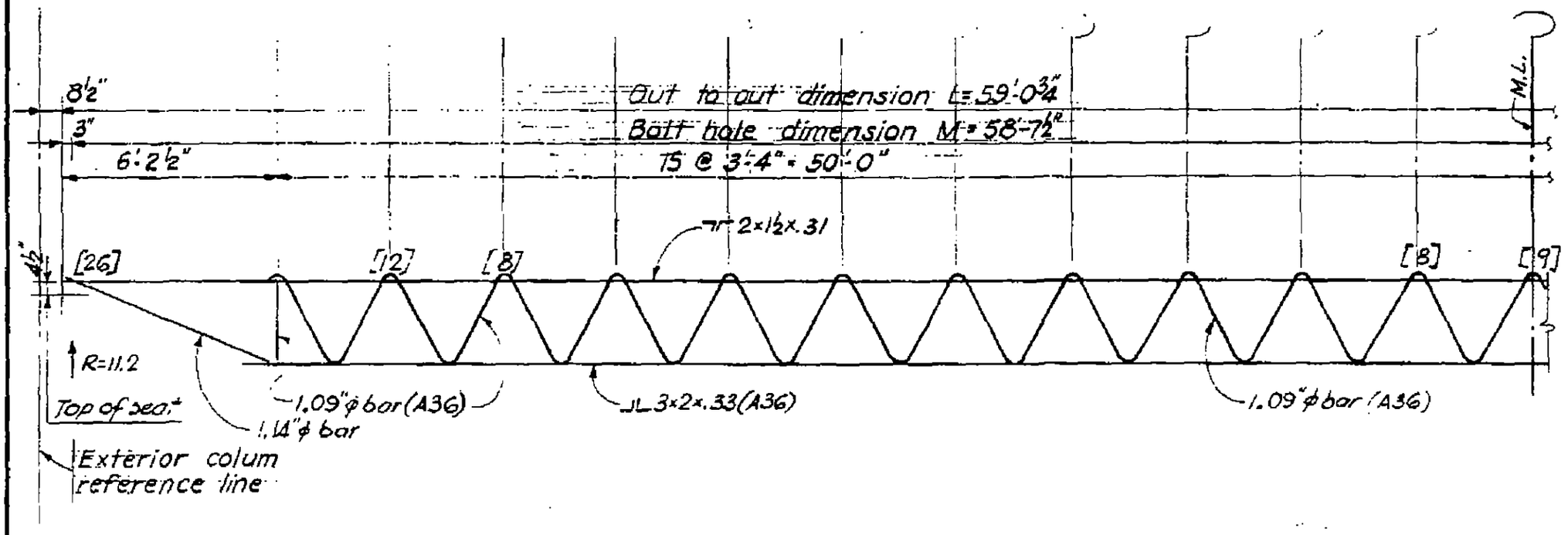

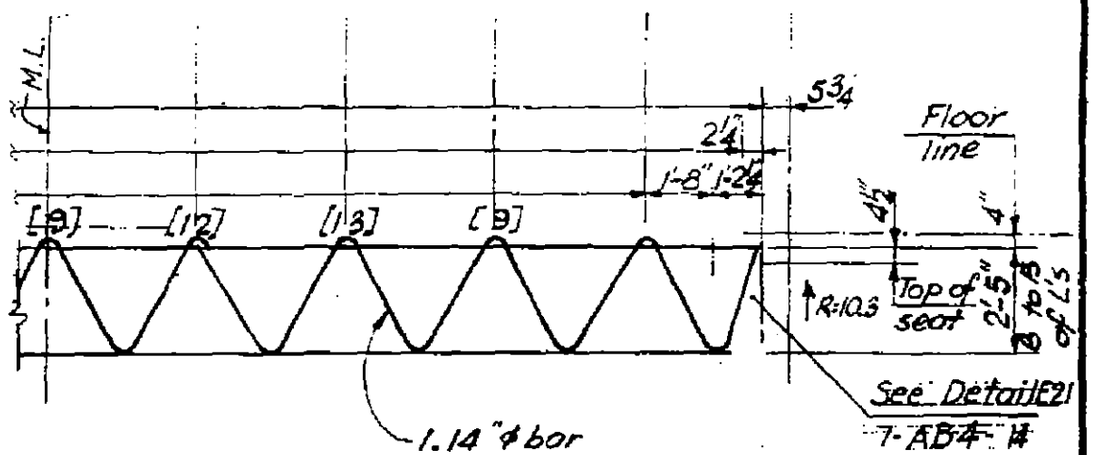

Elevation C 32 T50

7-AB1-45

SKILLING - HELLE - CHRISTIANSEN - ROBERTSON Structural & Civil Engineers

PROJECT THE WORLD TRADE CENTER | TITLE FLOOR TRUSS C 32 T 51 | DATE 11-25-68

REVISIONS

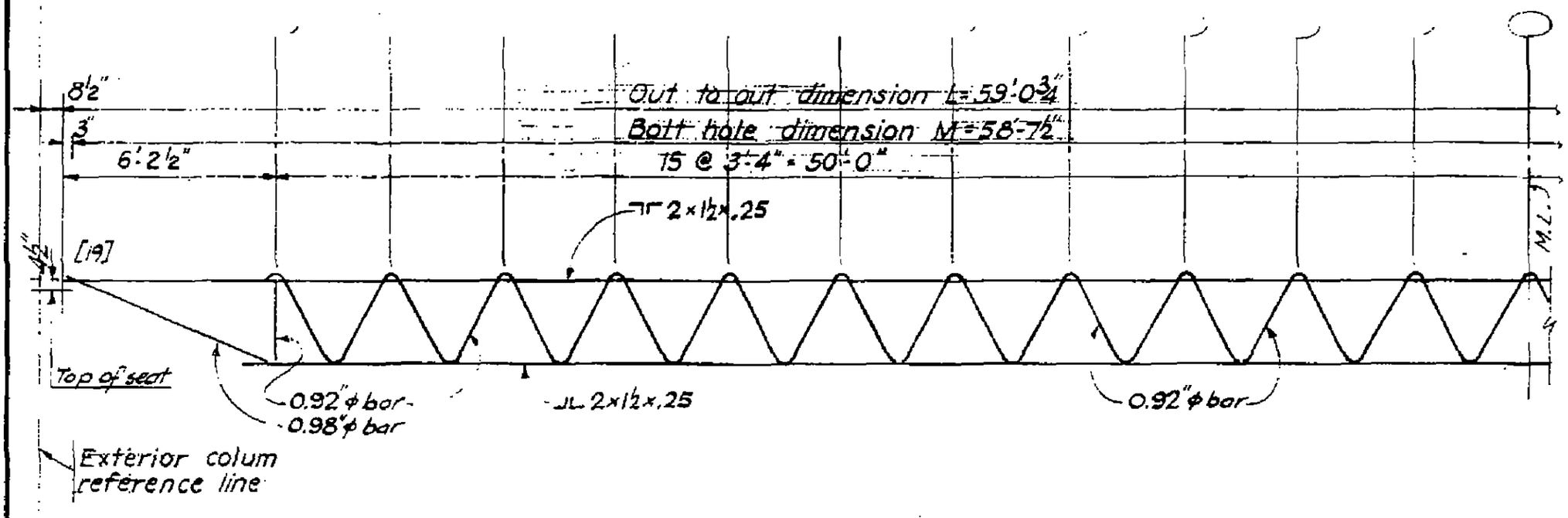

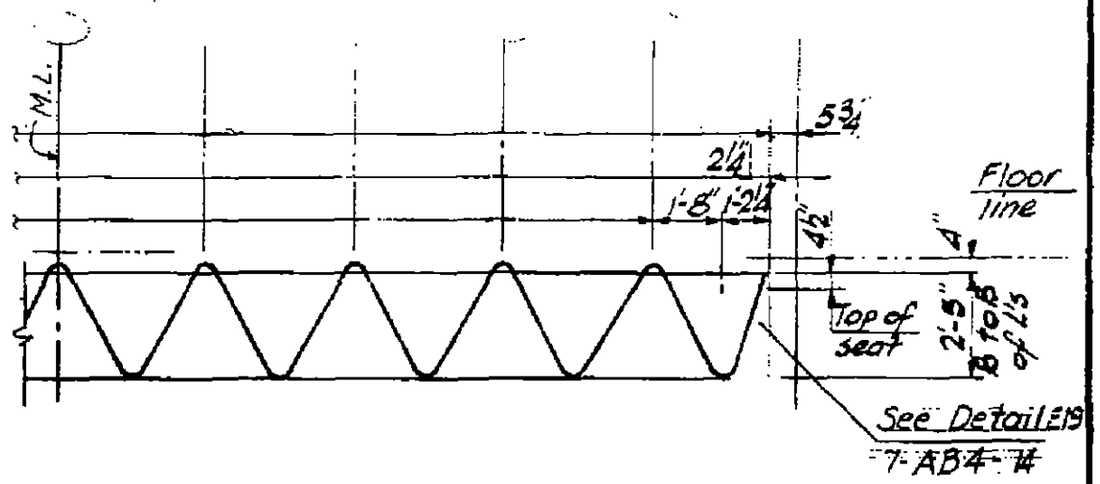

Elevation C 32 T 51

LICENSED PROFESSIONAL ENGINEER
LESLIE E. ROBERTSON
No. 34360
UNIVERSITY OF THE STATE OF NEW YORK

7-AB1-46

SKILLING - HELLE - CHRISTIANSEN - ROBERTSON Structural & Civil Engineers

PROJECT THE WORLD TRADE CENTER | TITLE - FLOOR TRUSS C 32 T52 | DATE 11-25-68

REVISIONS

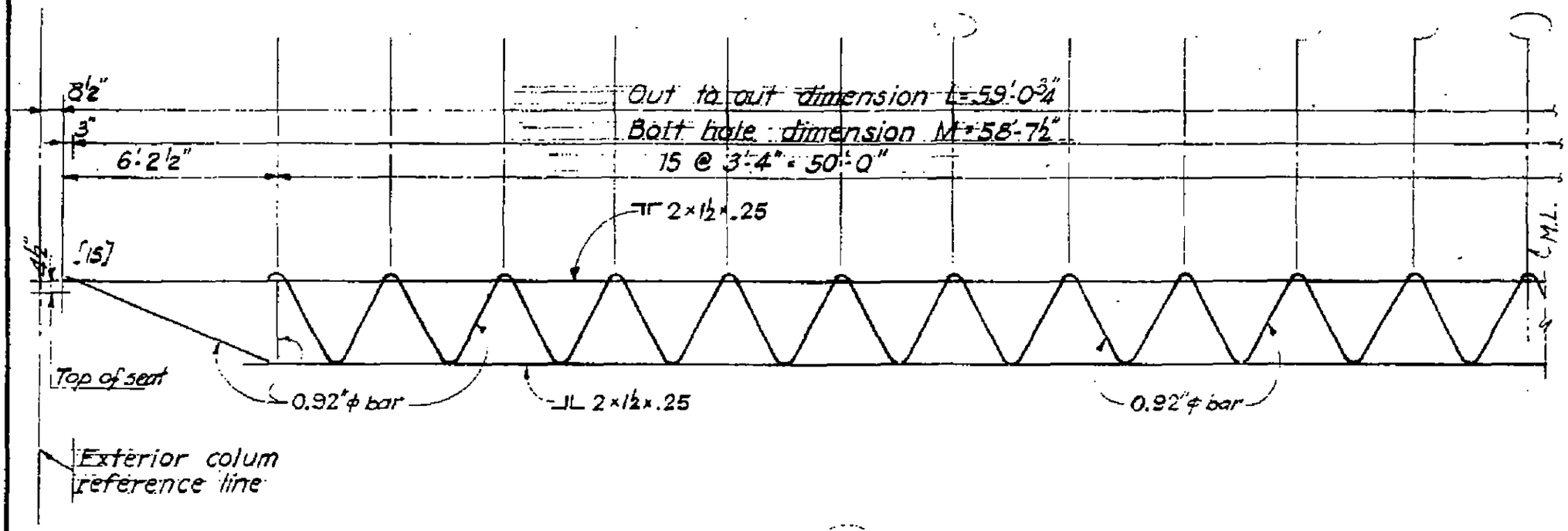

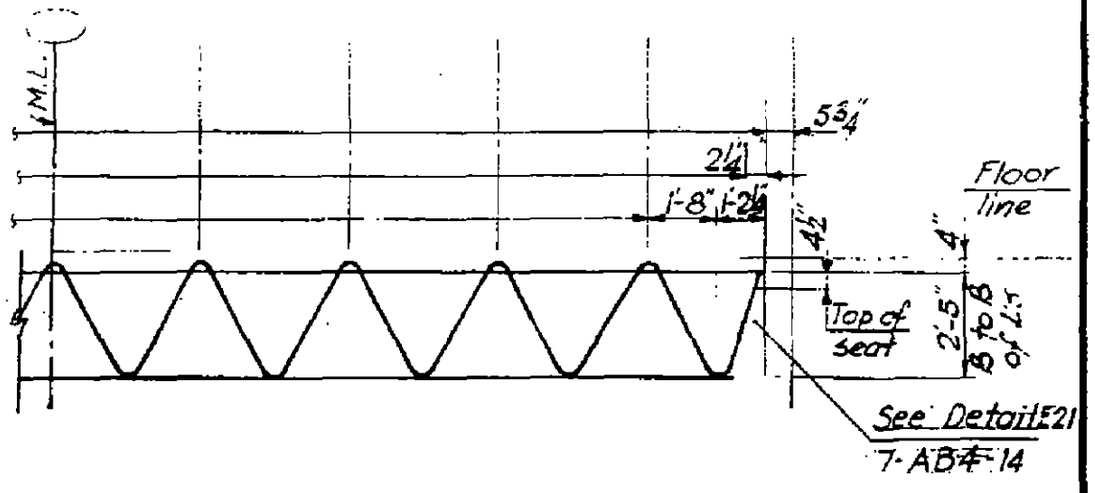

Elevation C32T52

LICENSED PROFESSIONAL ENGINEER
LESLIE E. ROBERTSON
No. 34360
UNIVERSITY OF THE STATE OF NEW YORK

7-AB1-47

SKILLING - HELLE - CHRISTIANSEN - ROBERTSON Structural & Civil Engineers

PROJECT THE WORLD TRADE CENTER | TITLE FLOOR TRUSS C32T53 & C32T35 | DATE 11-25-68

REVISIONS

1-6-69

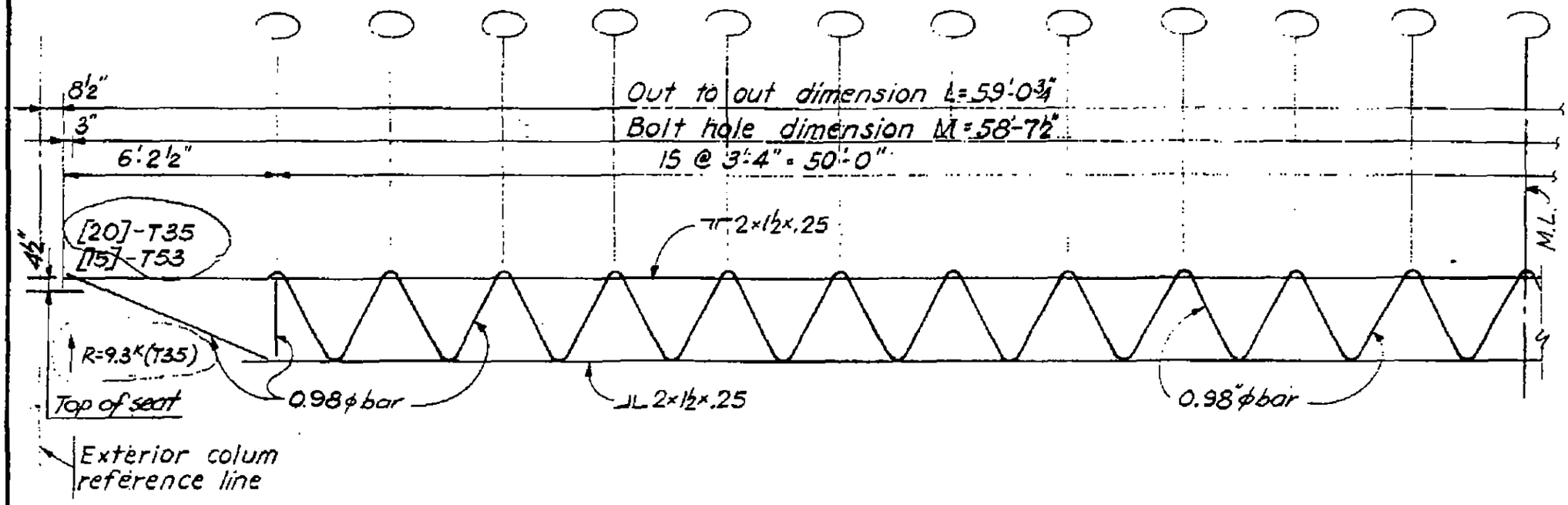

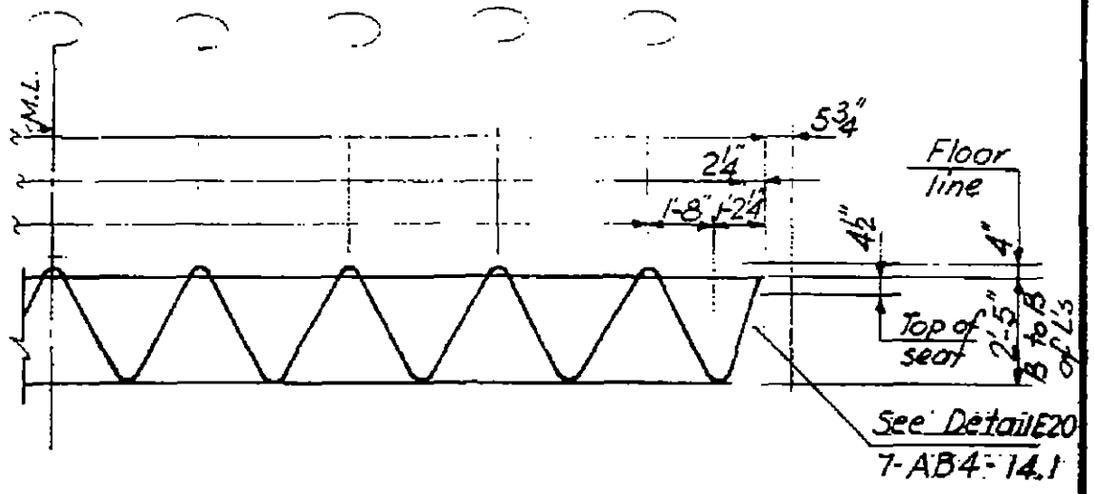

Elevation C32T53

C32T35 Similar except as noted

LICENSED PROFESSIONAL ENGINEER
LESLIE E. ROBERTSON
No. 34360
UNIVERSITY OF THE STATE OF NEW YORK

7-AB1-48

SKILLING - HELLE - CHRISTIANSEN - ROBERTSON Structural & Civil Engineers

PROJECT THE WORLD TRADE CENTER | TITLE TYPICAL WEB DETAILS | DATE 10-20-67

REVISIONS

1-3-68

2-15-68

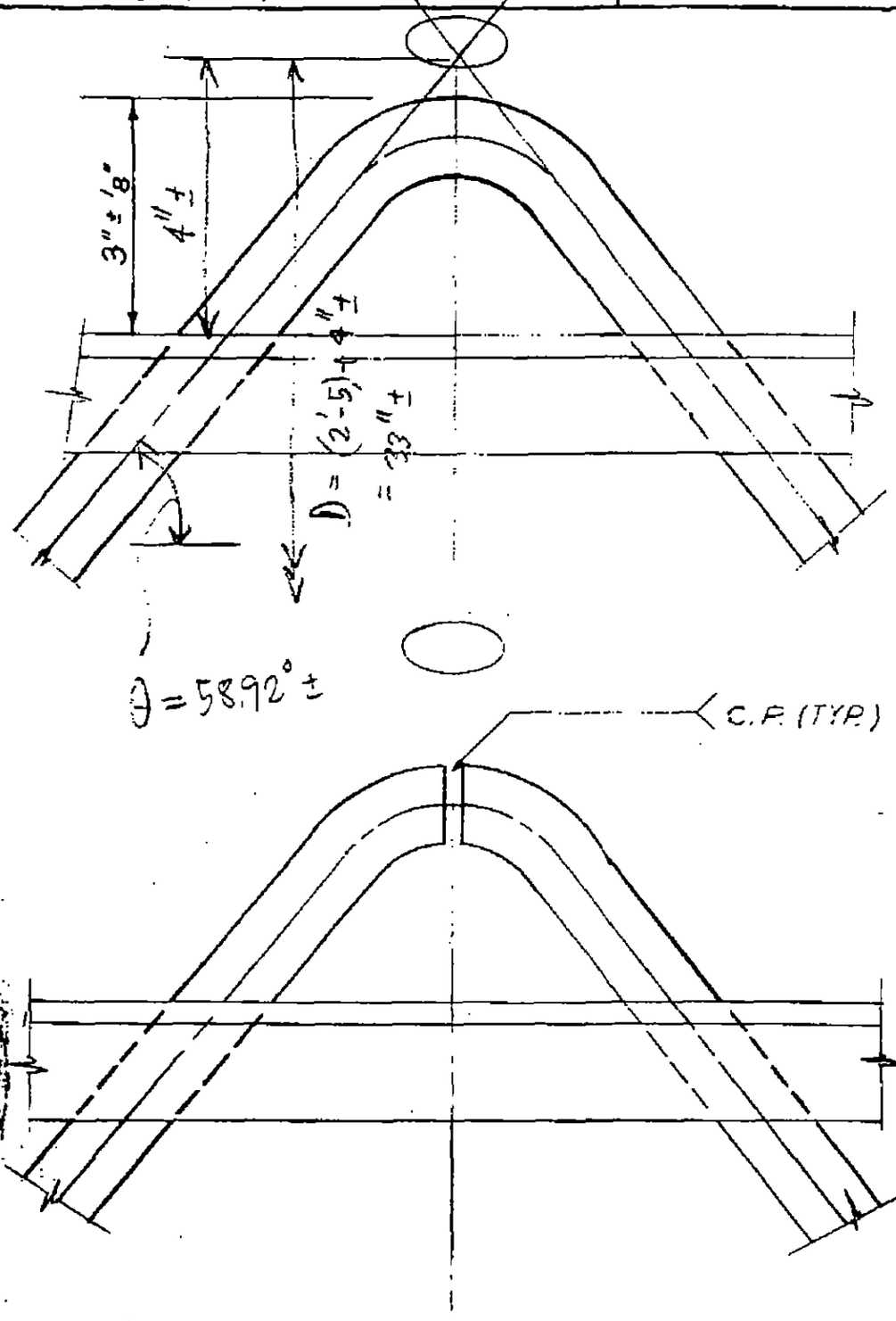

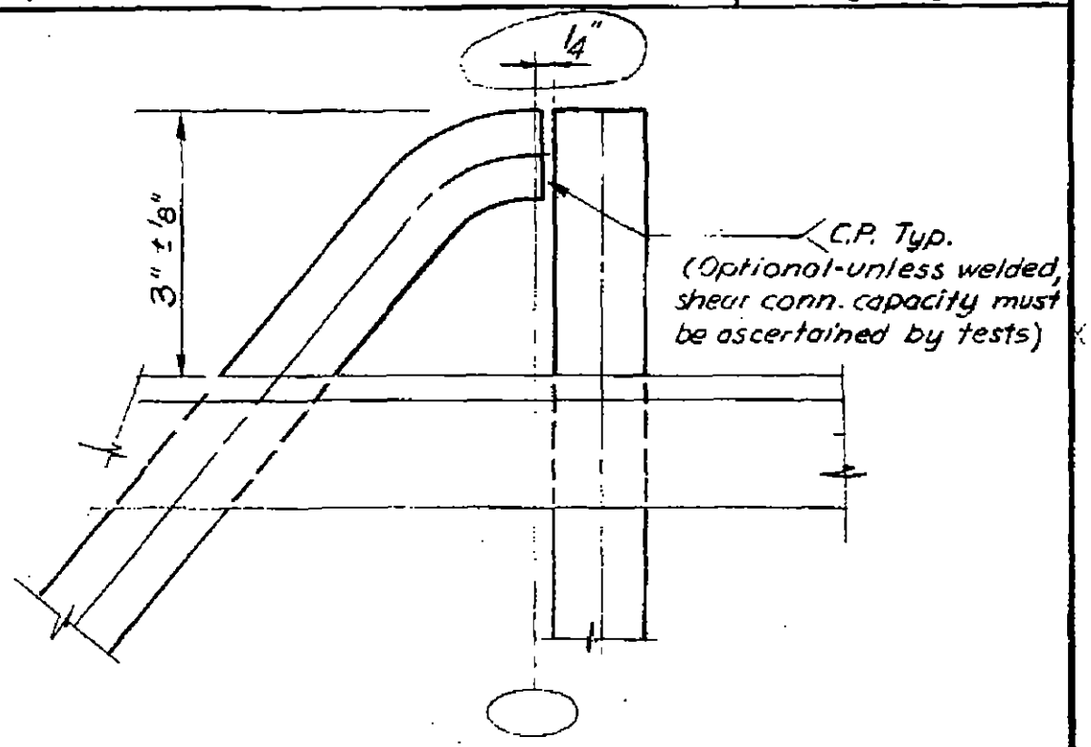

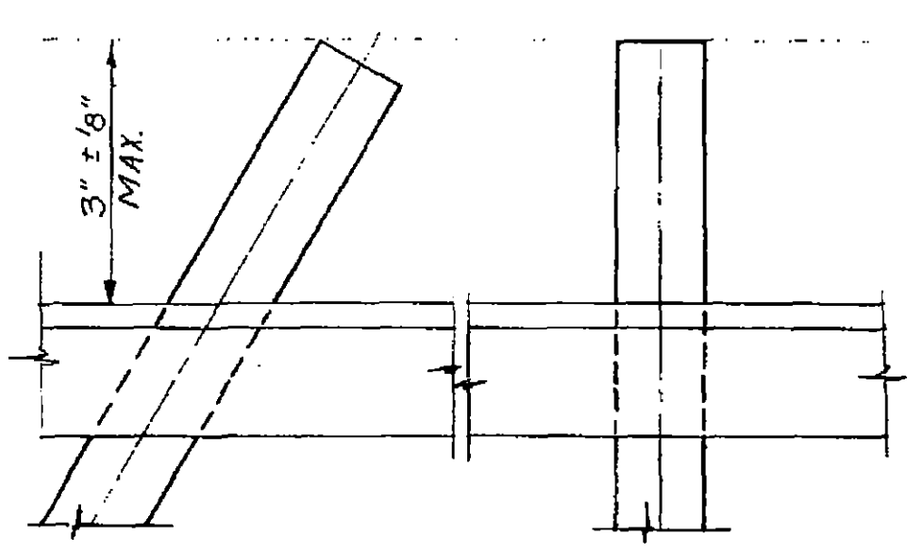

LICENSED PROFESSIONAL ENGINEER
LESLIE E. ROBERTSON
No. 34360
REGISTERED IN THE STATE OF NEW YORK

TOP CHORD - C32 TRUSSES

7-AB1-52

13

SKILLING - HELLE - CHRISTIANSEN - ROBERTSON Structural & Civil Engineers

PROJECT THE WORLD TRADE CENTER | TITLE TYPICAL WEB DETAILS | DATE 10-20-67

REVISIONS

1-3-68

4-1-68
7-22-68

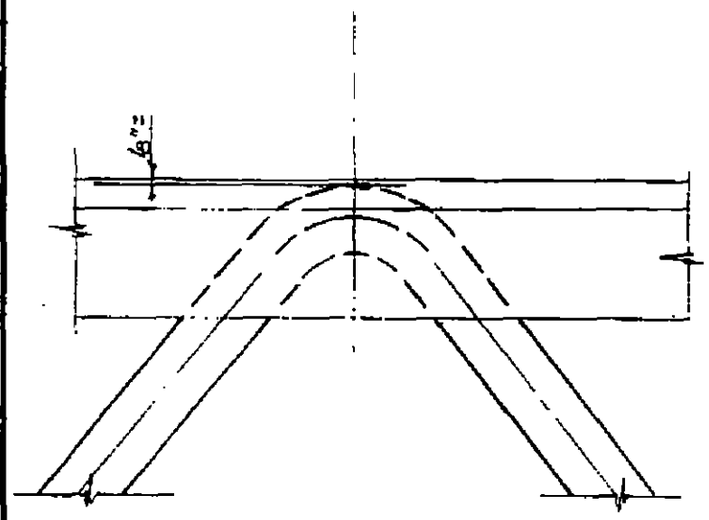

TOP CHORD - C24 & S24 TRUSSES

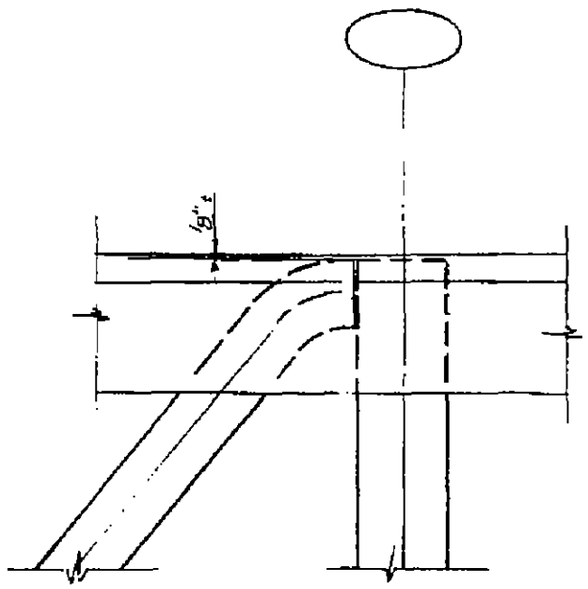

TOP CHORD
C24 & S24 TRUSSES

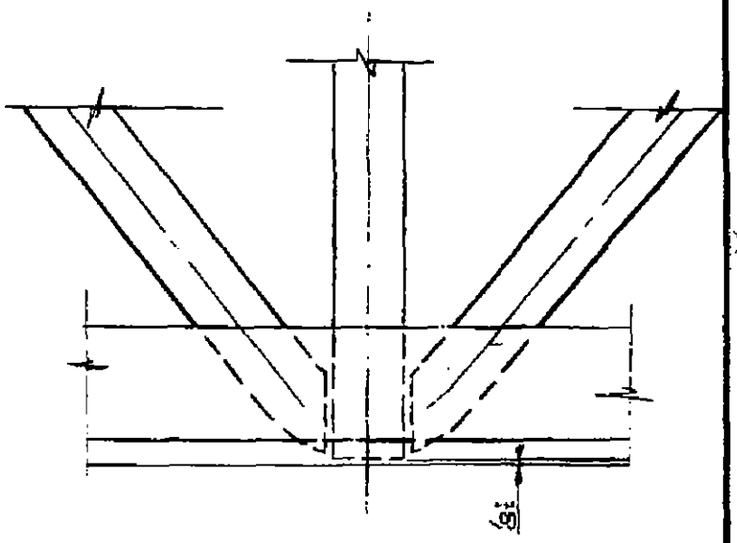

BOTTOM CHORD
C24 & S24 TRUSSES
(Where applicable)

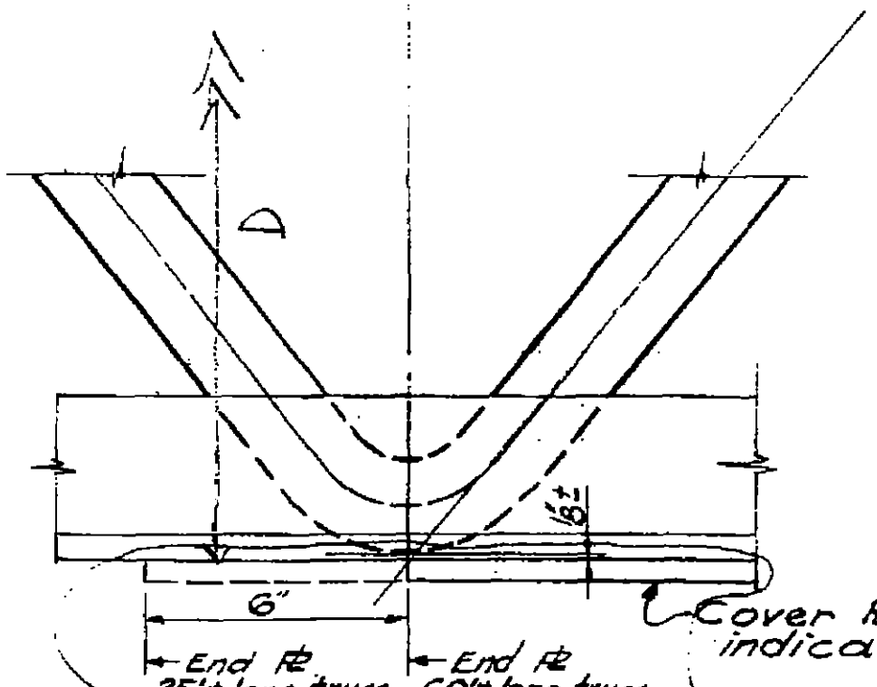

BOTTOM CHORD - C32 TRUSSES
C24 & S24 TRUSSES (Where applicable)

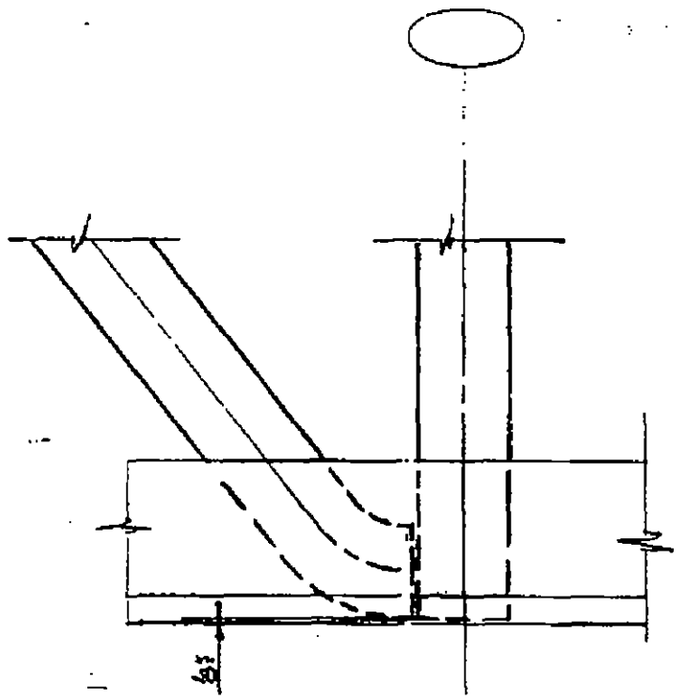

BOTTOM CHORD - C32 C24 & S24
TRUSSES

LICENSED PROFESSIONAL ENGINEER
LESLIE E. ROBERTS
No. 12060
REGISTERED IN THE STATE OF NEW YORK

7-AB1-53

1B

SKILLING - HELLE - CHRISTIANSEN - ROBERTSON Structural & Civil Engineers

PROJECT THE WORLD TRADE CENTER | TITLE FLOOR TRUSSES - CAMBERS | DATE 2-15-68

REVISIONS

4-15-68
8-1-68
8-15-68
10-4-68
11-25-68
1-6-69

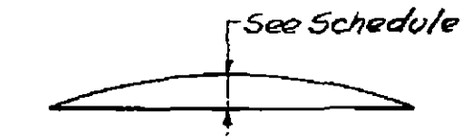

CAMBER DIAGRAM

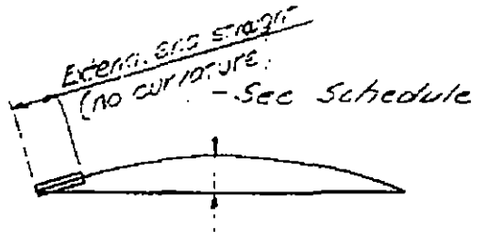

CAMBER DIAGRAM
C32T14 thru C32T26

Truss No	Camber at midspan (in)	Truss No	Camber at midspan (in)
C32T1	2	C32T27	1 15/16
C32T2	2 1/16	C32T28	1 15/16
C32T3	2 1/16	C32T29	1 7/8
C32T4	3/4	C32T30	1 7/8
C32T5	3/8	C32T31	2
C32T6	15/16	C32T32	2
C32T7	2 1/16	C32T33	1 3/4
C32T8	2	C32T34	1 15/16
C32T9	1 15/16	C32T35	3/4
C32T10	1 11/16	C32T36	2 1/4
C32T11	1 5/16	C32T37	2 1/4
C32T12	1/4	C32T38	2 1/8
C32T13	7/16	C32T39	2
C32T14	2	C32T40	2
C32T15	2 1/16		
C32T16	2 1/16		
C32T17	2		
C32T18	2 1/16		
C32T19	1 15/16		
C32T20	1 11/16		
C32T21	1 3/8		
C32T22	13/16		
C32T23	3/8		
C32T24	5/16		
C32T25	1/2		
C32T26	7/8		
C32T49	2		
C32T50	1 7/8		
C32T51	1 11/16		
C32T52	1 1/4		
C32T53	11/16		

7-AB1-54

SKILLING - HELLE - CHRISTIANSEN - ROBERTSON Structural & Civil Engineers

PROJECT THE WORLD TRADE CENTER | TITLE FLOOR TRUSS - SECTION A-A & B-B | DATE 4-1-68

REVISIONS

7-22-68
10-15-68

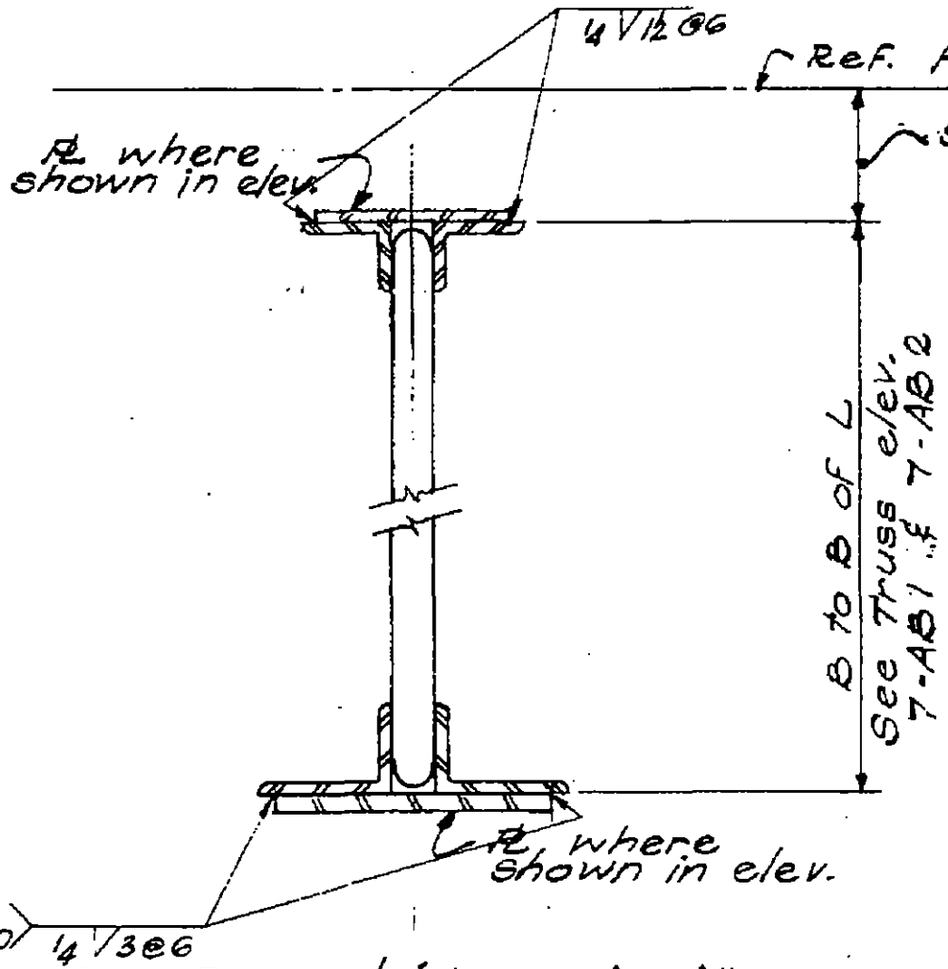

Section A-A

NOTE: Continuous welds to be provided at ends of plates of top and bottom chords and at intersections with 32T truss at top chords.

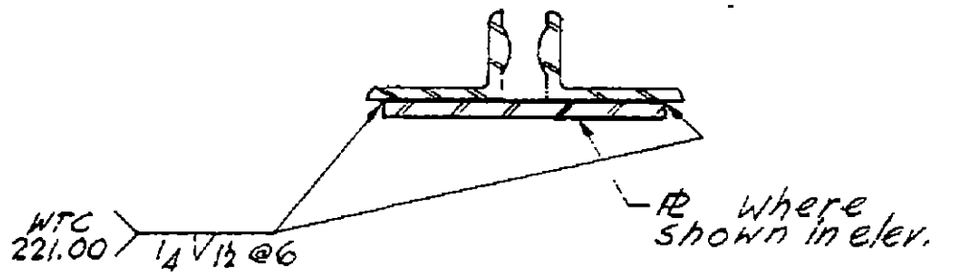

Section B-B

NOTE: Provide continuous welds at ends of plates

7-AB1-55

SKILLING - HELLE - CHRISTIANSEN - ROBERTSON — Structural & Civil Engineers

PROJECT THE WORLD TRADE CENTER | TITLE FLOOR TRUSSES - INDEX & GENERAL NOTES | DATE 10/20/67

REVISIONS

1-3-68
1-26-68
2-15-68
4-1-68
8-1-68
8-15-68
10-4-68
1-3-69
1-6-69
2-3-69
3-3-69
4-1-69
Printed 5-1-69

7-AB2- 1	Floor Trussee - Index & General Notes
7-AB2- 2	Floor Truss 24T7, 24T7A, 24T7B
7-AB2- 3	Floor Truss 24T8, 24T8A, 24T8B
7-AB2- 4	Floor Truss 24T9, 24T9A
7-AB2- 5	Floor Truss 24T10, 24T10A, 24T10B
7-AB2- 6	Bridging 24T11, 24T11A,
7-AB2- 7	Bridging 24T12,
7-AB2- 8	Bridging 24T13, 13A, 13B, 13C,
7-AB2- 8.1	Void
7-AB2- 9	Floor Truss 24T14, 14B
7-AB2- 10	Floor Truss 24T15,
7-AB2- 11	Floor Truss 24T16,
7-AB2- 12	Floor Truss 24T7C, 24T7D, 24T7E
7-AB2- 13	Floor Truss 24T10C, 24T10D, 24T10E
7-AB2- 14	Floor Truss 24T14A, 24T15A, 24T16A
7-AB2- 15	Floor Truss 24T11B, 24T11C, 24T13D
7-AB2- 16	Floor Truss 24T7F, 24T7G, 24T7H
7-AB2- 17	Floor Truss 24T16B, 24T16C
7-AB2- 18	Floor Truss 24T10F, 24T10G, 24T10H
7-AB2- 19	Floor Truss 24T8C, 24T8D, 24T8E
7-AB2- 20	Floor Truss 24T10J, 24T10K, 24T10L

GENERAL NOTES

1. All material, including detail material not shown on these dwgs., to be Fy = 50 unless otherwise noted.

2. All floor truss angles have short legs vertical.

3. Horizontal shear forces between truss panel points and the composite concrete slab are indicated [ ] in the truss elevations. Where no shear force is given, the connection shall be proportioned for a force of 5 Kips ([5]). See Dwg. 7-AB1-1 for additional notes for additional shear forces.

4. See Dwg. 7-AB1-1 for notes regarding the joint occurrence of longitudinal and transverse horizontal shear force.

5. Chord stresses are indicated in truss elevations as "P = ". Where no force is given each truss chord splice connection shall be proportioned for a minimum force of 23 Kips (P = 23).

6. Vertical shear forces between adjacent panels are indicated in truss elevations are "V = ". Where no force is given, shear transfer connection shall be proportioned for a minimum force of 5 Kips (V = 5). Connections shall be proportioned for a shear force of both positive sign and negative sign.

7. Contractor shall supply representative calculations and/or test results for each connection proportioned by the Contractor. All connections, details and the like are subject to approval by the Engineer.

8. End reactions of each truss are indicated in truss elevations as "R = ". Where no force is given, end connections shall be proportioned for a minimum reaction of 9 Kips (R = 9).

9. Truss shear, indicating minimum requirements for each truss web member, is tabulated across the bottom of the truss elevations. Where no shear is given, web members and their connections shall be proportioned for a minimum shear of 2.2 Kips.

7-AB2-1

SKILLING - HELLE - CHRISTIANSEN - ROBERTSON Structural & Civil Engineers

PROJECT THE WORLD TRADE CENTER | TITLE FLOOR TRUSS (24 T7, 7A & 7B) | DATE 10-20-67

REVISIONS
1-2-68
1-26-68
4-1-68
7-22-68

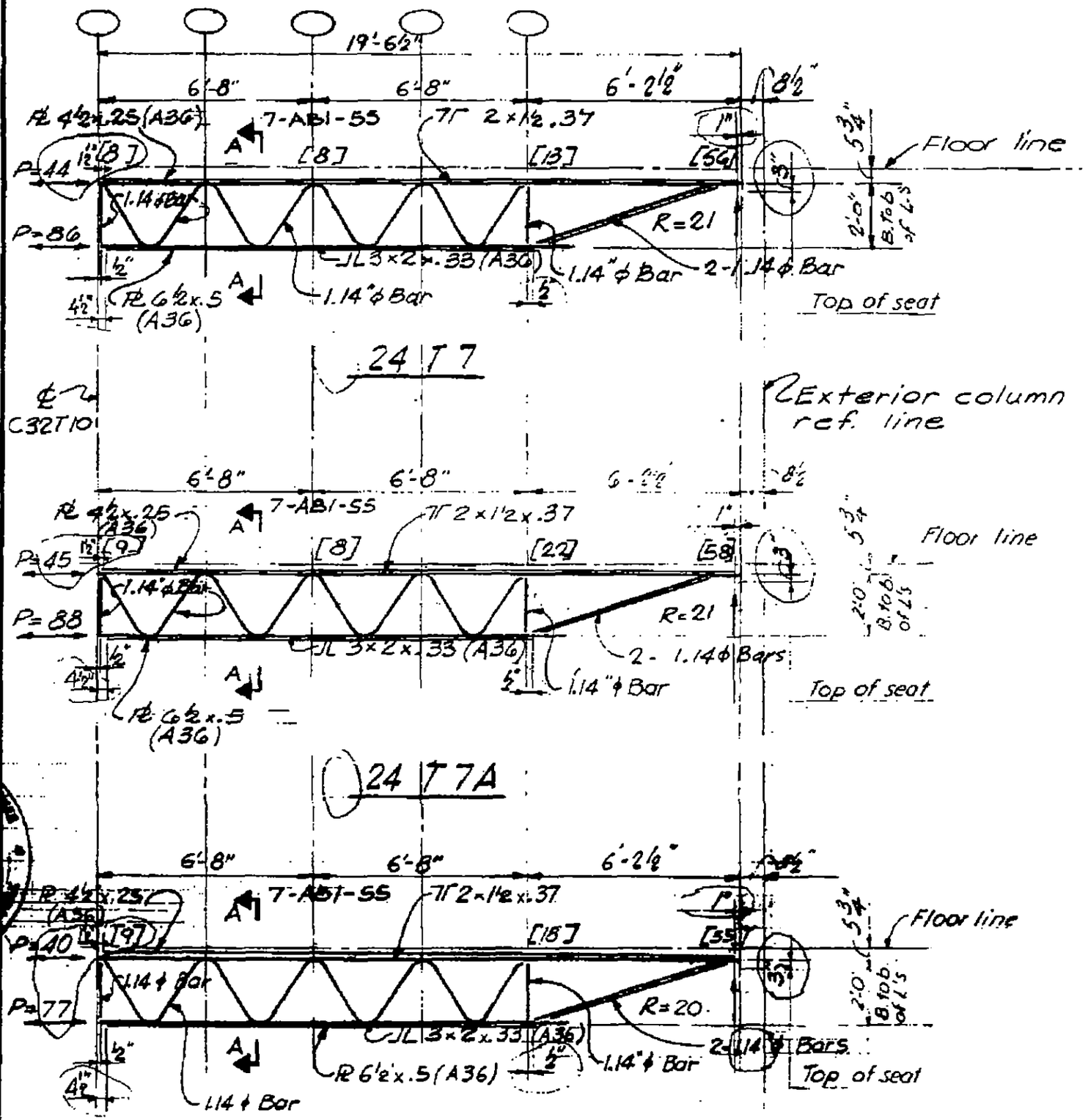

7-AB2-2

15

SKILLING - HELLE - CHRISTIANSEN - ROBERTSON Structural & Civil Engineers

PROJECT THE WORLD TRADE CENTER | TITLE FLOOR TRUSS 24T 8, 8A & 8B | DATE 10-20-67

REVISIONS

1-3-68
1-26-68
4-1-68
4-15-68
7-22-68

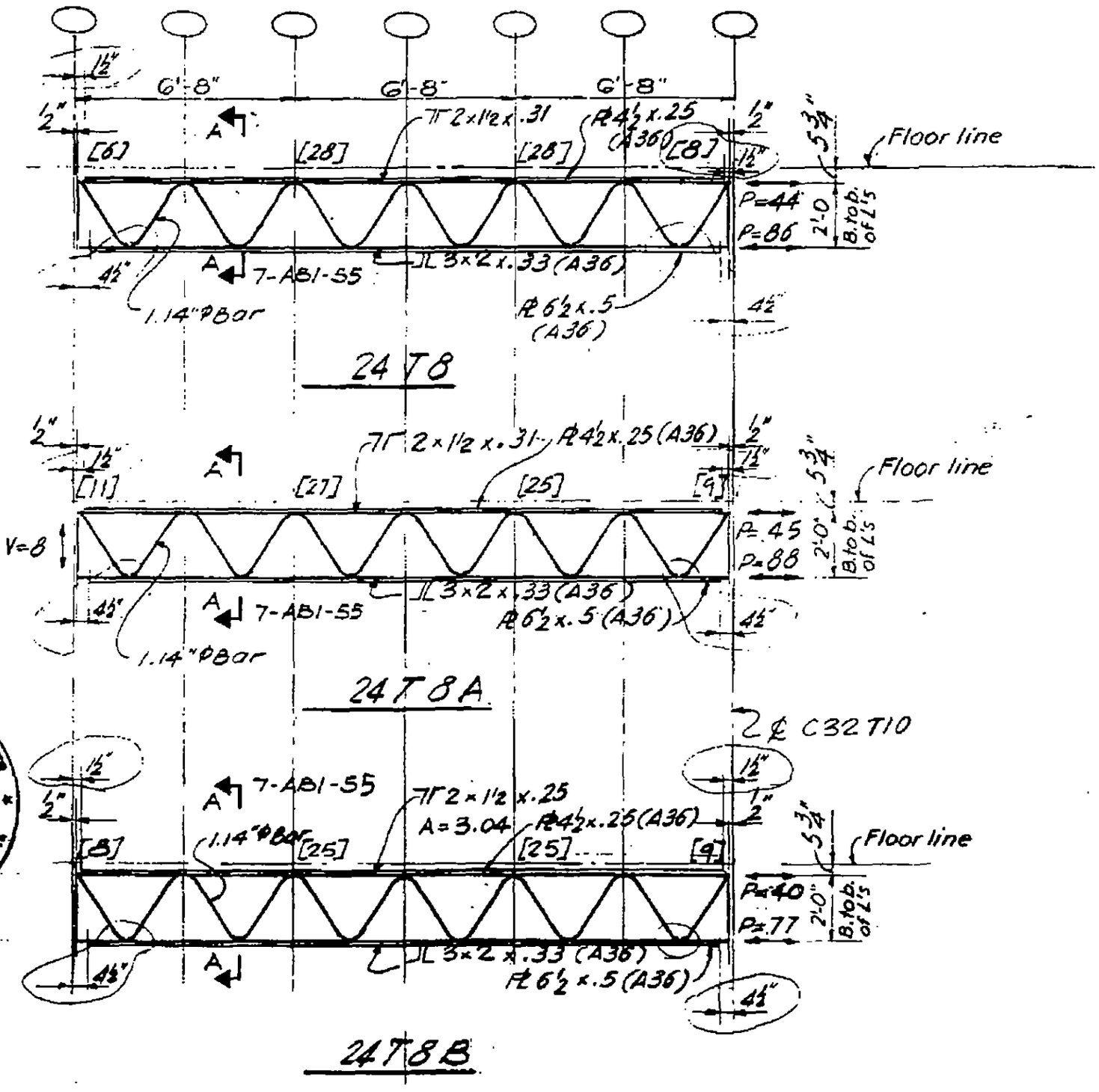

7-AB2-

16

SKILLING - HELLE - CHRISTIANSEN - ROBERTSON Structural & Civil Engineers

PROJECT THE WORLD TRADE CENTER | TITLE FLOOR TRUSS 24 T9 & 9A | DATE 10-20-67

REVISIONS

1-3-68
1-26-68
4-1-68
7-22-68

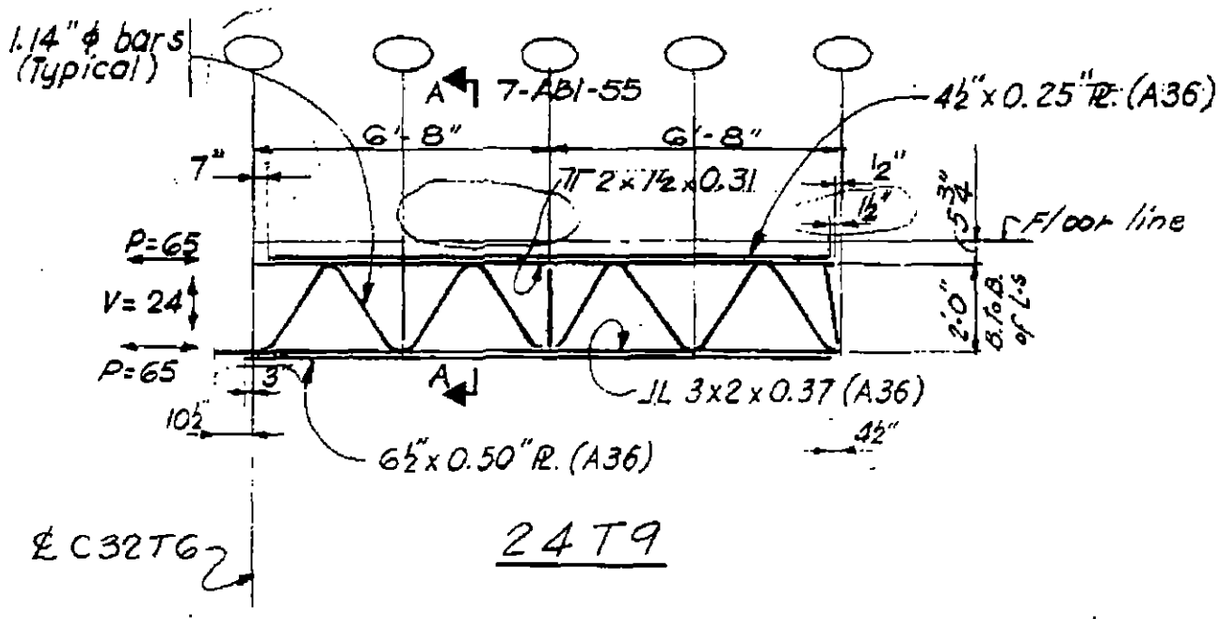

24 T9

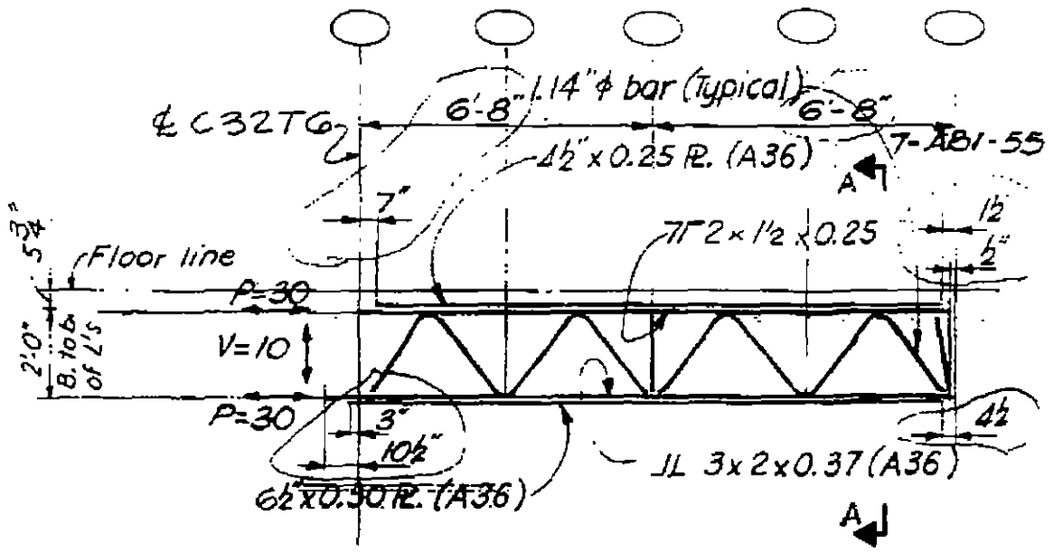

24 T9A

12

7-AB2-4

SKILLING - HELLE - CHRISTIANSEN ~ ROBERTSON — Structural & Civil Engineers

PROJECT THE WORLD TRADE CENTER | TITLE FLOOR TRUSS 24T 10, 10A, 10B | DATE 10-20-67

REVISIONS
1-3-68
1-26-68
4-15-68
7-22-68

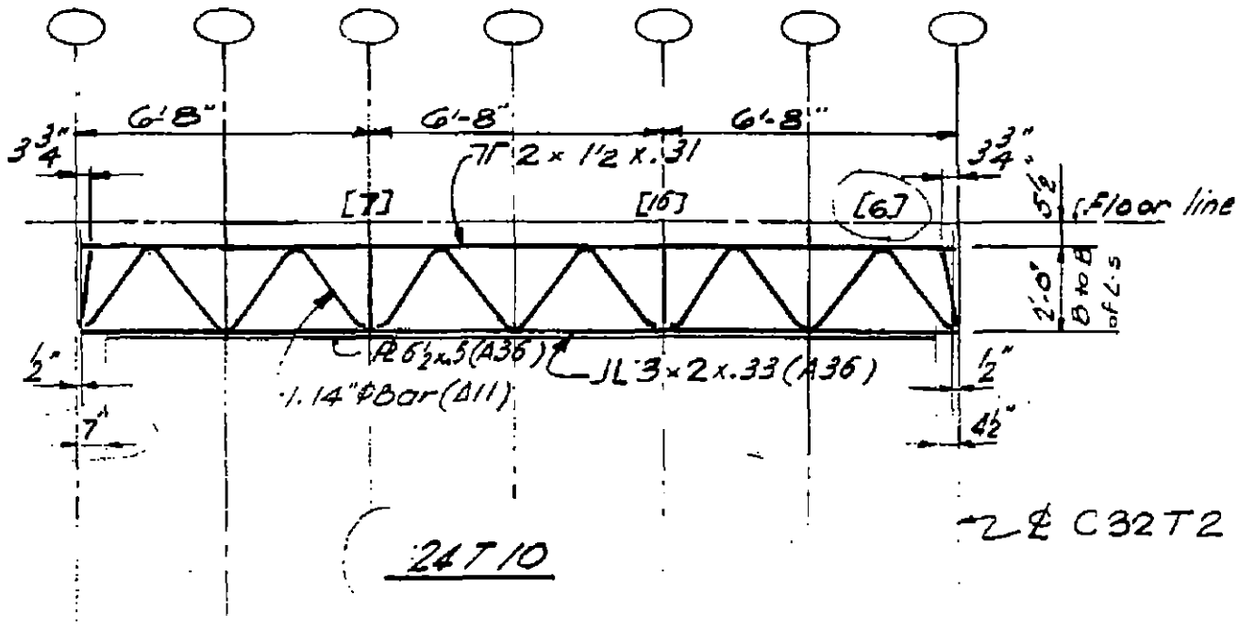

24T10

2 & C32T2

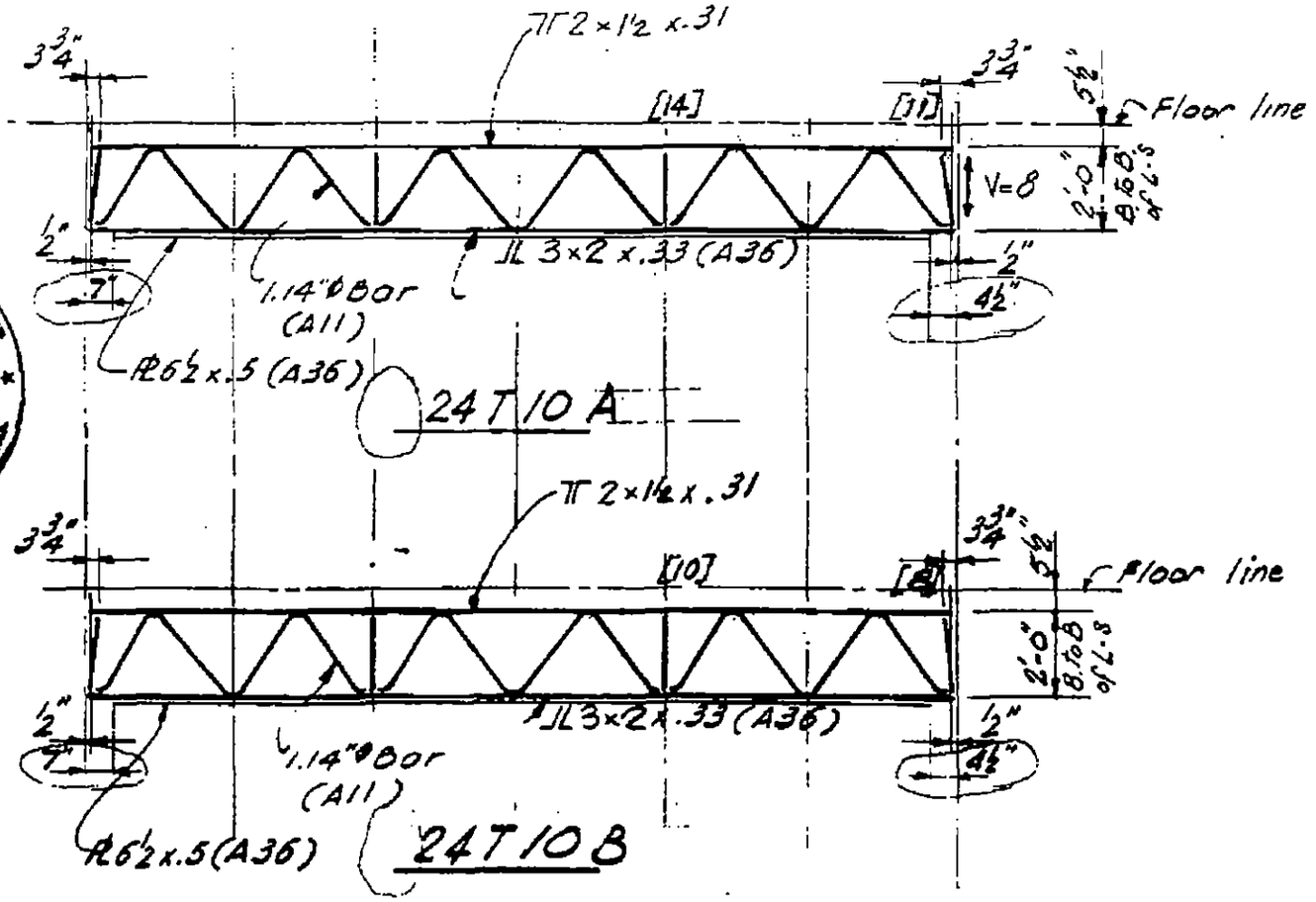

LICENSED PROFESSIONAL ENGINEER LESLIE E. ROBERTSON No. 24360 UNIVERSAL

7-AB2-5

SKILLING - HELLE - CHRISTIANSEN - ROBERTSON Structural & Civil Engineers

PROJECT THE WORLD TRADE CENTER | TITLE FLOOR BRIDGING 24 T 11, 11A | DATE 10-20-67

REVISIONS
1-3-68
1-26-68
2-15-68
7-22-68

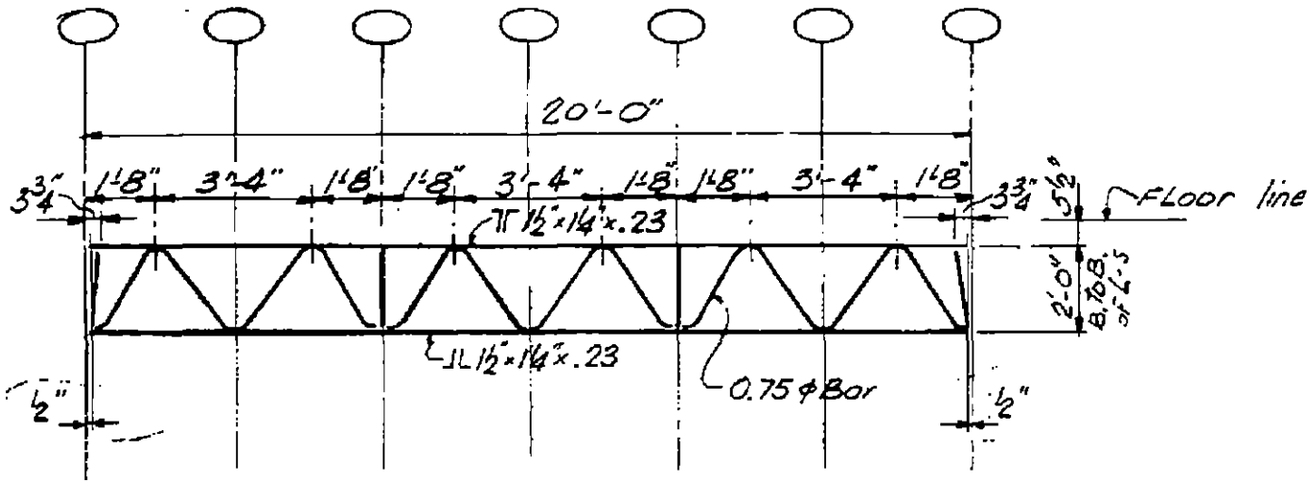

24 T 11

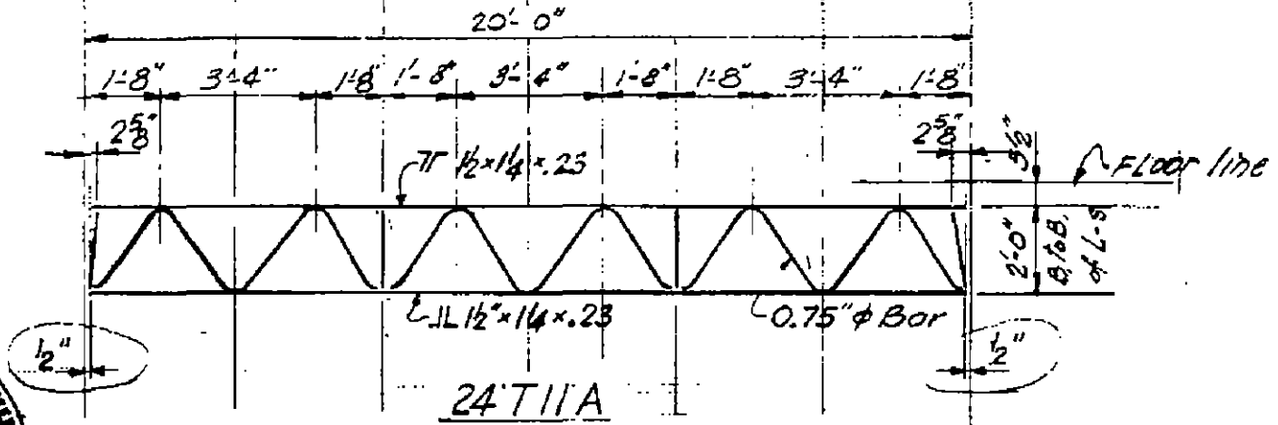

24 T 11 A

LICENSED PROFESSIONAL ENGINEER
ROBERT E. ROBERTSON
34360
STATE OF NEW YORK

7-AB2-6

CHRISTIANSEN - ROBERTSON — Structural & Civil Engineers

PROJECT: [illegible] EAST CENTER | TITLE: FLOOR FRAMING 24 T 12 | DATE: 10-20-67

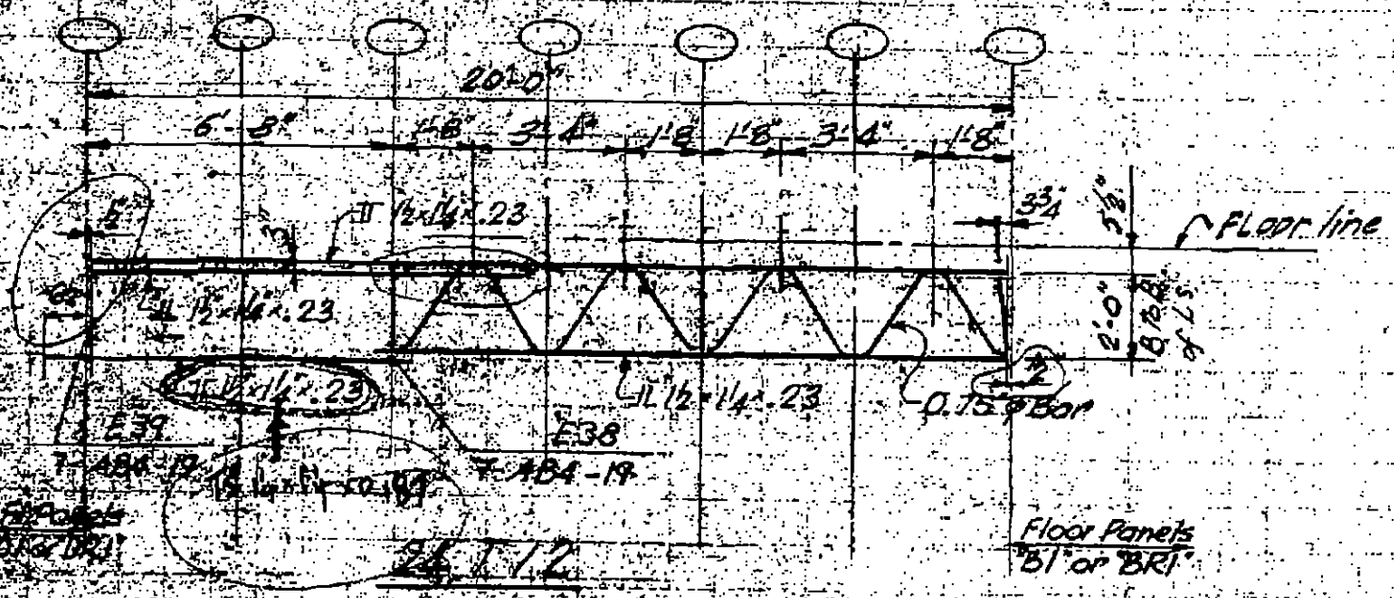

SKILLING - HELLE - CHRISTIANSEN - ROBERTSON Structural & Civil Engineers

PROJECT: THE WORLD TRADE CENTER | TITLE: FLOOR BRIDGING 24T12 | DATE: 10-20-67

REVISIONS
1-3-68
1-26-68
2-15-68
7-22-68

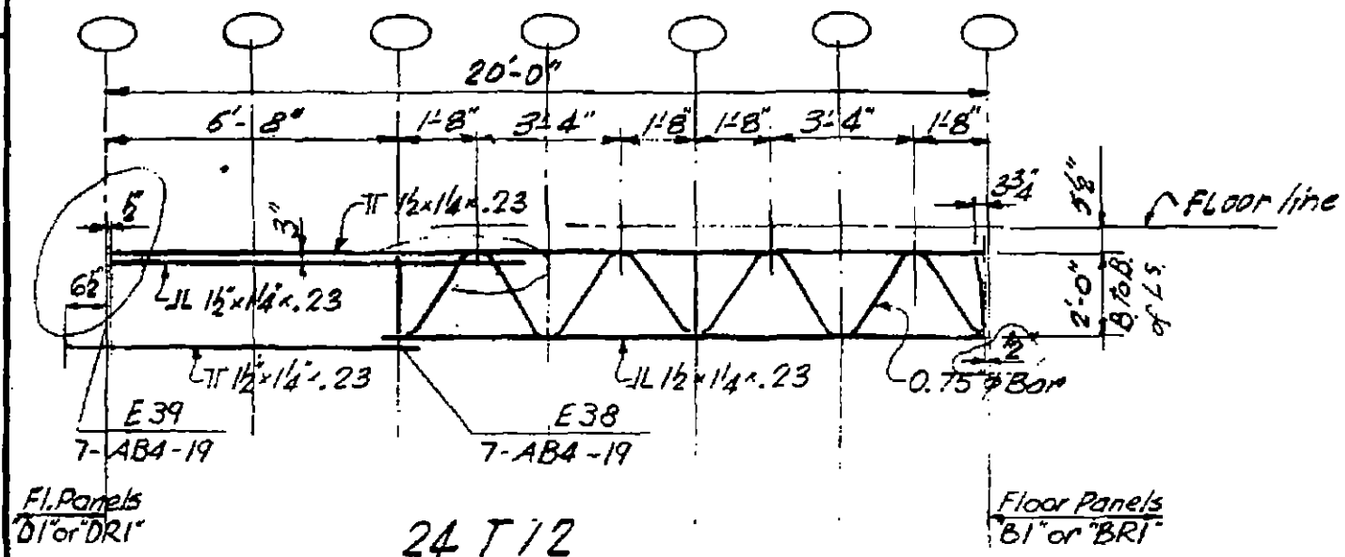

24T12

20

7-AB2-7

SKILLING - HELLE - CHRISTIANSEN - ROBERTSON Structural & Civil Engineers

PROJECT THE WORLD TRADE CENTER | TITLE FLOOR BRIDGING 24T13, 13A, 13B, 13C | DATE 10-20-67

REVISIONS
1-16-68
2-15-68
7-22-68

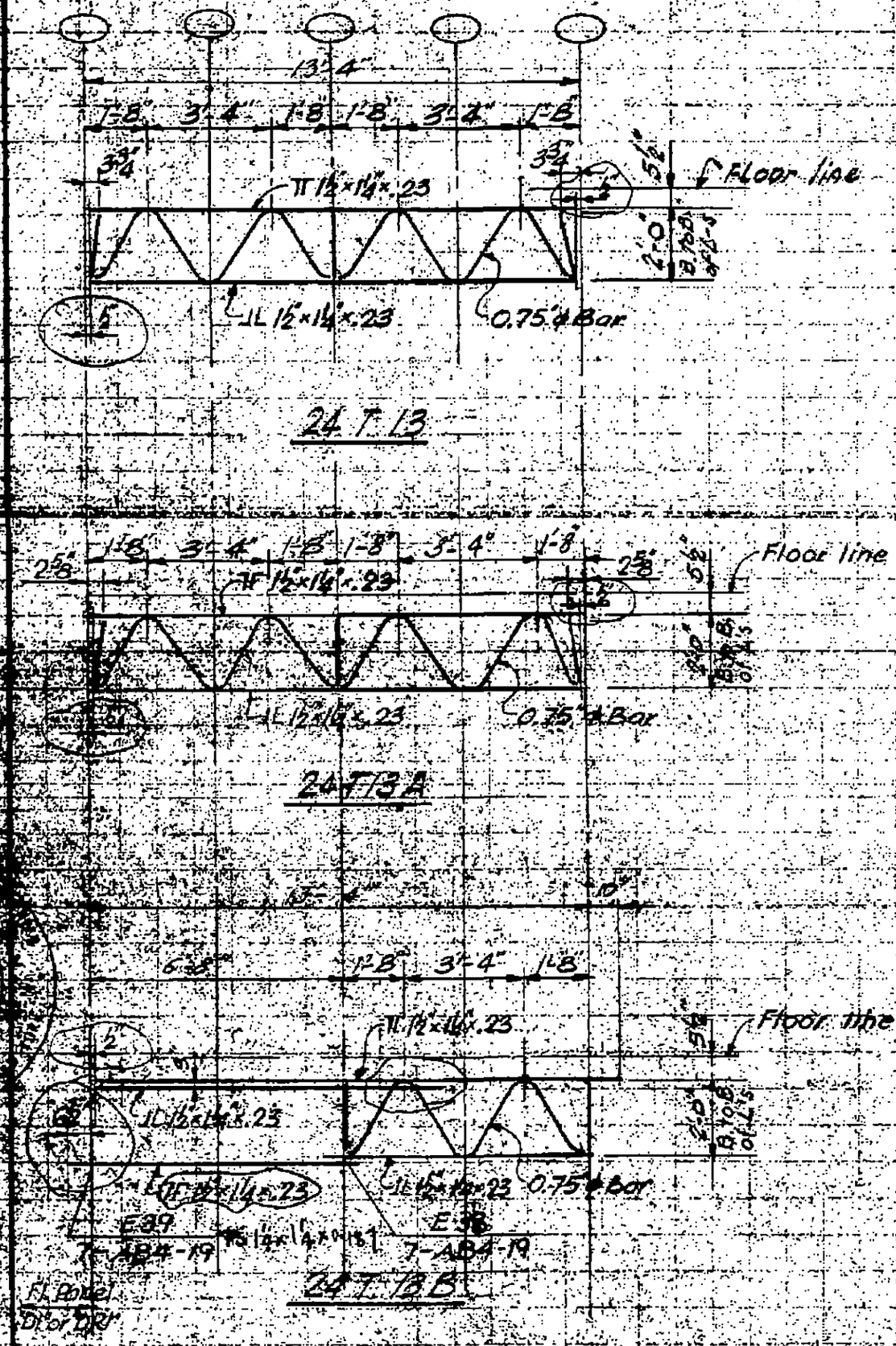

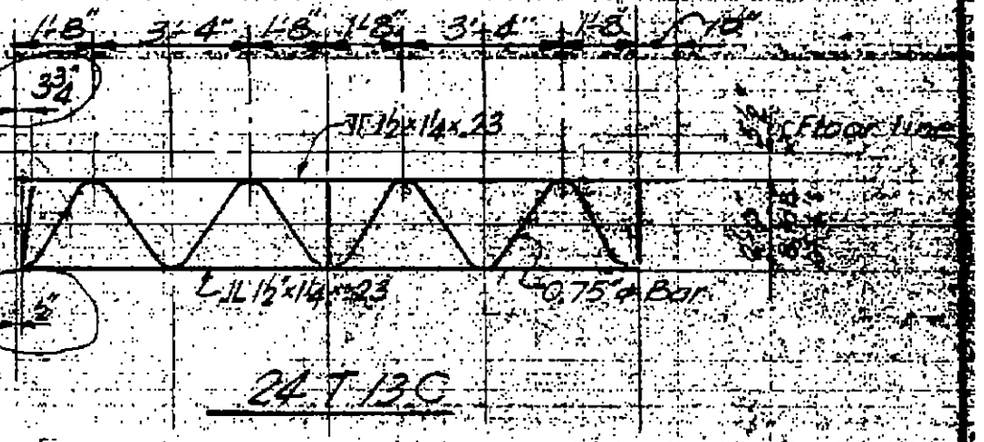

7-AB2-8

SKILLING - HELLE - CHRISTIANSEN - ROBERTSON Structural & Civil Engineers

PROJECT THE WORLD TRADE CENTER | TITLE FLOOR BRIDGING 24T13, 13A, 13B, 13C | DATE 10-20-67

REVISIONS
1-3-68
1-26-68
2-15-68
7-22-68

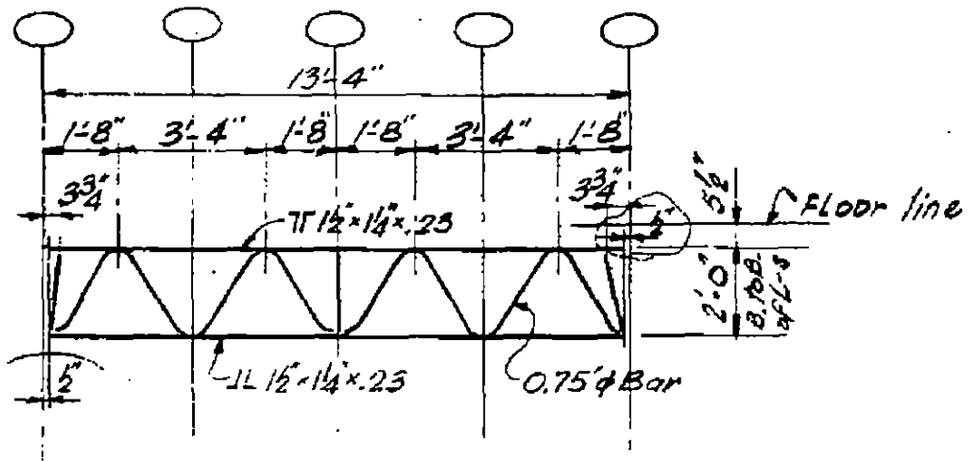

24 T 13

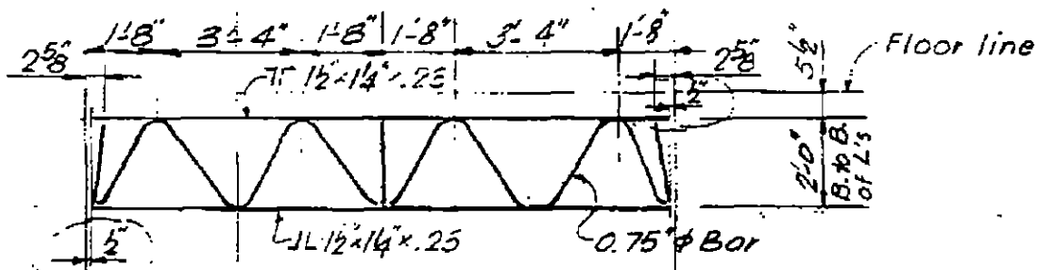

24 T 13A

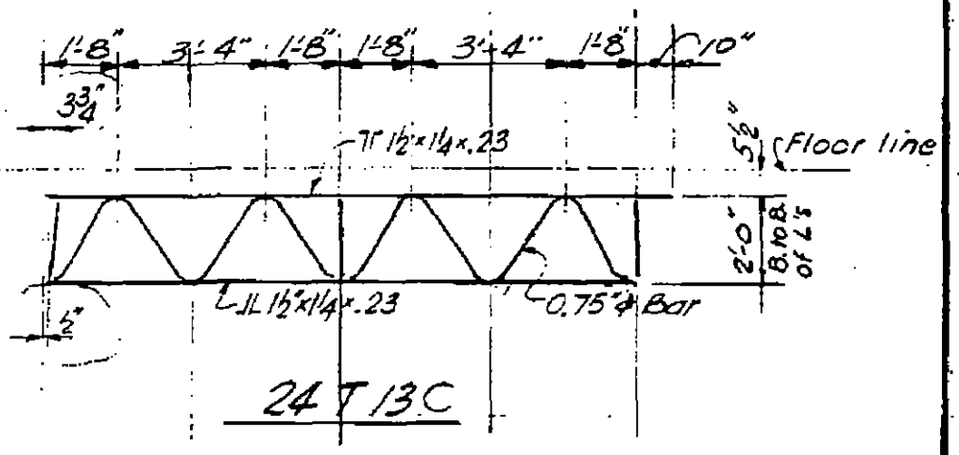

24 T 13C

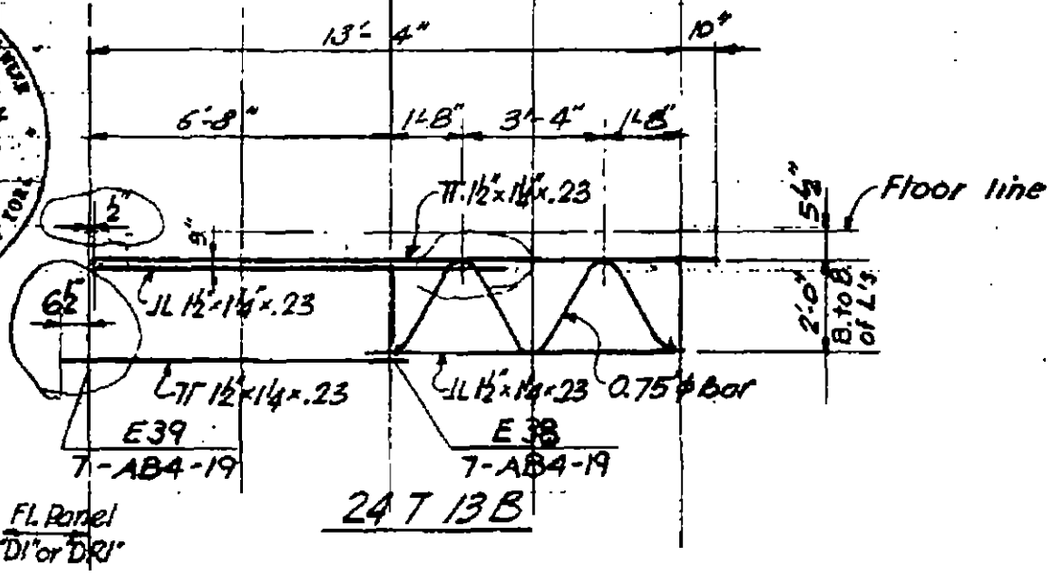

24 T 13B

REGISTERED PROFESSIONAL ENGINEER
No. 24260
STATE OF NEW YORK

7-AB2-8

SKILLING - HELLE - CHRISTIANSEN - ROBERTSON Structural & Civil Engineers

PROJECT THE WORLD TRADE CENTER | TITLE FLOOR TRUSS 24T14, 24T14B | DATE 1-3-68

REVISIONS

1-26-68
4-1-68
7-22-68
1-6-69

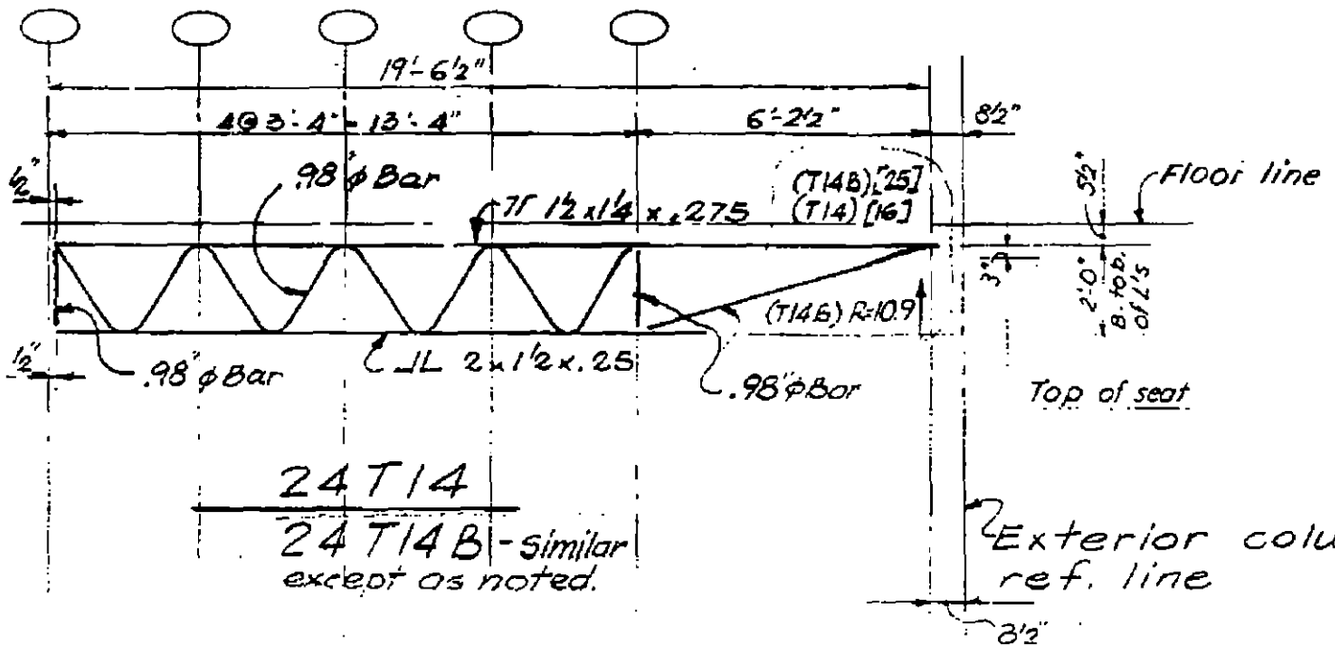

LICENSED PROFESSIONAL ENGINEER
LESLIE E. ROBERTSON
No. 34360
STATE OF NEW YORK

7-AB2-9

SKILLING - HELLE - CHRISTIANSEN - ROBERTSON Structural & Civil Engineers

PROJECT THE WORLD TRADE CENTER | TITLE FLOOR TRUSS 24T15 | DATE 1-26-68

REVISIONS

4-1-68
4-15-68
7-22-68

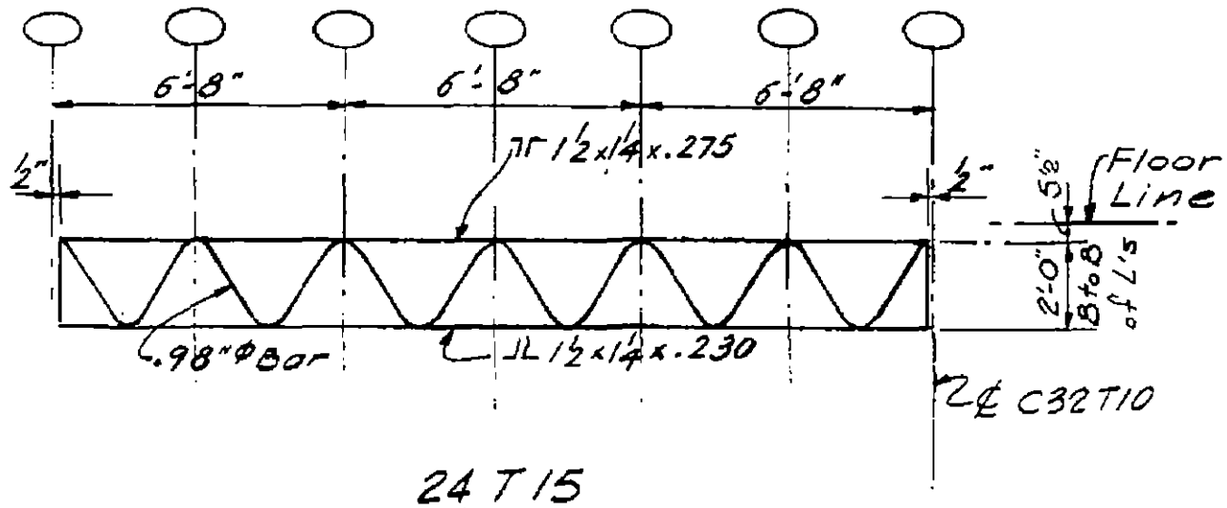

24 T 15

LICENSED PROFESSIONAL ENGINEER
LESLIE E. ROBERTSON
No. 34360
LICENSED TO PRACTICE IN THE STATE OF NEW YORK

7-AB2-10

SKILLING - HELLE - CHRISTIANSEN - ROBERTSON Structural & Civil Engineers

PROJECT THE WORLD TRADE CENTER | TITLE FLOOR TRUSS 24T16 | DATE 1-26-68

REVISIONS

4-1-68
4-15-68
7-22-68

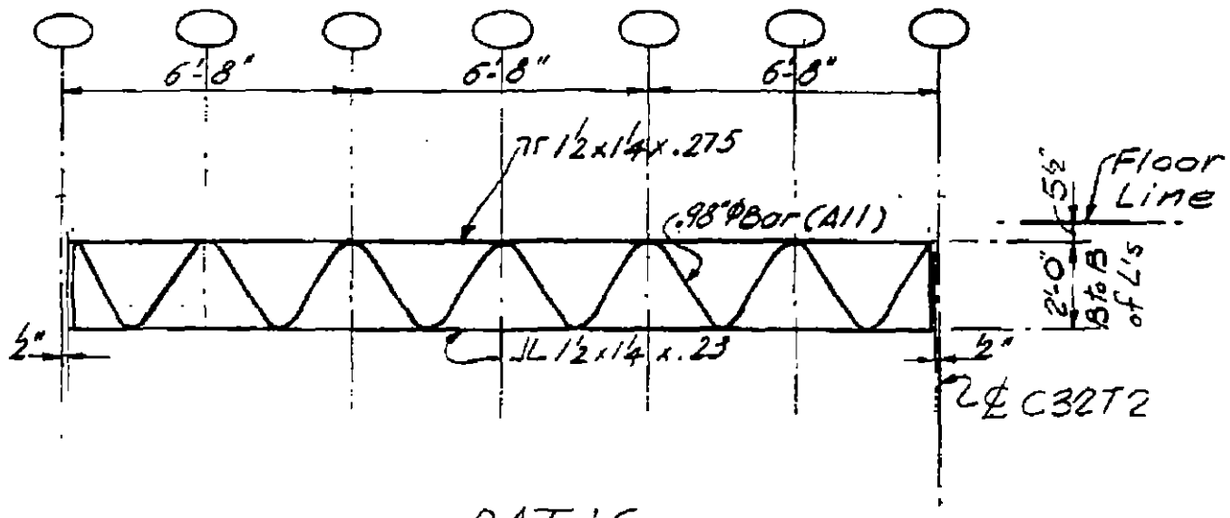

24T16

LICENSED PROFESSIONAL ENGINEER
LESLIE E. ROBERTSON
No. 34360
UNIVERSITY OF THE STATE OF NEW YORK

24

7-AB2-11

SKILLING - HELLE - CHRISTIANSEN - ROBERTSON Structural & Civil Engineers

PROJECT THE WORLD TRADE CENTER | TITLE FLOOR TRUSS 24T7C, 24T7D, 24T7E | DATE 8-15-68

REVISIONS

10-4-68

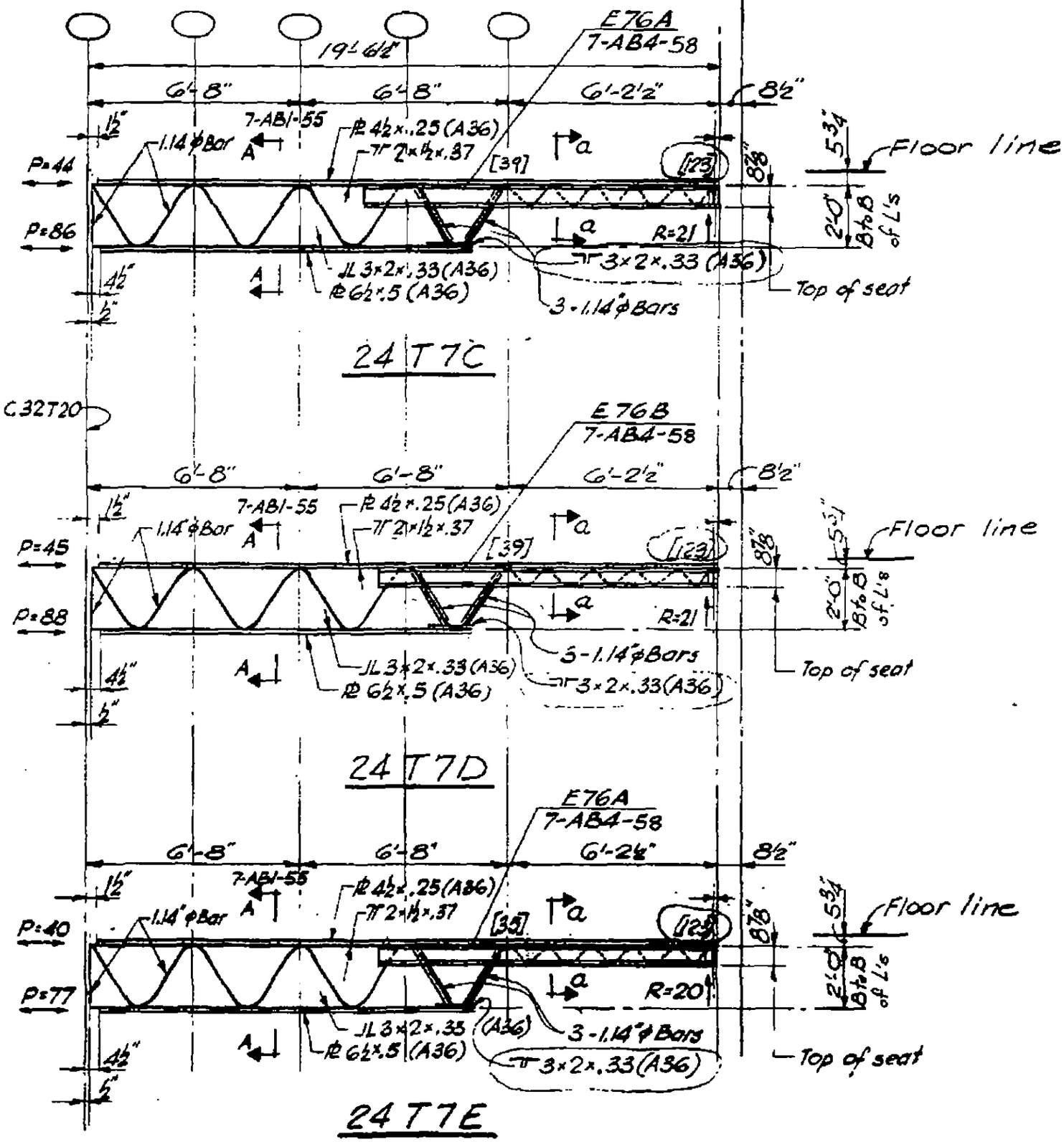

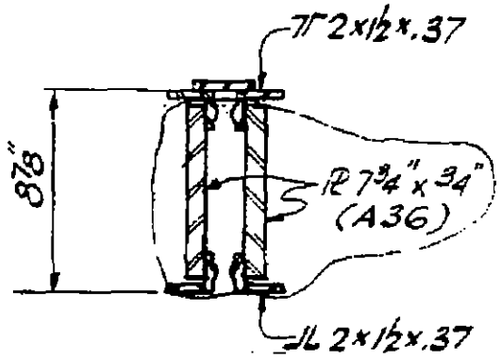

Section a-a

7-AB2-12

SKILLING, HELLE, CHRISTIANSEN, ROBERTSON — Structural & Civil Engineers

PROJECT: THE WORLD TRADE CENTER | TITLE: FLOOR TRUSS 24T10C, 24T10D & 24T10E | DATE: 8-15-68

REVISIONS

10-4-68

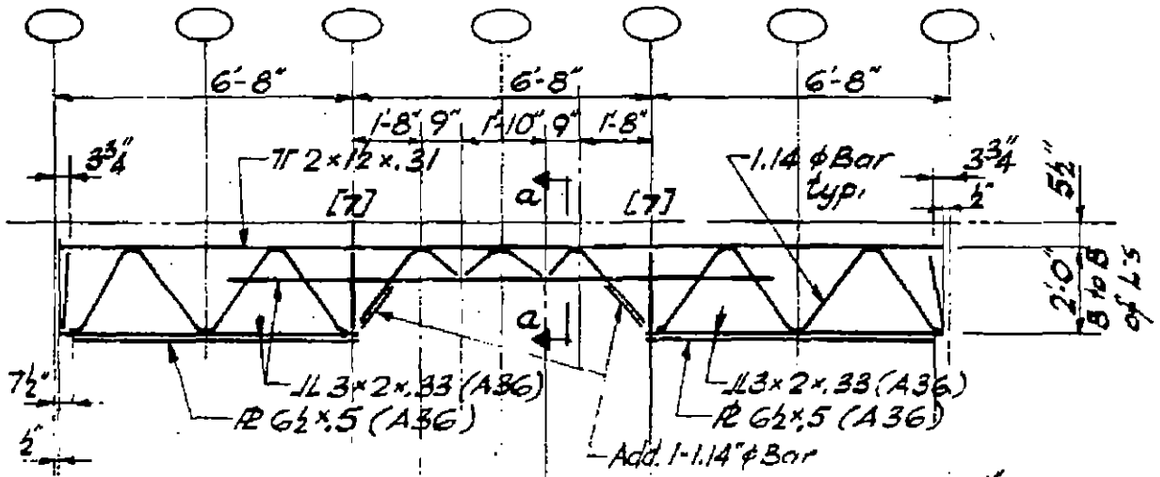

24T10C

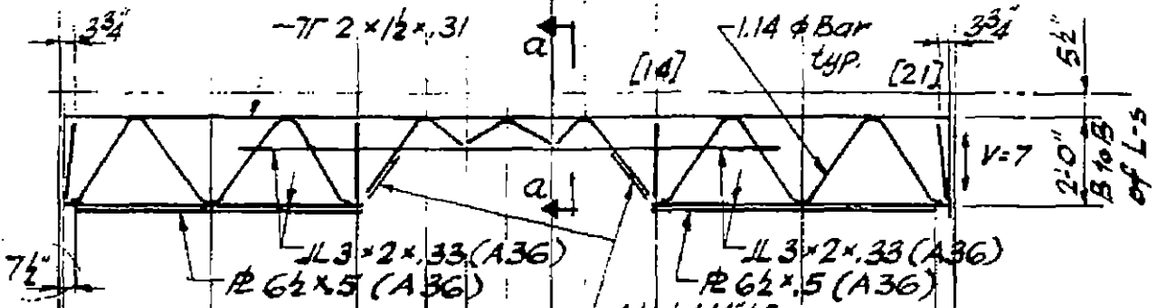

24T10D

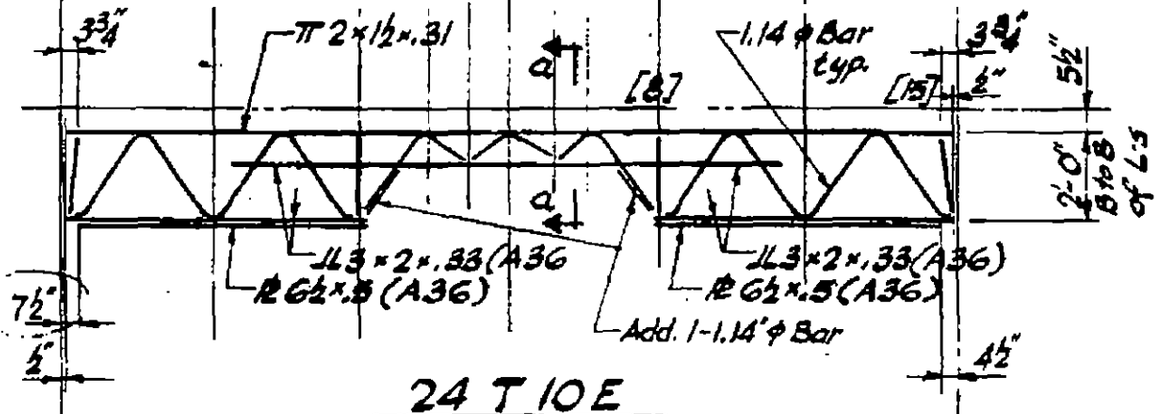

24T10E

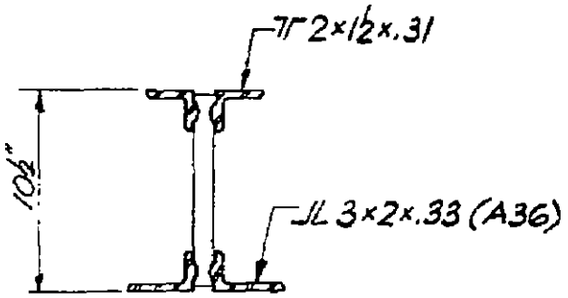

Section a-a

LICENSED PROFESSIONAL ENGINEER — LESLIE E. ROBERTSON — No. 34360 — UNIVERSITY OF THE STATE OF NEW YORK

DESIGNED

DRAWN

REVIEWED

7-AB2-13

SKILLING, HELLE, CHRISTIANSEN, ROBERTSON — Structural & Civil Engineers

PROJECT THE WORLD TRADE CENTER | TITLE FLOOR TRUSS 24T14A, 24T15A, 24T16A | DATE 8-15-68

REVISIONS

10-4-68

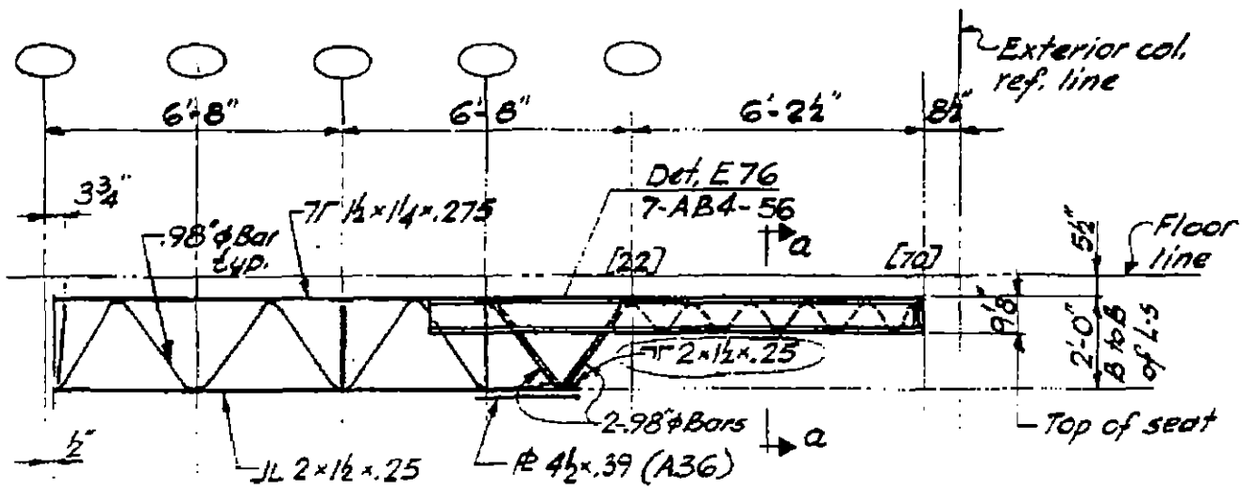

24 T 14 A

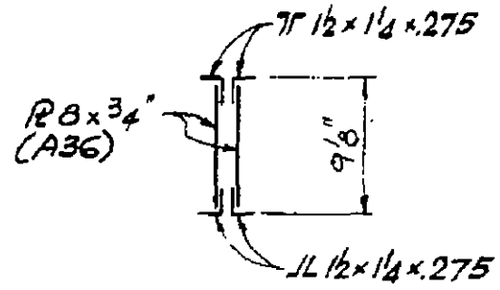

Section a-a

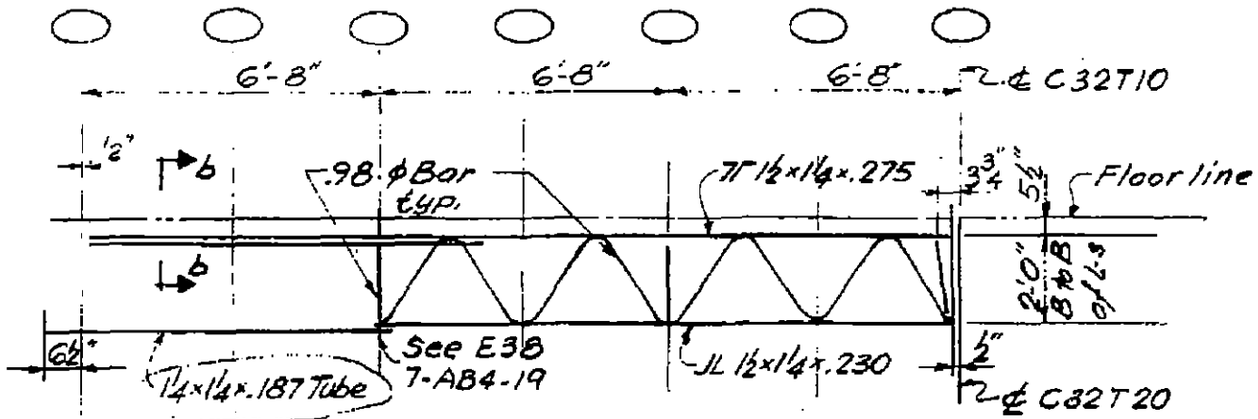

24 T 15A

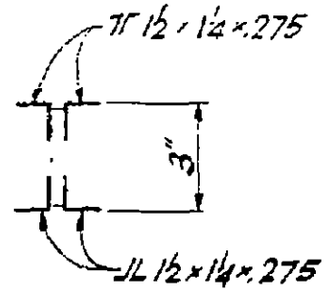

Section b-b

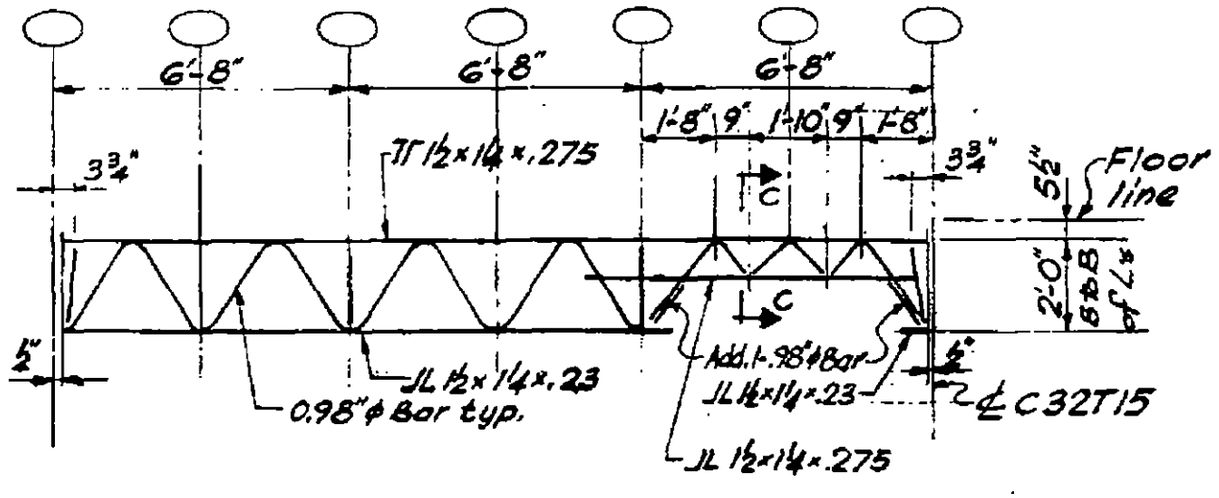

24 T 16A

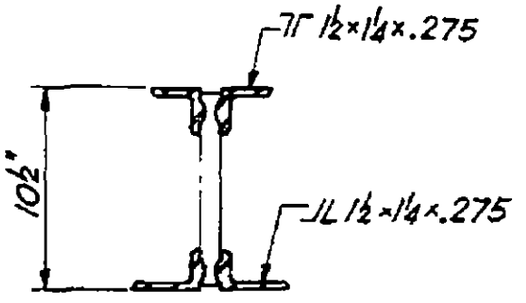

Section c-c

LICENSED PROFESSIONAL ENGINEER
LESLIE E. ROBERTSON
No. 34370
UNIVERSITY OF THE STATE OF NEW YORK

DESIGNED

DRAWN

REVIEWED

7-AB2-14

SKILLING, HELLE, CHRISTIANSEN, ROBERTSON — Structural & Civil Engineers

PROJECT: THE WORLD TRADE CENTER | TITLE: FLOOR TRUSS 24 T IIB, 24 T IIC | DATE: 8-1-68

REVISIONS

10-4-68

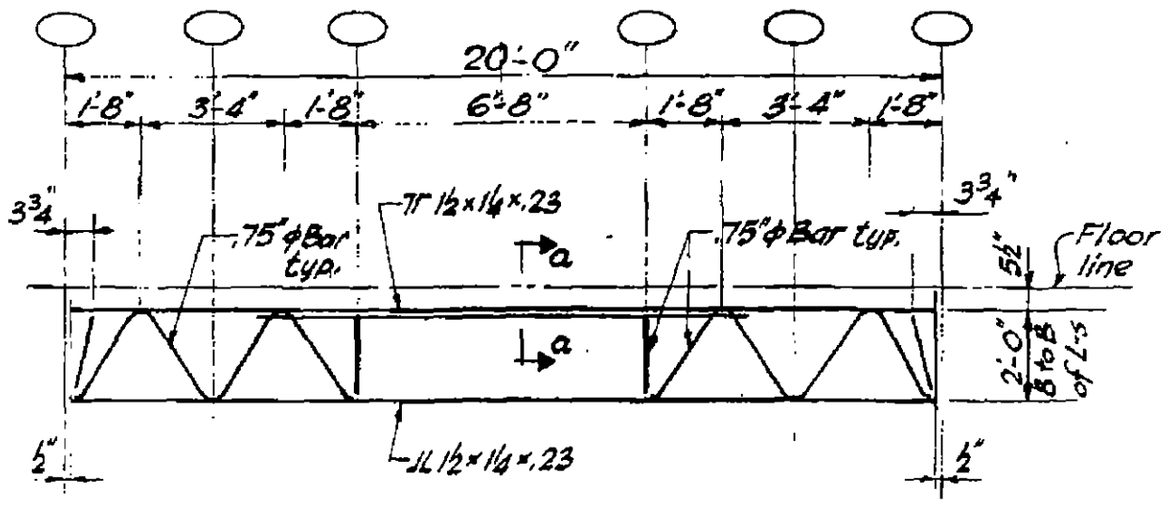

24 T IIB

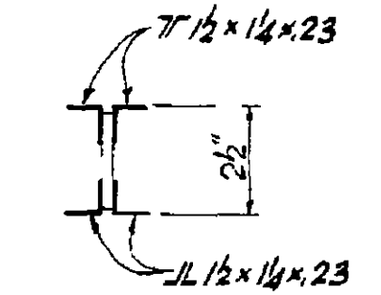

Section a-a

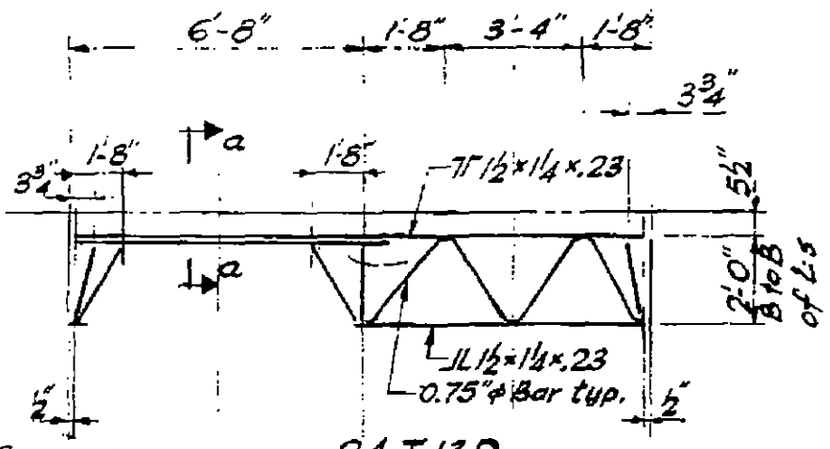

24 T 13D

See Note "A"

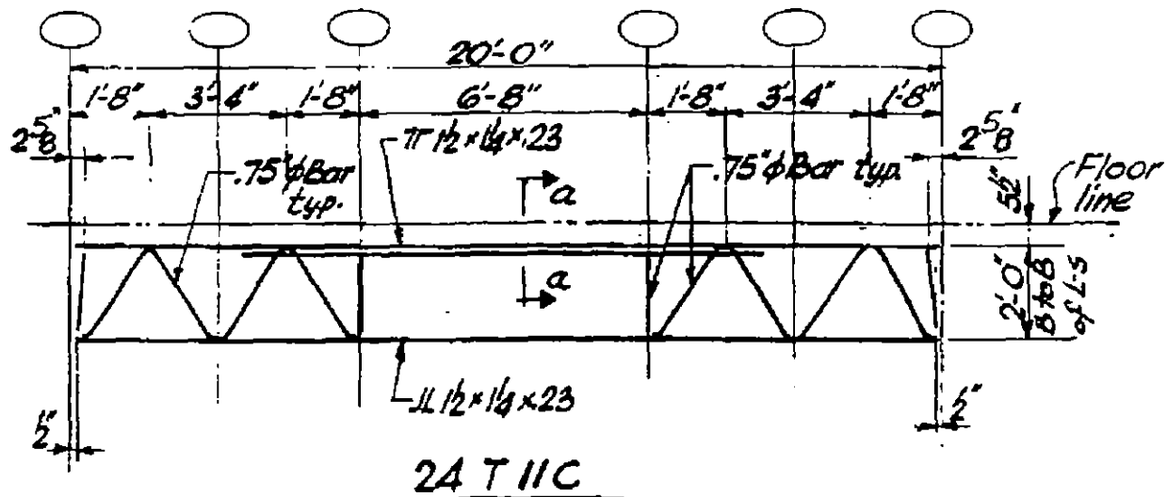

24 T IIC

Note "A":
This end of truss to adjoin panels C or CR except in panel B7-EAB5 where it should be reversed.

DESIGNED

DRAWN

REVIEWED

7-AB2-15

SKILLING - HELLE - CHRISTIANSEN - ROBERTSON Structural & Civil Engineers

PROJECT THE WORLD TRADE CENTER | TITLE FLOOR TRUSS 24T7F, 24T7G, 24T7H | DATE 1-6-69

REVISIONS

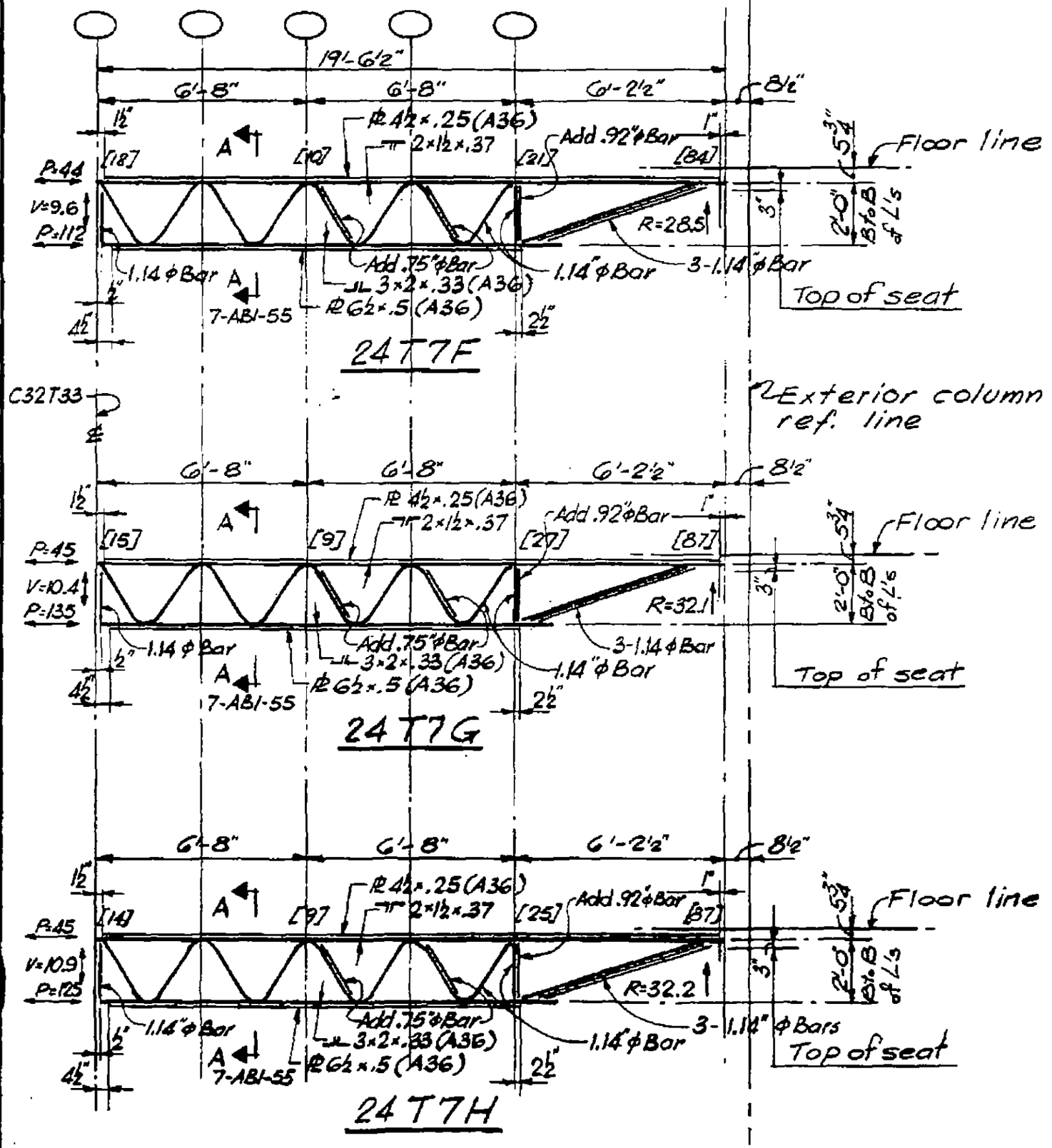

LICENSED PROFESSIONAL ENGINEER LESLIE E. ROBERTSON No. 34360 UNIVERSITY OF THE STATE OF NEW YORK

7-AB2-16

21

SKILLING, HELLE, CHRISTIANSEN, ROBERTSON — Structural & Civil Engineers

PROJECT THE WORLD TRADE CENTER | TITLE FLOOR TRUSS 24T16B, 24T16C | DATE 8-15-68

REVISIONS

10-4-68

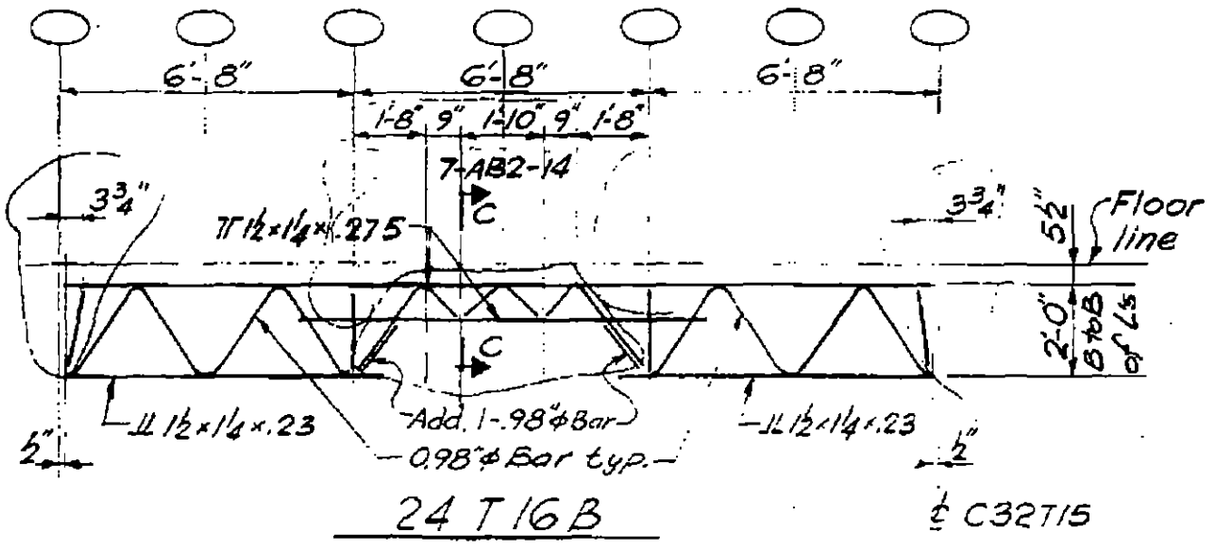

24 T 16B

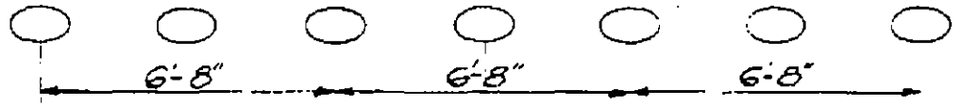

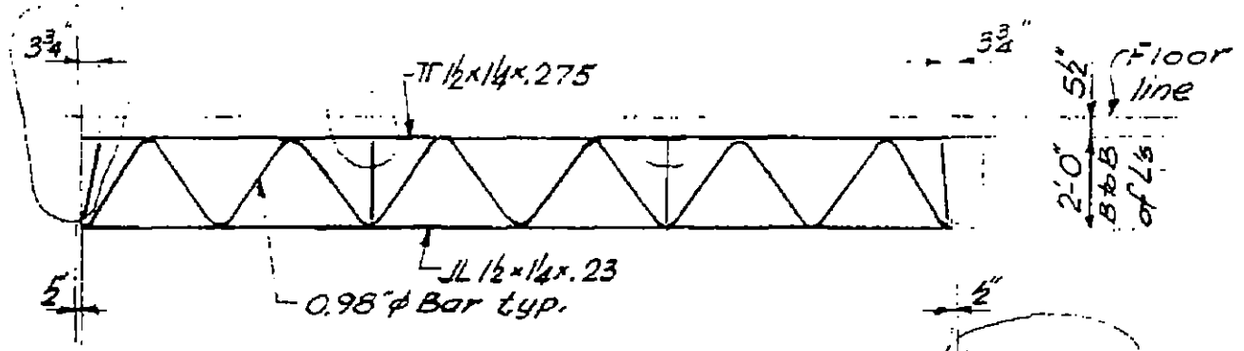

24 T 16C

LICENSED PROFESSIONAL ENGINEER
LESLIE E. ROBERTSON
No. 34360
UNIVERSITY OF THE STATE OF NEW YORK

DESIGNED

DRAWN

REVIEWED

7-AB2-17

SKILLING, HELLE, CHRISTIANSEN, ROBERTSON — Structural & Civil Engineers

PROJECT: THE WORLD TRADE CENTER | TITLE: FLOOR TRUSS 24T10F, 24T10G & 24T10H | DATE: 8-15-68

REVISIONS

10-4-68

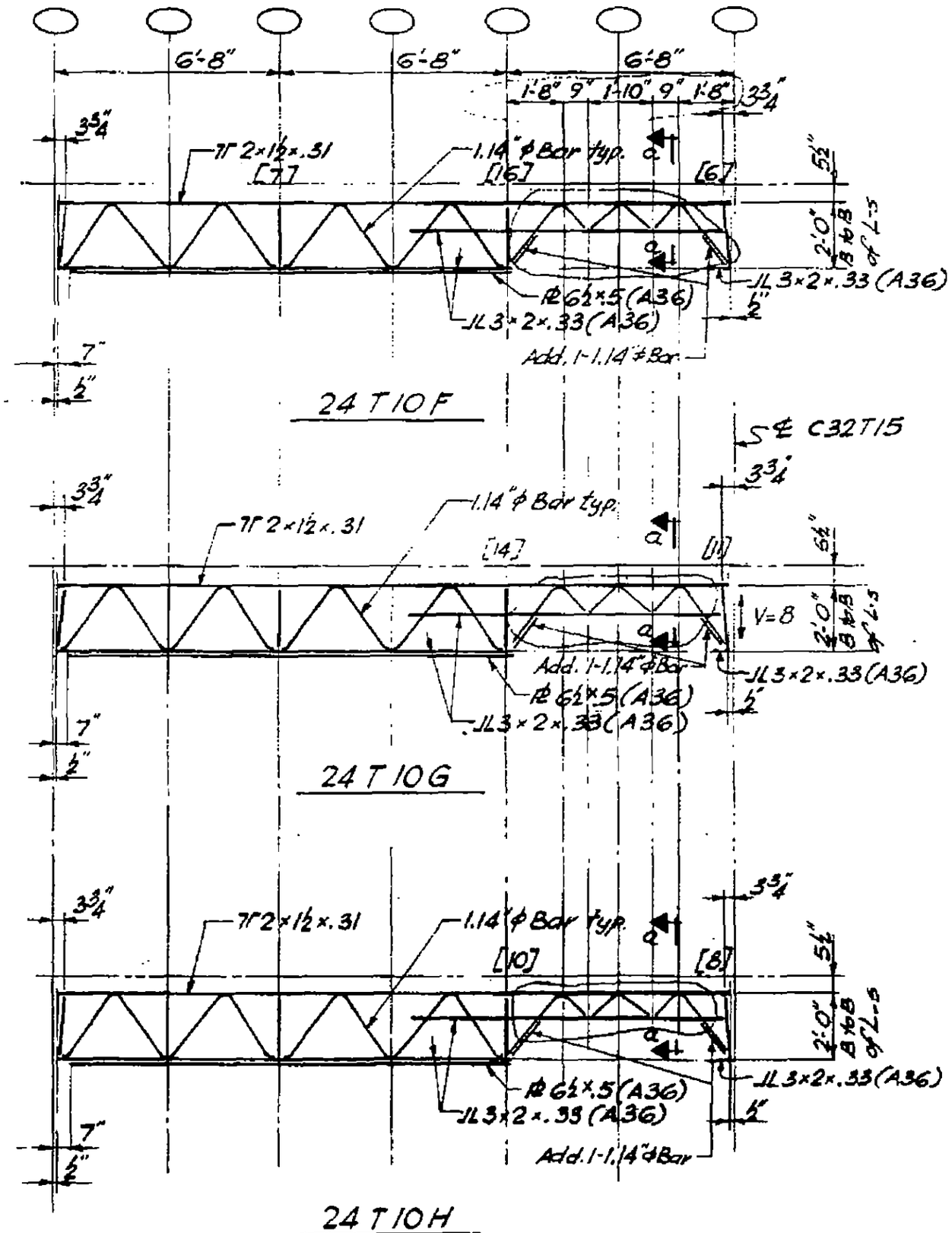

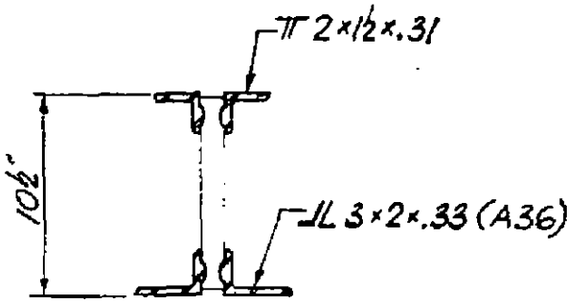

Section a-a

LICENSED PROFESSIONAL ENGINEER
LESLIE E. ROBERTSON
No. 34360
UNIVERSITY OF THE STATE OF NEW YORK

DESIGNED

DRAWN

REVIEWED

7-AB2-18

SKILLING - HELLE - CHRISTIANSEN - ROBERTSON Structural & Civil Engineers

PROJECT THE WORLD TRADE CENTER | TITLE FLOOR TRUSS 24T8C, 8D, 8E | DATE 1-6-69

REVISIONS

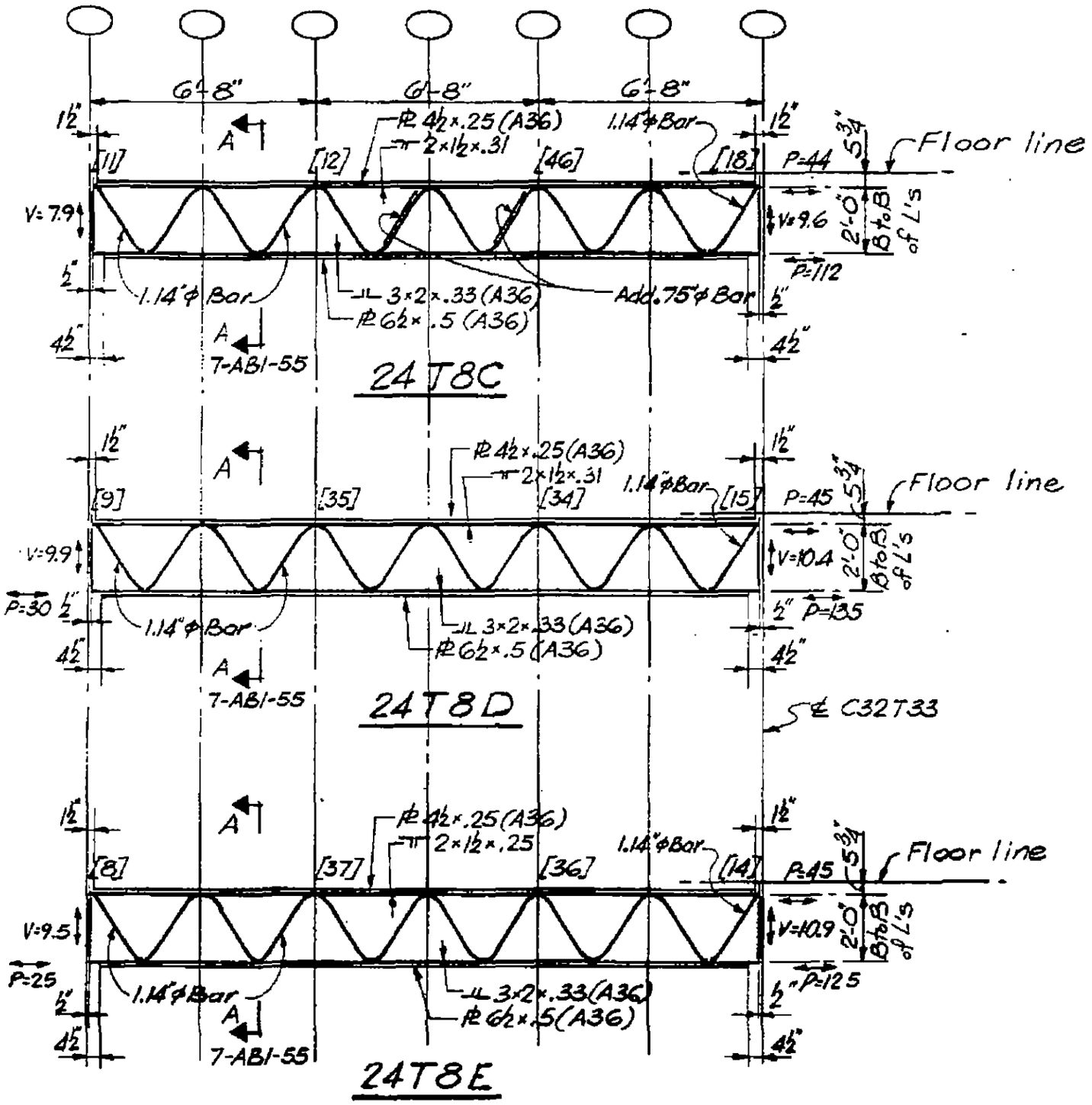

LICENSED PROFESSIONAL ENGINEER
LESLIE E. ROBERTSON
No. 34360
UNIVERSITY OF THE STATE OF NEW YORK

7-AB2-19

SKILLING - HELLE - CHRISTIANSEN - ROBERTSON Structural & Civil Engineers

PROJECT THE WORLD TRADE CENTER | TITLE FLOOR TRUSSES 24T10J, 10K & 10L | DATE 1-6-69

REVISIONS

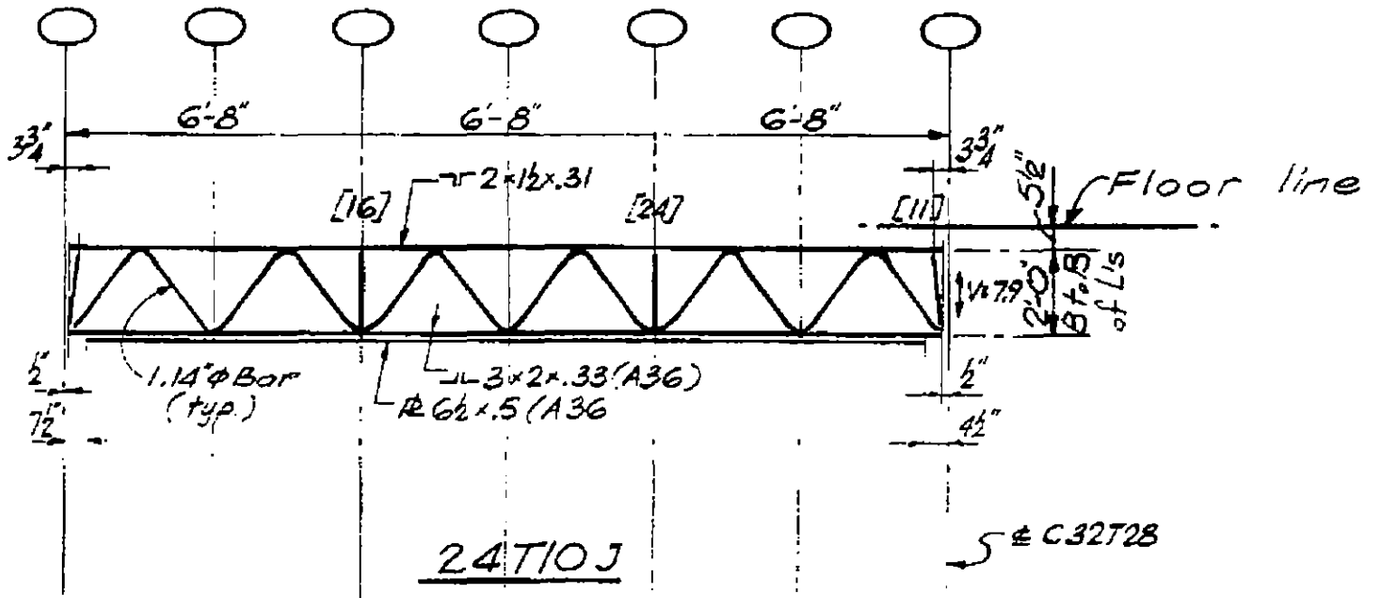

24T10J

℄ C32T28

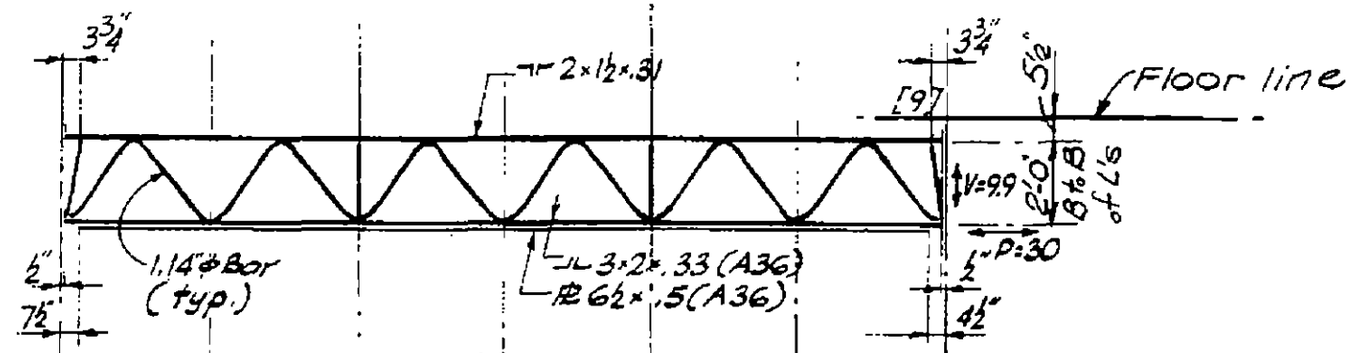

24T10K

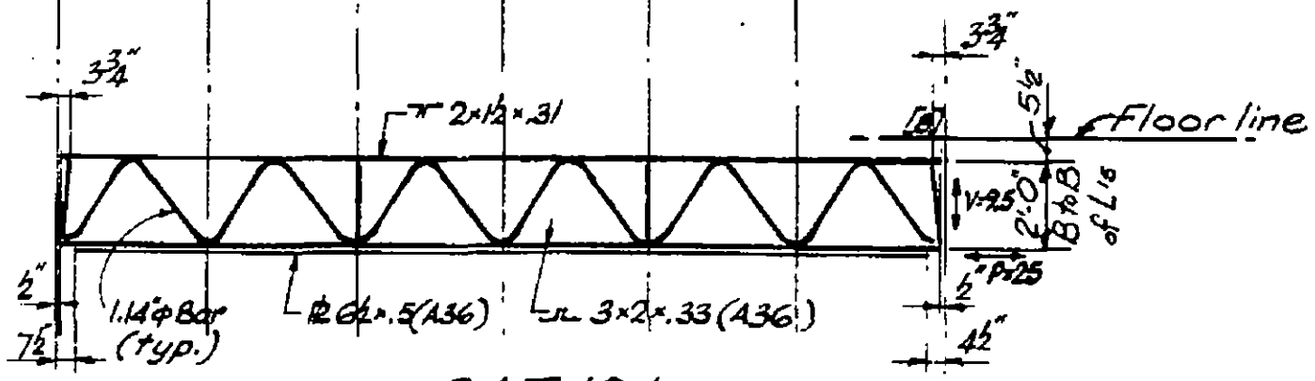

24T10L

LICENSED PROFESSIONAL ENGINEER
LESLIE E. ROBERTSON
No. 34360
UNIVERSITY OF THE STATE OF NEW YORK

7-AB2-20

SKILLING - HELLE - CHRISTIANSEN - ROBERTSON — Structural & Civil Engineers

PROJECT: THE WORLD TRADE CENTER | TITLE: FLOOR PANELS - INDEX & GENERAL NOTES | DATE: 10/20/67

REVISIONS

1-3-68
2-15-68
4-1-68
1-3-69
1-6-69
2-3-69
3-3-69
4-1-69
Printed 5-1-69

7-AB3- 1 Floor Panel - Index & General Notes
7-AB3- 2 Floor Panel Dimension Schedule 1
7-AB3- 3 Floor Panel A1
7-AB3- 4 Floor Panel A1 G/E & A1 J/G
7-AB3- 5 Floor Panel B1
7-AB3- 6 Floor Panel BR1
7-AB3- 7 Floor Panel C1
7-AB3- 8 Floor Panel CR1
7-AB3- 9 Floor Panel D1
7-AB3-10 Floor Panel DR1
7-AB3-11 Floor Panel E1
7-AB3-12 Floor Panel ER1
7-AB3-13 Floor Panel F1
7-AB3-14 Floor Panel FR1
7-AB3-15 Floor Panel G1
7-AB3-16 Floor Panel GR1
7-AB3-17 Floor Panel H1
7-AB3-18 Floor Panel HR1 & HR6
7-AB3-19 Floor Panel J1
7-AB3-20 Floor Panel K1
7-AB3-21 Floor Panel KR1
7-AB3-22 Floor Panel M1
7-AB3-23 Floor Panel MR1
7-AB3-24 Floor Panel Dimension Schedule 2
7-AB3-25 Floor Panel A2
7-AB3-26 Floor Panel B2
7-AB3-27 Floor Panel BR2
7-AB3-28 Floor Panel C2
7-AB3-29 Floor Panel CR2
7-AB3-30 Floor Panel D2
7-AB3-31 Floor Panel DR2
7-AB3-32 Floor Panel E2
7-AB3-33 Floor Panel ER2
7-AB3-34 Floor Panel F2
7-AB3-35 Floor Panel FR2
7-AB3-36 Floor Panel G2
7-AB3-37 Floor Panel GR2
7-AB3-38 Floor Panel H2
7-AB3-39 Floor Panel HR2 & 7
7-AB3-40 Floor Panel J2
7-AB3-41 Floor Panel Dimension Schedule 3
7-AB3-42 Floor Panel A3
7-AB3-43 Floor Panel B3
7-AB3-44 Floor Panel BR3
7-AB3-45 Floor Panel C3
7-AB3-46 Floor Panel CR3
7-AB3-47 Floor Panel D3
7-AB3-48 Floor Panel DR3
7-AB3-49 Floor Panel E3
7-AB3-50 Floor Panel ER3
7-AB3-51 Floor Panel F3
7-AB3-52 Floor Panel FR3
7-AB3-53 Floor Panel A8
7-AB3-54 Floor Panel B8
7-AB3-55 Floor Panel BR8
7-AB3-56 Floor Panel C8
7-AB3-57 Floor Panel CR8
7-AB3-58 Floor Panel D8
7-AB3-59 Floor Panel DR8
7-AB3-60 Floor Panel E8
7-AB3-61 Floor Panel ER8
7-AB3-62 Floor Panel F8
7-AB3-63 Floor Panel FR8
7-AB3-70 Floor Panel Dimension Schedule 5
7-AB3-71 Floor Panel D5
7-AB3-72 Floor Panel DR5
7-AB3-73 Floor Panel E5
7-AB3-74 Floor Panel ER5
7-AB3-75 Floor Panel F5
7-AB3-76 Floor Panel FR5
7-AB3-77 Floor Panel C6
7-AB3-78 Floor Panel CR6
7-AB3-79 Floor Panel C7
7-AB3-80 Floor Panel CR7

GENERAL NOTES:

1. Material for steel deck supporting members L 3 x 2 to be Fy = 50 unless otherwise noted.

2. Deck beam angles and miscellaneous angles called for on floor panel drawings have long legs vertical.

3. Except as otherwise indicated, all L 3 x 2 deck supports shall be continuous.

4. Numbers shown on floor panel drawings thus ( ) are vertical interaction forces in Kips between each C32 truss and the 24T truss.

   Where no interaction force is given, the connection shall be proportioned for a minimum connection of 5 Kips. All connections shall be proportioned for a tensile as well as a compressive interaction force of the specified value.

5. Contractor shall supply representative calculations and/or test results for each connection proportioned by the Contractor. All connections, details and the like are subject to approval by the Engineer.

6. Connection of L 3 x 2 deck support beams to C32 trusses shall be proportioned for a minimum reaction of 6 Kips.

LICENSED PROFESSIONAL ENGINEER — LESLIE E. ROBERTSON — No. 54360 — UNIVERSITY OF THE STATE OF NEW YORK

97

7-AB3-1

SKILLING - HELLE - CHRISTIANSEN - ROBERTSON Structural & Civil Engineers

PROJECT THE WORLD TRADE CENTER | TITLE FLOOR ~~PANEL - DIMENSION~~ SCHEDULE I | DATE 10-26-67

REVISIONS

1-3-68

PANEL NO.									OUT TO OUT PANEL DIM. L	BOLT HOLE DIMENSION M	DIMENSION A
A1A	B1A	BR1A	C1A	CR1A	D1A	DR1A	E1A	ER1A	59' – 9"	59' - 3¾"	5'- 2½"
A1B	B1B	BR1B	C1B	CR1B	D1B	DR1B	E1B	ER1B	59' – 8½"	59' - 3¼"	5'- 2"
A1C	B1C	BR1C	C1C	CR1C	D1C	DR1C	E1C	ER1C	59' – 8"	59' - 2¾"	5'- 1½"
A1D	B1D	BR1D	C1D	CR1D	D1D	DR1D	E1D	ER1D	59' – 5"	58' - 11¾"	4'- 10½"
A1E	B1E	BR1E	C1E	CR1E	D1E	DR1E	E1E	ER1E	59' – 3"	58' - 9¾"	4'- 8½"
A1F	B1F	BR1F	C1F	CR1F	D1F	DR1F	E1F	ER1F	59' – 2"	58' - 8¾"	4'- 7½"
A1G	B1G	BR1G	C1G	CR1G	D1G	DR1G	E1G	ER1G	58' – 11"	58' - 5¾"	4'- 4½"
A1H	B1H	BR1H	C1H	CR1H	D1H	DR1H	E1H	ER1H	58' – 8"	58' - 2¾"	4'- 1½"
A1J	B1J	BR1J	C1J	CR1J	D1J	DR1J	E1J	ER1J	58' – 7"	58' - 1¾"	4'- 0½"
A1K	B1K	BR1K	C1K	CR1K	D1K	DR1K	E1K	ER1K	58' – 6"	58' - 0¾"	3'- 11½"
A1M	B1M	BR1M	C1M	CR1M	D1M	DR1M	E1M	ER1M	58' – 3"	57' - 9¾"	3'- 8½"
A1N	B1N	BR1N	C1N	CR1N	D1N	DR1N	E1N	ER1N	57' – 9"	57' - 3¾"	3'- 2½"
A1P	B1P	BR1P	C1P	CR1P	D1P	DR1P	E1P	ER1P	57' – 7"	57' - 1¾"	3'- 0½"

LICENSED PROFESSIONAL ENGINEER LESLIE E. ROBERTSON No. 24360 STATE OF NEW YORK

7-AB3-2

SKILLING - HELLE - CHRISTIANSEN - ROBERTSON Structural & Civil Engineers

PROJECT THE WORLD TRADE CENTER | TITLE FLOOR PANEL A1 | DATE 10-70-67

REVISIONS

1-3-68
1-26-68
2-15-68
4-1-68
7-22-68
10-15-68

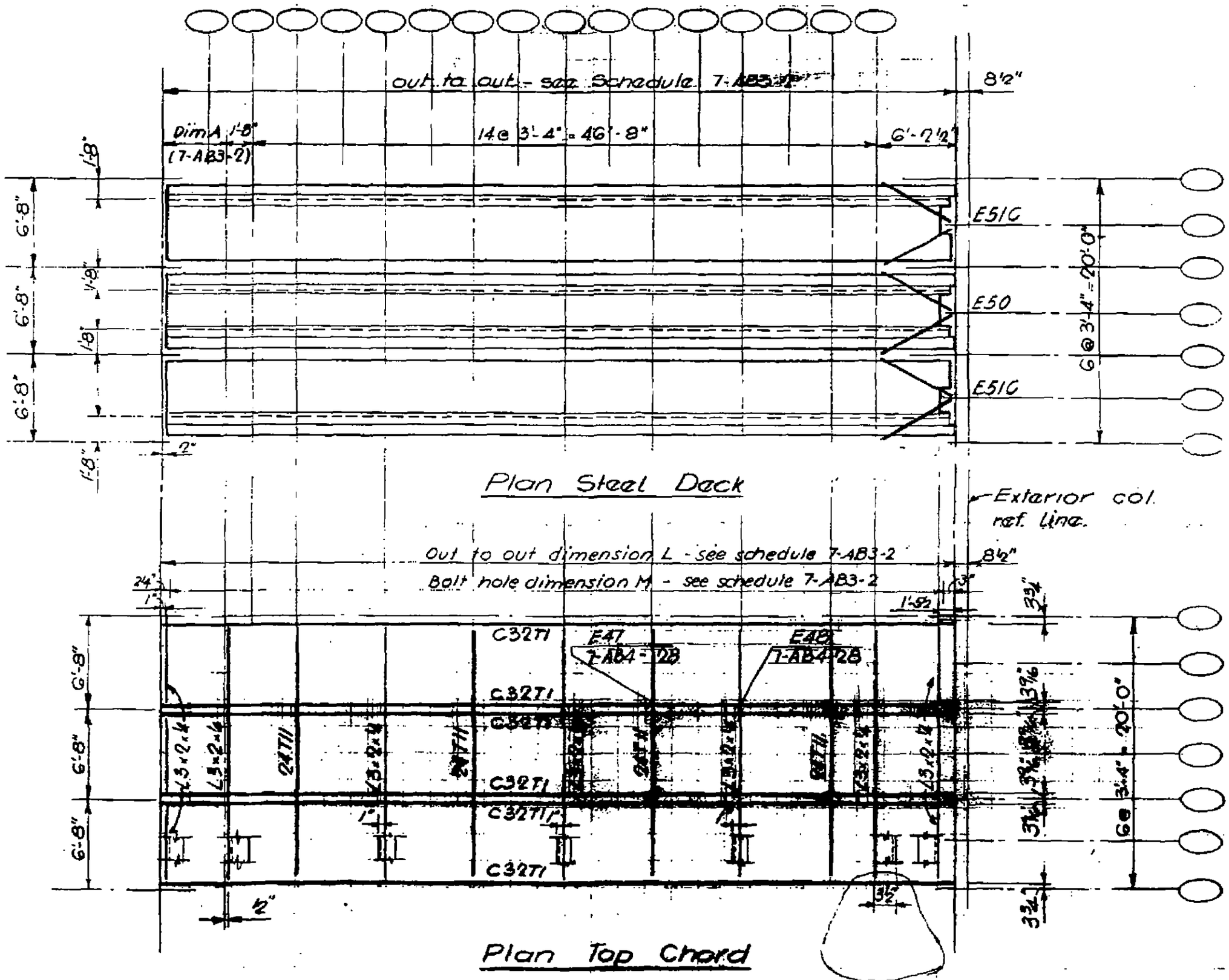

7-AB3-3

LICENSED PROFESSIONAL ENGINEER
LESLIE E. ROBERTSON
No. 34360
REGISTERED IN THE STATE OF NEW YORK

45

SKILLING - HELLE - CHRISTIANSEN - ROBERTSON Structural & Civil Engineers

PROJECT THE WORLD TRADE CENTER | TITLE FLOOR PANEL A1G/E & A1J/G | DATE 10-20-67

REVISIONS

1-3-68
1-26-68
2-15-68
4-1-68
7-22-68
10-15-68

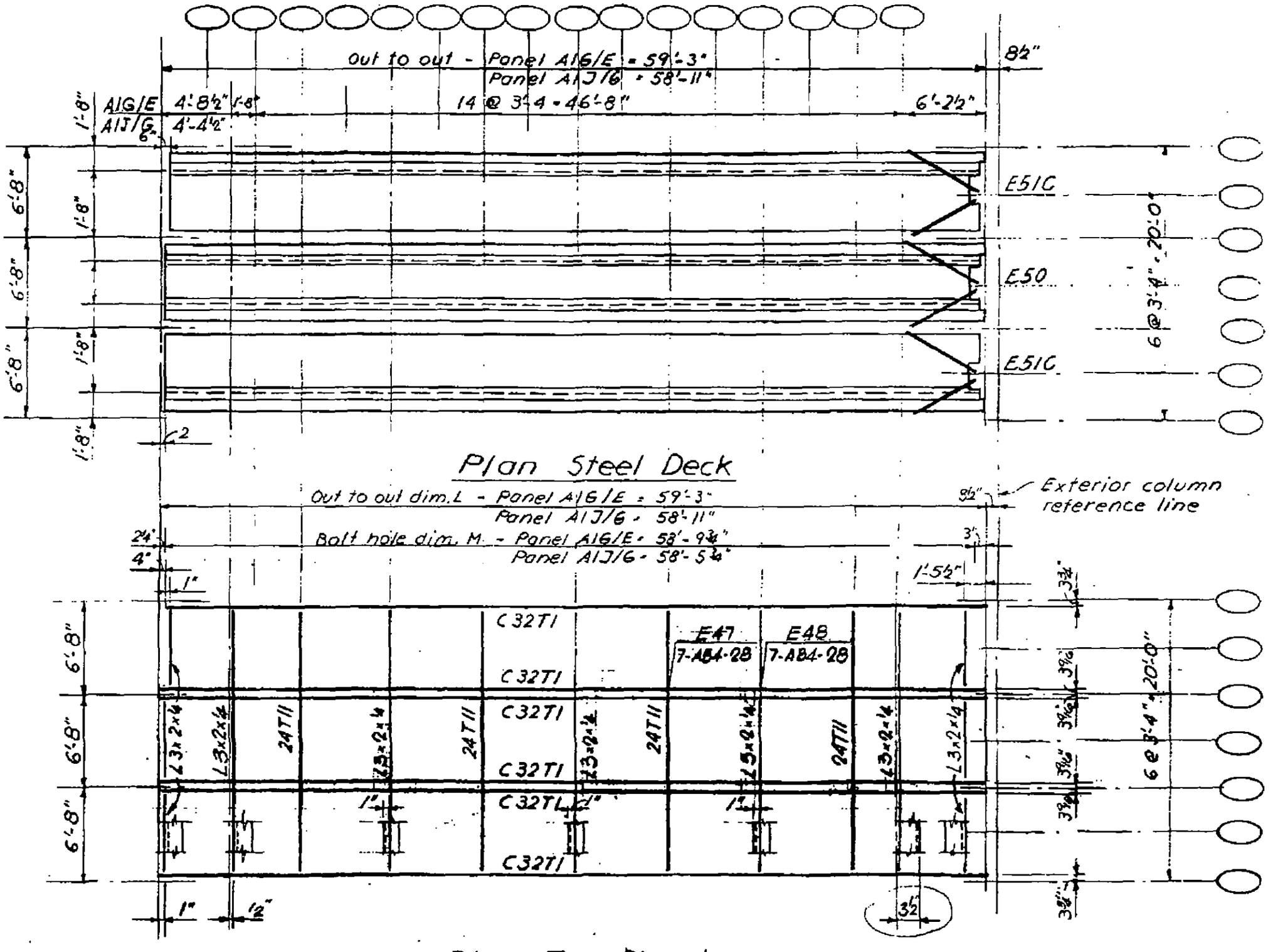

Plan Steel Deck

Plan Top Chord

LICENSED PROFESSIONAL ENGINEER
LESLIE E. ROBERTSON
No. 34360
STATE OF NEW YORK

7-AB3-4

SKILLING - HELLE - CHRISTIANSEN - ROBERTSON Structural & Civil Engineers

PROJECT THE WORLD TRADE CENTER | TITLE FLOOR PANEL B1 | DATE 10-20-67

REVISIONS

1-3-68
1-26-68
2-15-68
4-1-68
7-22-68
10-15-68

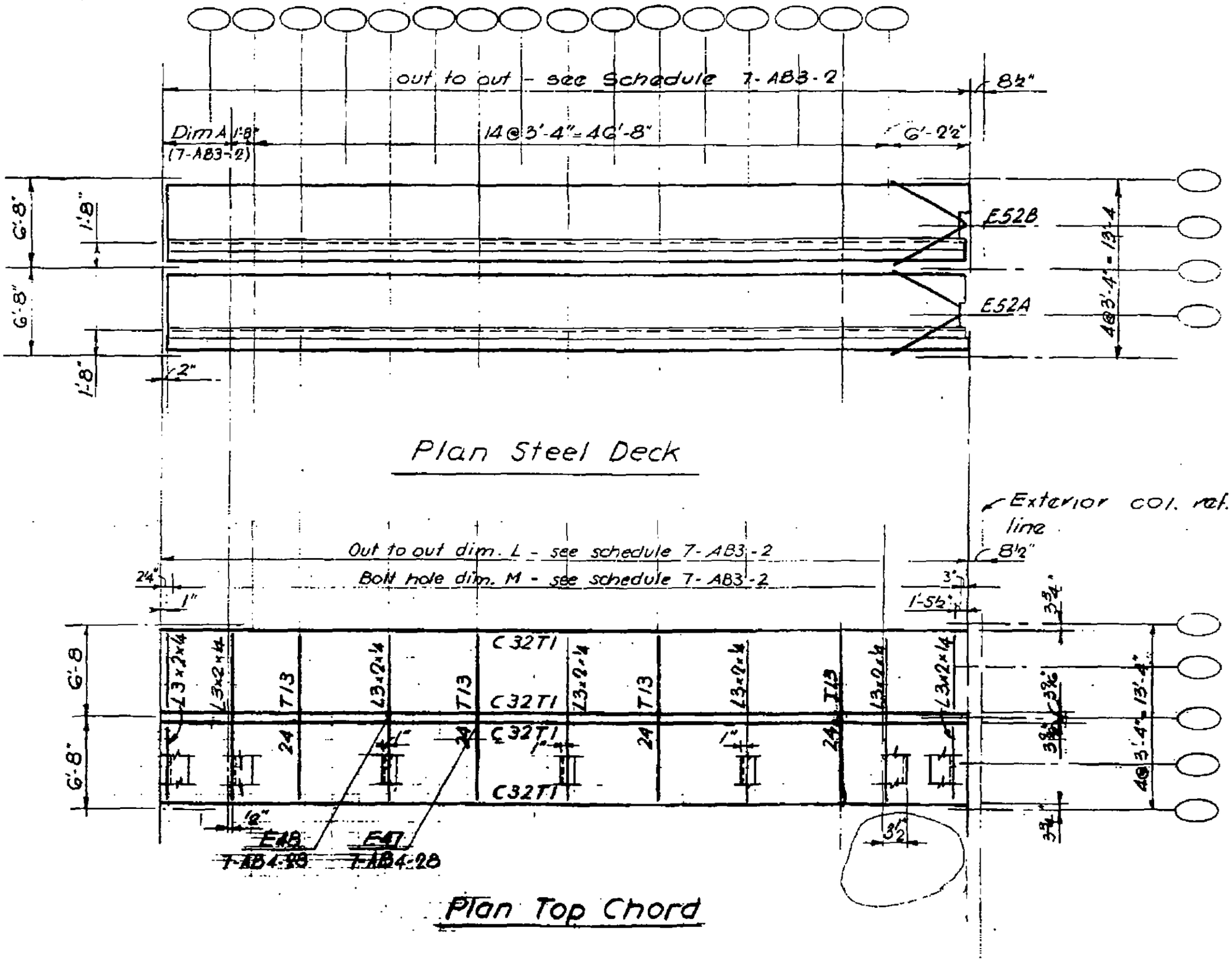

LICENSED PROFESSIONAL ENGINEER
CARLET E. ROBERTSON
14560
STATE OF NEW YORK

7-AB3-5

27

SKILLING - HELLE - CHRISTIANSEN - ROBERTSON Structural & Civil Engineers

PROJECT THE WORLD TRADE CENTER | TITLE FLOOR PANEL BR1 | DATE 10·20·67

REVISIONS

1-3-68
1-26-68
2-15-68
4-1-68
7-22-68
10-15-68

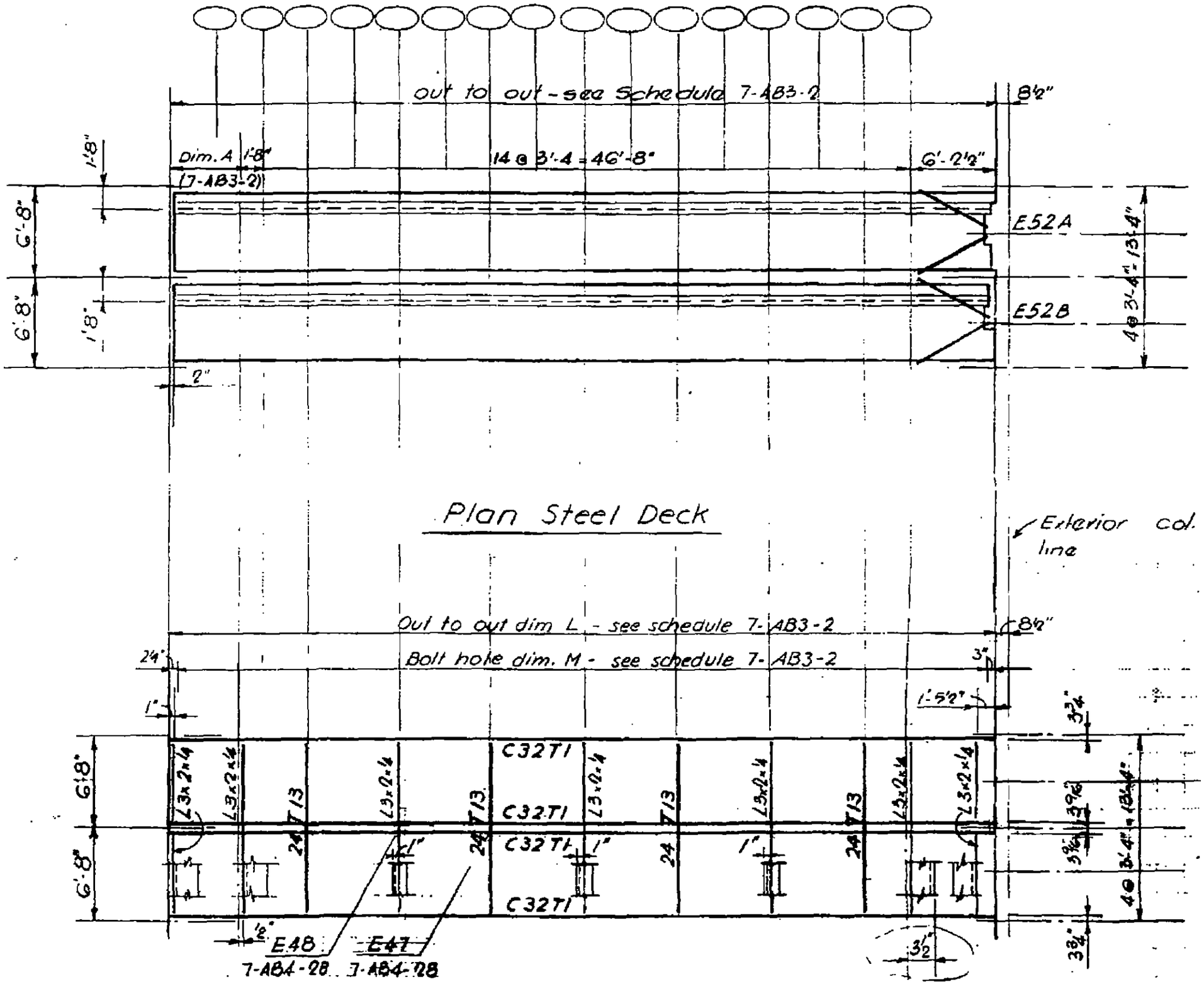

Plan Steel Deck

Plan Top Chord

LICENSED PROFESSIONAL ENGINEER LESLIE E. ROBERTS NO. 34010 STATE OF NEW YORK

SKILLING - HELLE - CHRISTIANSEN - ROBERTSON Structural & Civil Engineers

PROJECT THE WORLD TRADE CENTER | TITLE FLOOR PANEL C1 | DATE 10-20-67

REVISIONS

1-3-68
1-26-68
2-15-68
4-1-68
7-22-68
10-15-68

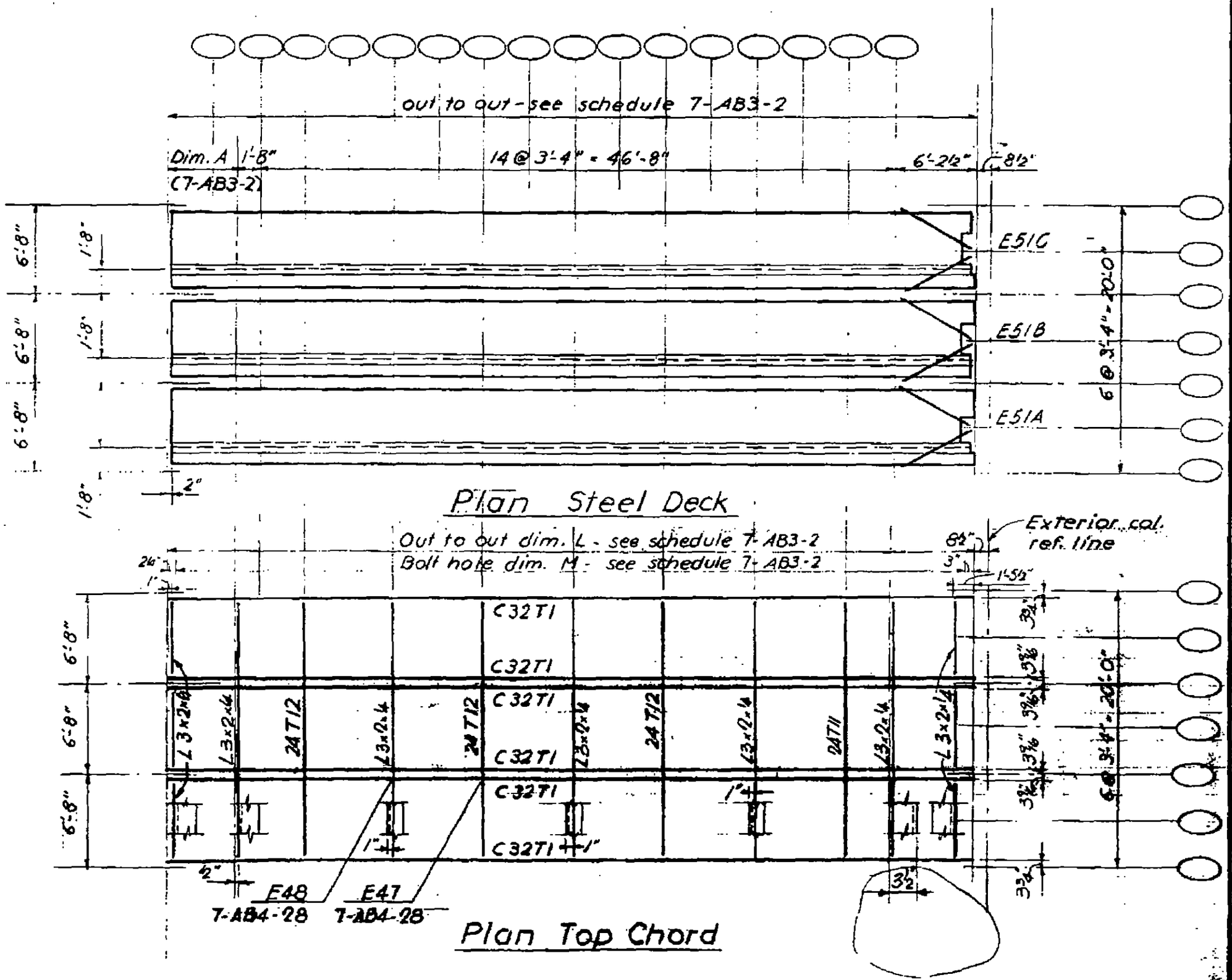

Plan Steel Deck

Plan Top Chord

LICENSED PROFESSIONAL ENGINEER
LESLIE E. ROBERTSON
No. 34360
REGISTERED IN THE STATE OF NEW YORK

7-AB3-2

29

SKILLING - HELLE - CHRISTIANSEN - ROBERTSON Structural & Civil Engineers

PROJECT THE WORLD TRADE CENTER | TITLE FLOOR PANEL CR1 | DATE 10·20·67

REVISIONS

1-3-68
1-26-68
2-15-68
4-1-68
7-22-68
10-15-68

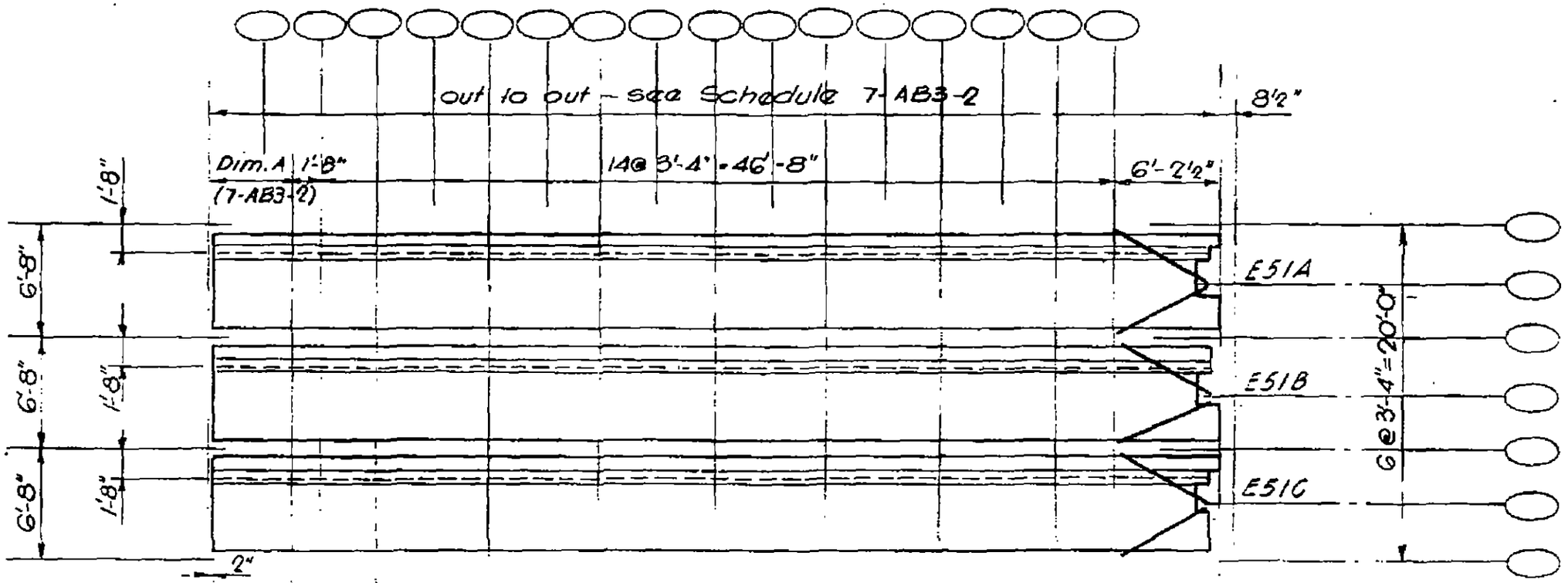

Plan Steel Deck

Out to out dim. L - see schedule 7-AB3-2
Bolt hole dim. M - see schedule 7-AB3-2

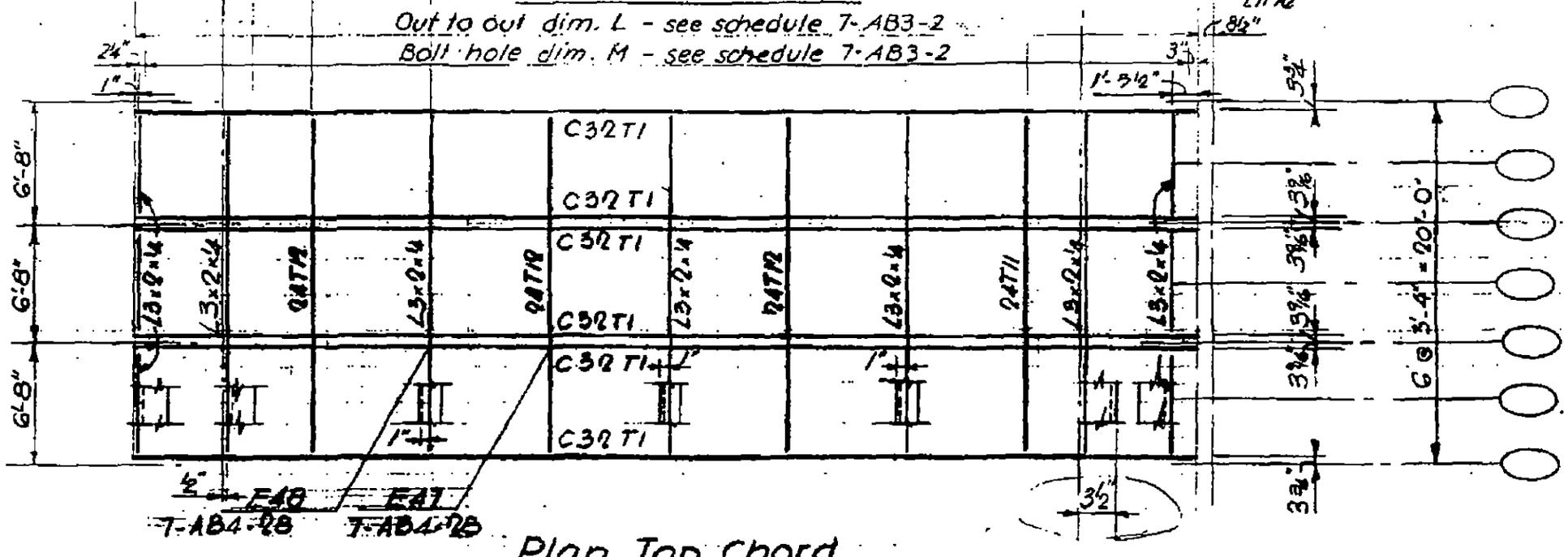

Plan Top Chord

LICENSED PROFESSIONAL ENGINEER
LESLIE E. ROBERTSON
No. 34360
STATE OF NEW YORK

7-AB3-8

SKILLING - HELLE - CHRISTIANSEN - ROBERTSON Structural & Civil Engineers

PROJECT THE WORLD TRADE CENTER | TITLE FLOOR PANEL D1 | DATE 10-20-67

REVISIONS

1-3-68
1-26-68
4-1-68
4-15-68
7-22-68
10-15-68

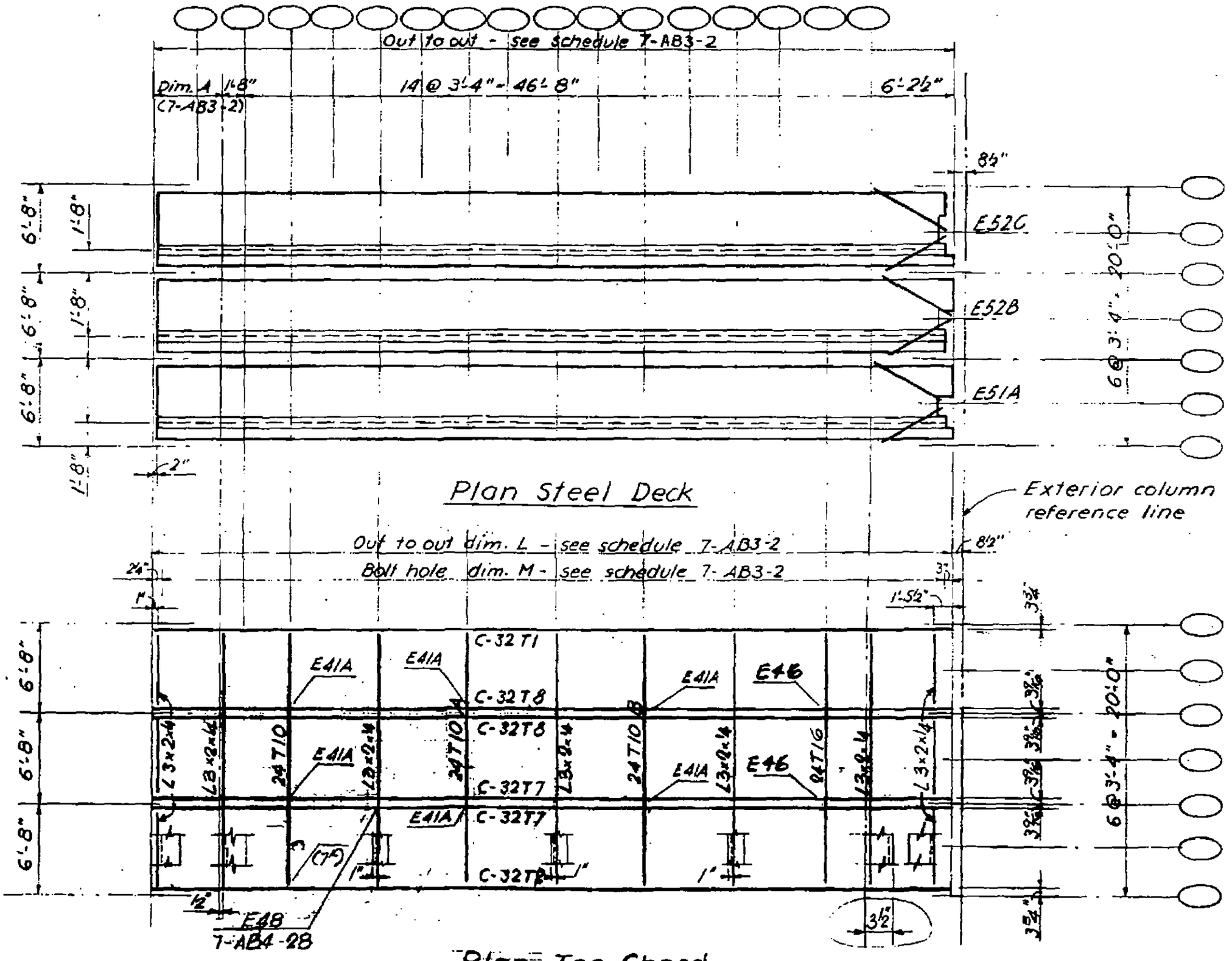

Plan Steel Deck

Plan Top Chord

E46 see 7-AB4-22.1
E41A see 7-AB4-22

LICENSED PROFESSIONAL ENGINEER LESLIE E. ROBERTSON NO. 34360 STATE OF NEW YORK

7-AB3-9

SKILLING - HELLE - CHRISTIANSEN - ROBERTSON Structural & Civil Engineers

PROJECT THE WORLD TRADE CENTER | TITLE FLOOR PANEL DRI | DATE 10-20-67

REVISIONS

1-3-68
1-26-68
4-1-68
4-15-68
7-22-68
10-15-68

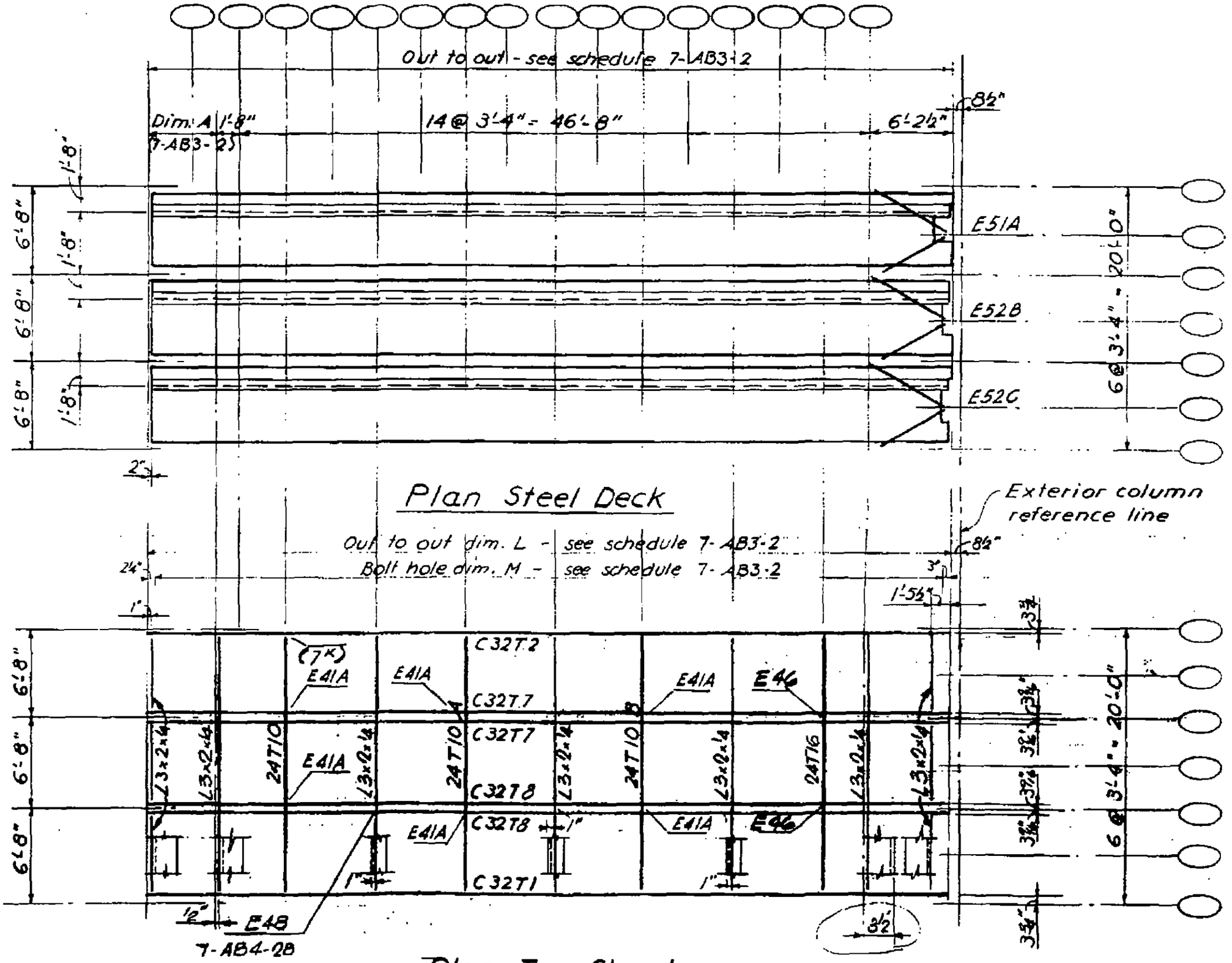

LICENSED PROFESSIONAL ENGINEER LESLIE E. ROBERTSON No. 34360 UNIVERSITY OF THE STATE

32

7-AB3-10

SKILLING - HELLE - CHRISTIANSEN - ROBERTSON Structural & Civil Engineers

PROJECT THE WORLD TRADE CENTER | TITLE FLOOR PANEL E1 | DATE 10-20-67

REVISIONS

1-3-68
1-26-68
4-1-68
4-15-68
5.10-68
7-22-68
10-15-68

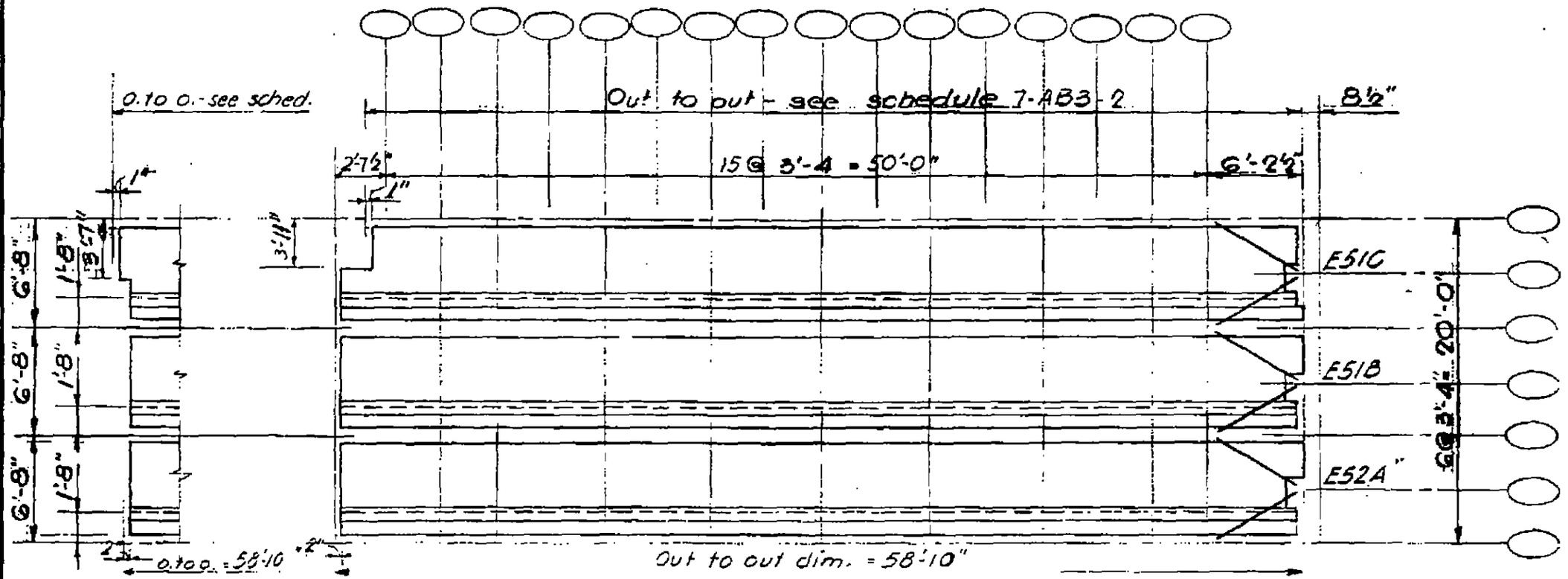

Plan Steel Deck

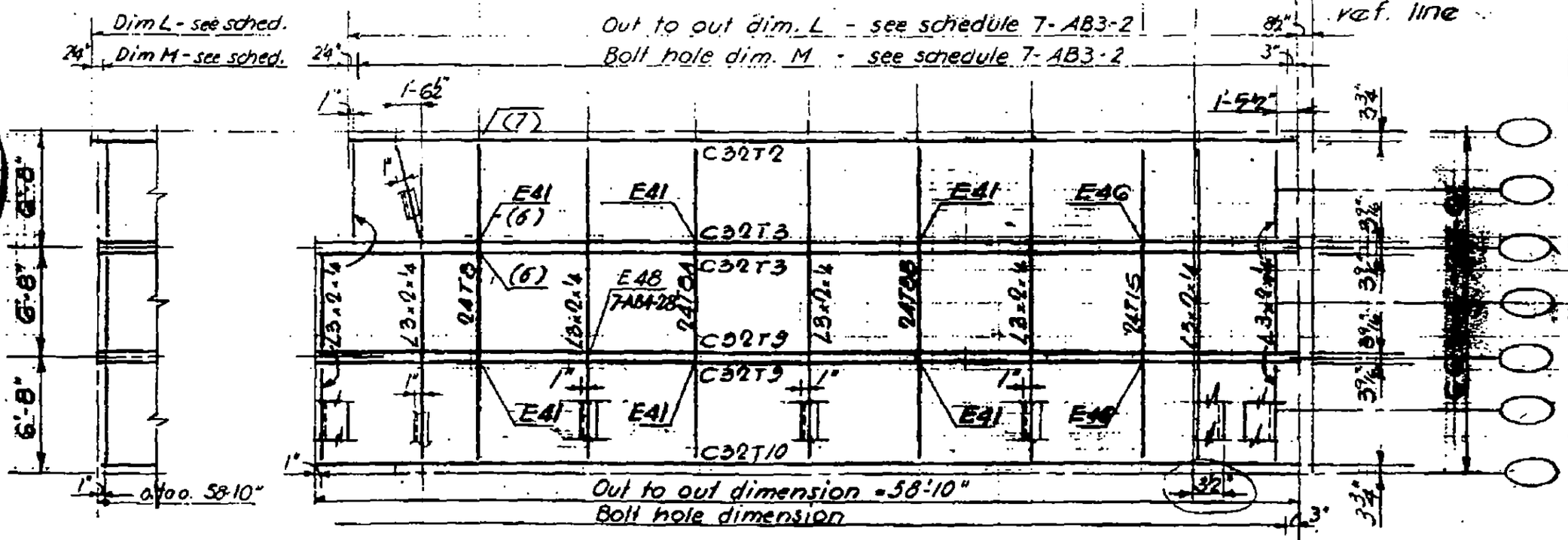

Plan Top Chord

E41 see 7-AB4-22
E46 see 7-AB4-22.1

7-AB3-6

33

SKILLING - HELLE - CHRISTIANSEN - ROBERTSON Structural & Civil Engineers

PROJECT THE WORLD TRADE CENTER | TITLE FLOOR PANEL ER1 | DATE 10-20-67

REVISIONS

1-3-68
1-26-68
4-1-68
4-15-68
5-10-68
7-22-68
10-15-68

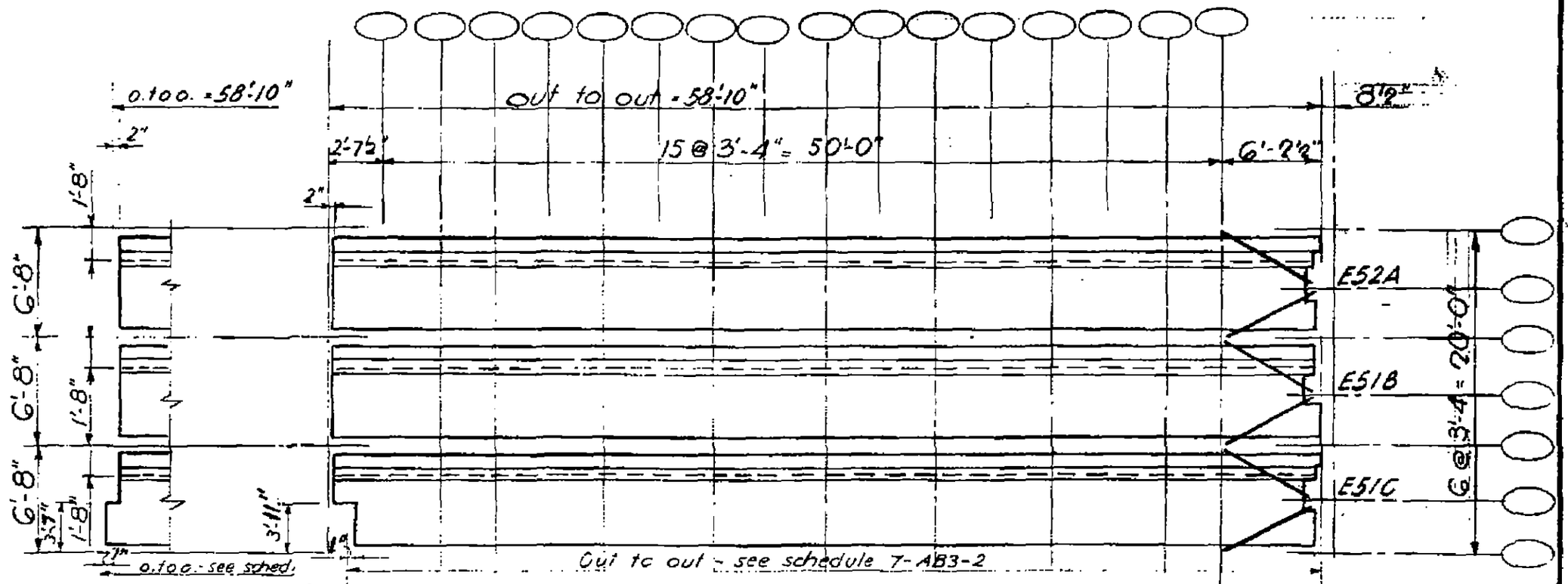

Plan Steel Deck

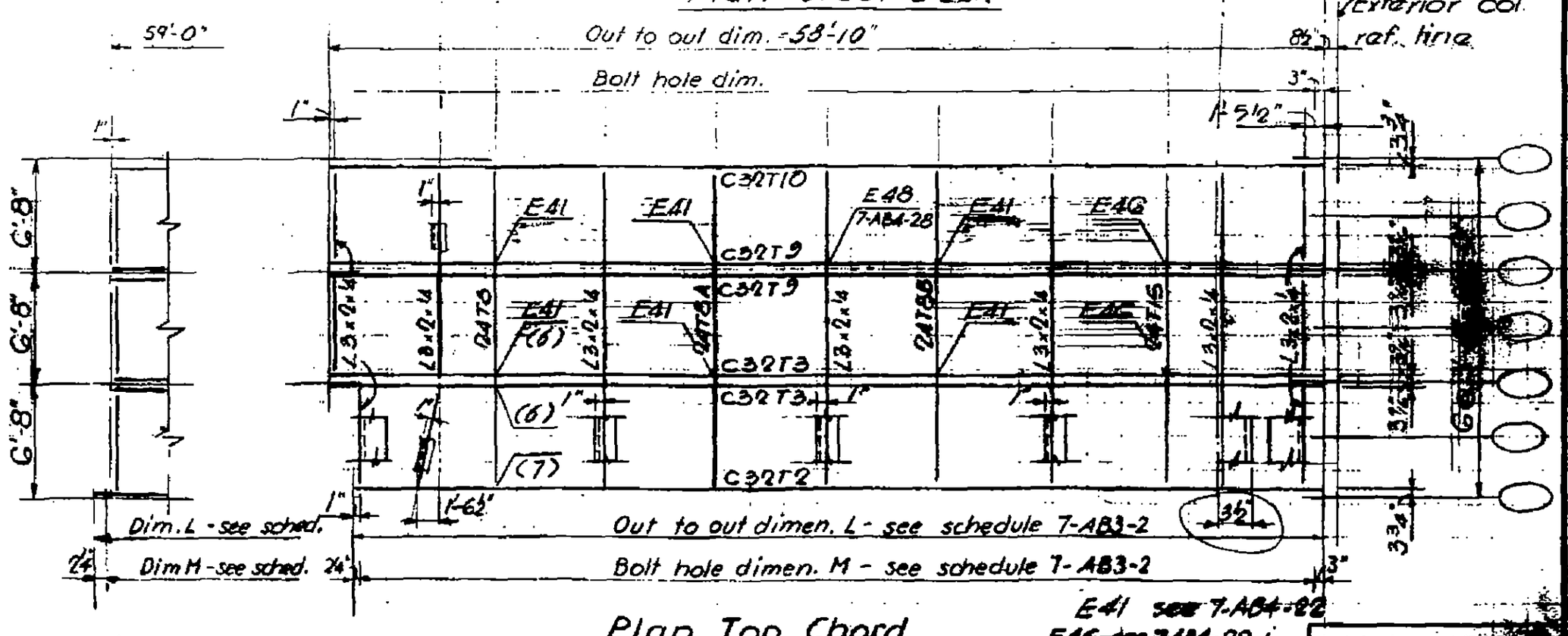

Plan Top Chord

E41 see 7-AB4-22
E46 see 7-AB4-22.1

7-AB3-12

LICENSED PROFESSIONAL ENGINEER LESLIE E. ROBERTSON No. 34360 STATE OF THE STATE OF ILL.

34

SKILLING - HELLE - CHRISTIANSEN - ROBERTSON Structural & Civil Engineers

PROJECT THE WORLD TRADE CENTER | TITLE FLOOR PANEL F1 | DATE 10-20-67

REVISIONS

1-3-68
1-26-68
4-1-68
5-10-68
7-22-68
10-15-68

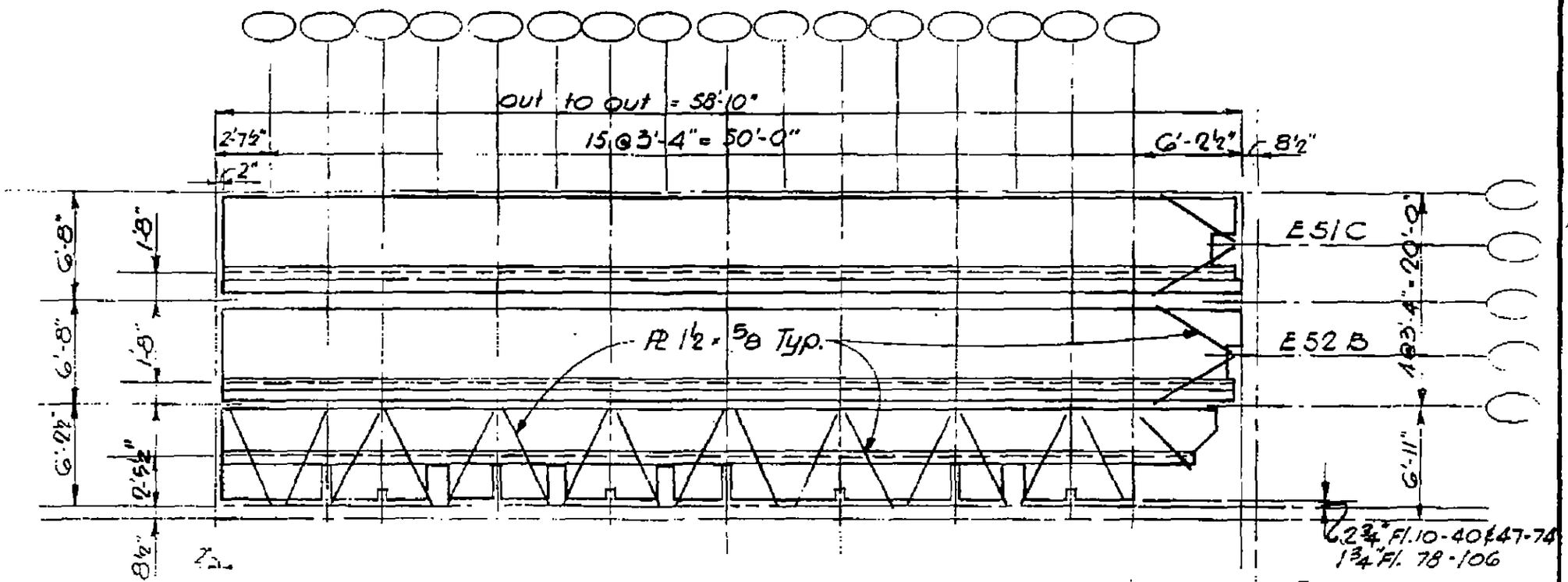

Plan Steel Deck

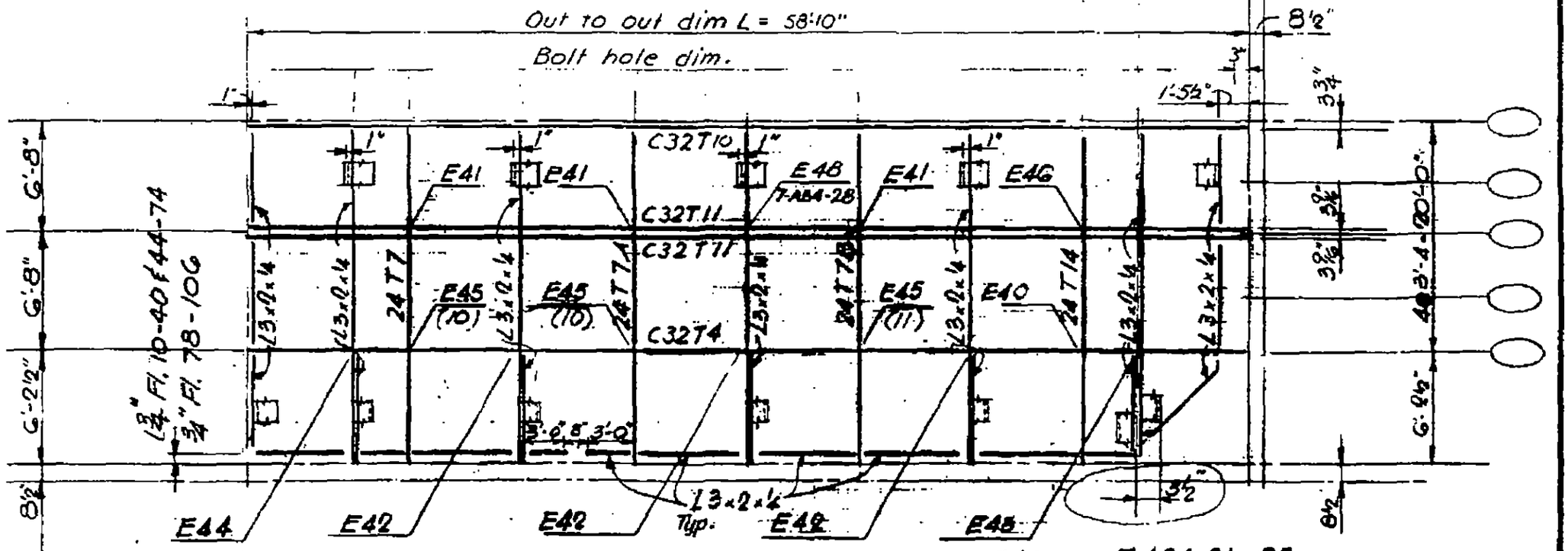

Plan Top Chord

7-AB3-13

35

SKILLING - HELLE - CHRISTIANSEN - ROBERTSON Structural & Civil Engineers

PROJECT THE WORLD TRADE CENTER | TITLE FLOOR PANEL FR1 | DATE 10-20-67

REVISIONS

1-3-68
1-26-68
4-1-68
5-10-68
7-22-68
10-15-68

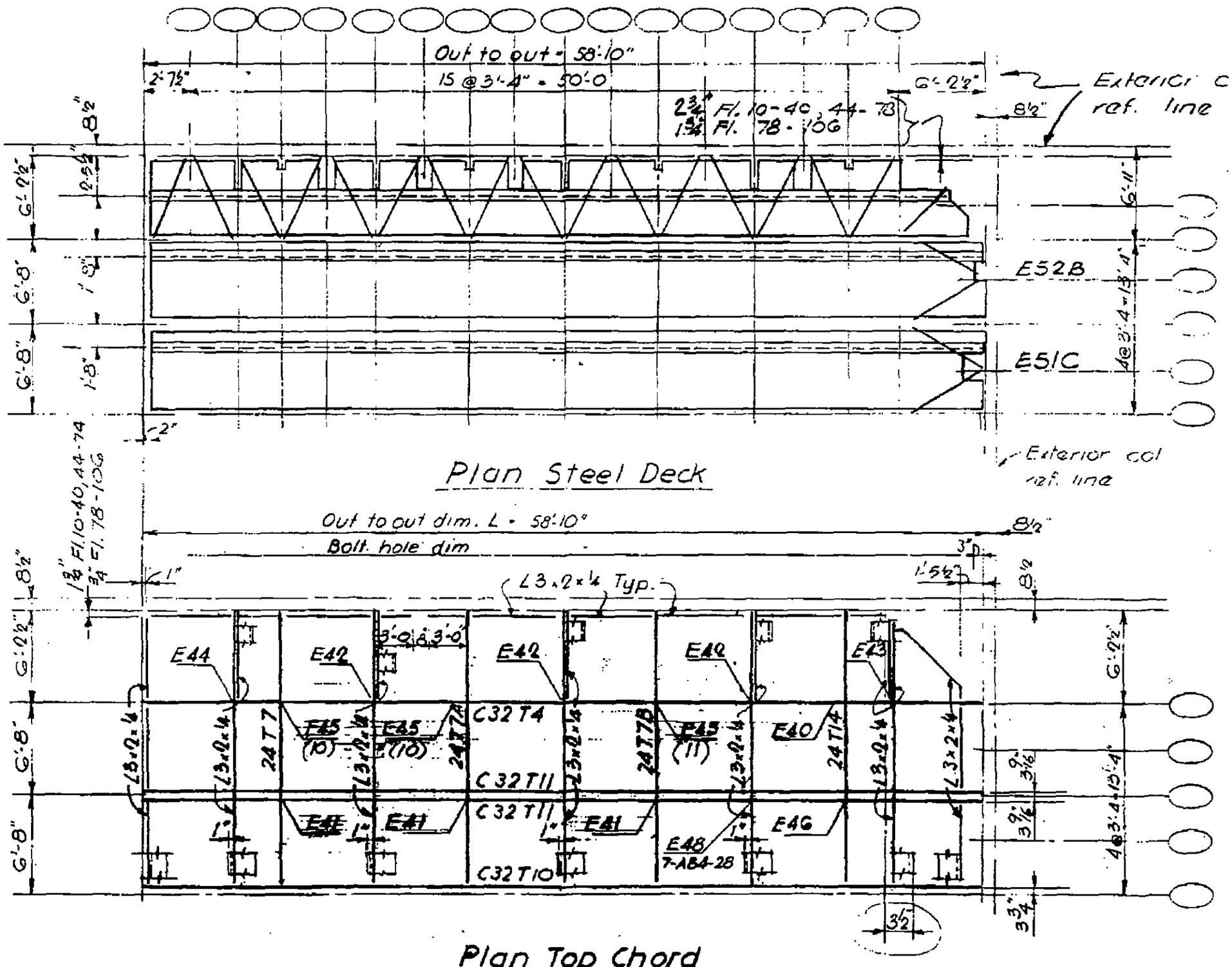

E40-E46 see 7-AB4-21-25

LICENSED PROFESSIONAL ENGINEER LESLIE E. ROBERTSON No. 34360 UNIVERSITY OF THE STATE OF NEW YORK

7-AB3-14

SKILLING - HELLE - CHRISTIANSEN - ROBERTSON Structural & Civil Engineers

PROJECT THE WORLD TRADE CENTER | TITLE FLOOR PANEL 61 | DATE 10-20-67

REVISIONS

1-3-68
1-26-68
4-1-68
5-10-68
7-22-68

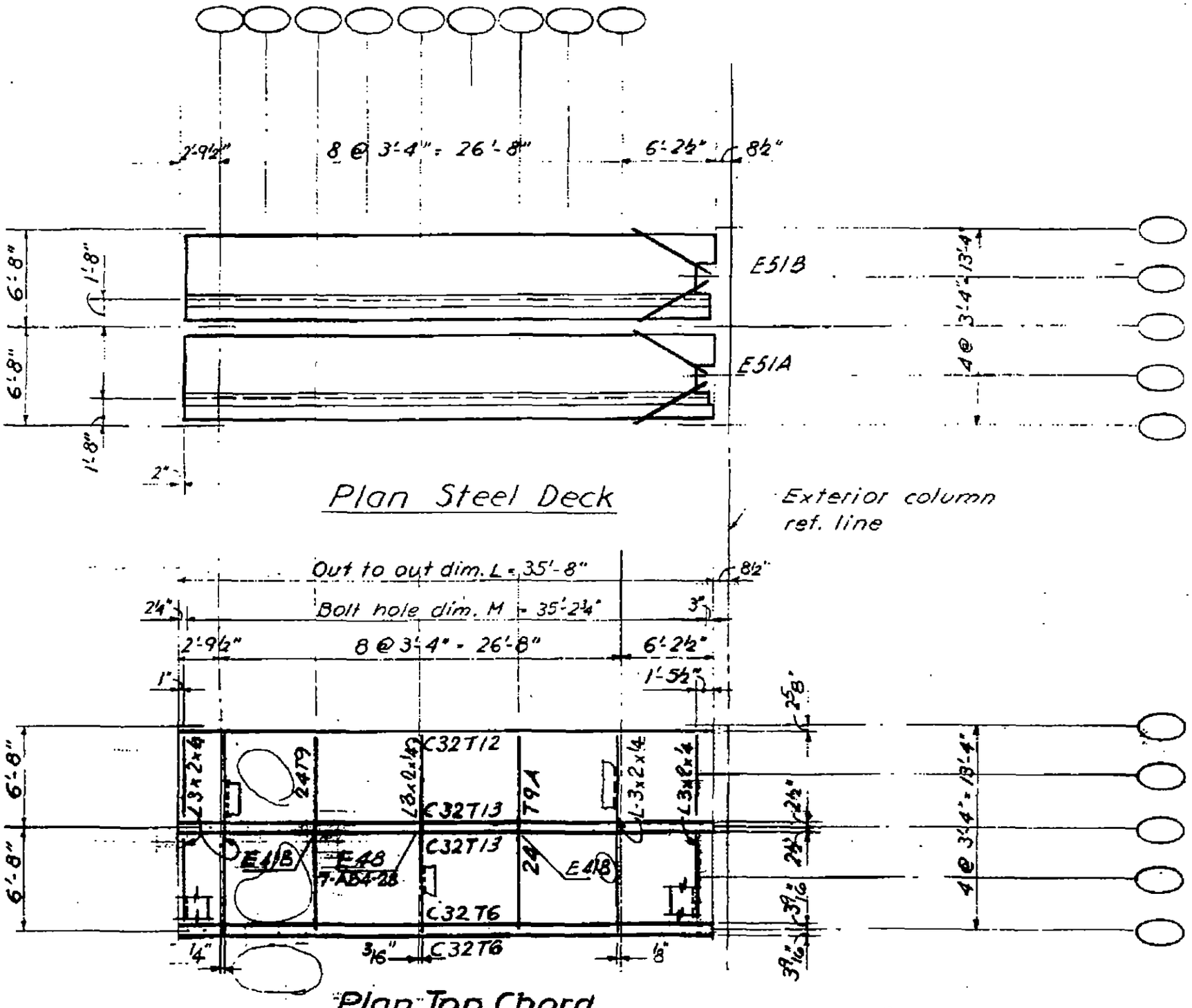

Plan Steel Deck

Plan Top Chord

E41B See 7-AB4-22.1

LICENSED PROFESSIONAL ENGINEER
LESLIE E. ROBERTSON
No. 34360
STATE OF NEW YORK

SKILLING - HELLE - CHRISTIANSEN - ROBERTSON Structural & Civil Engineers

PROJECT THE WORLD TRADE CENTER | TITLE FLOOR PANEL 6R1 | DATE 10-20-67

REVISIONS

1-3-68
1-26-68
4-1-68
5-10-68
7-22-68

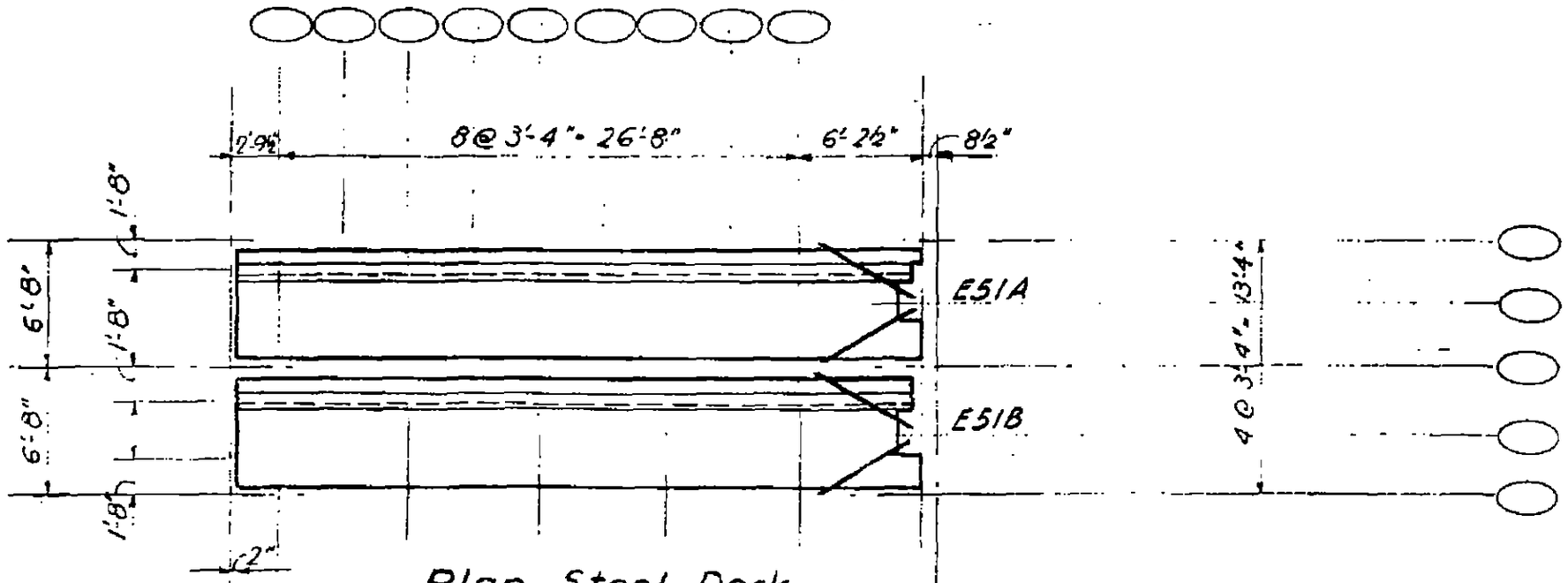

Plan Steel Deck

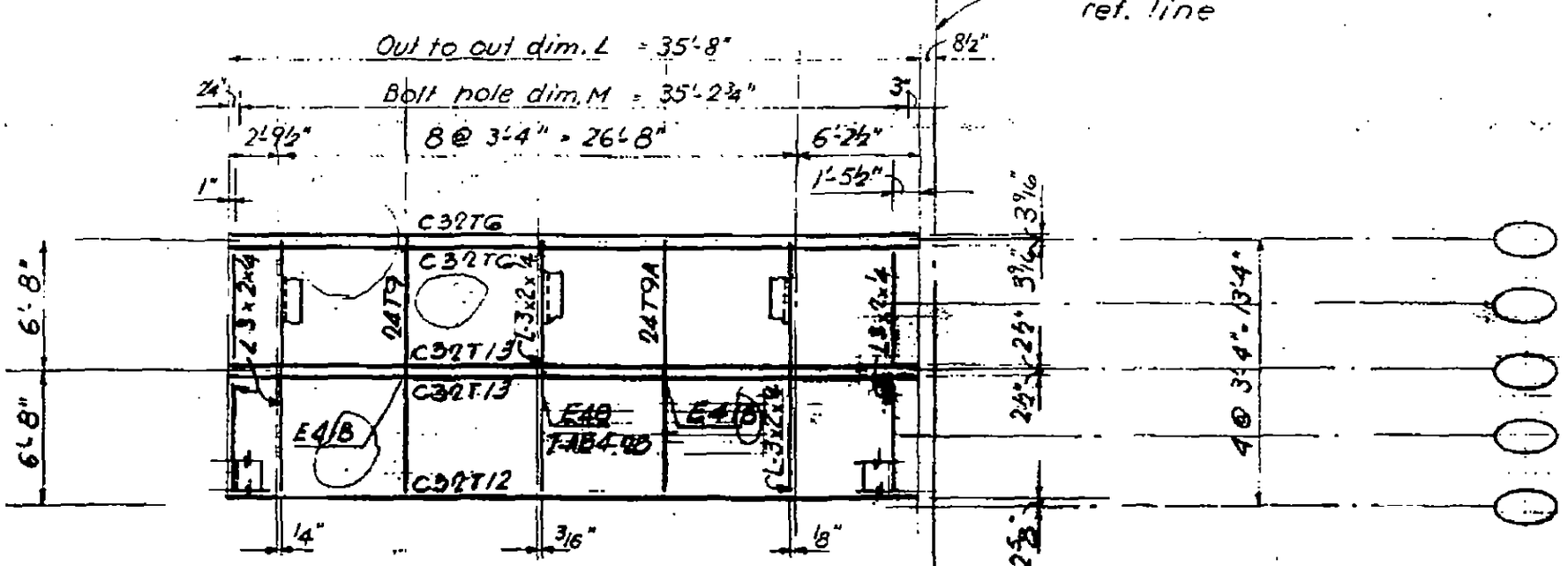

Plan Top Chord

E41B See 7-AB4-22.1

LICENSED PROFESSIONAL ENGINEER
JOHN E. ROBERTSON
No. 34360
STATE OF NEW YORK

SKILLING - HELLE - CHRISTIANSEN - ROBERTSON Structural & Civil Engineers

PROJECT THE WORLD TRADE CENTER | TITLE FLOOR PANEL H1 | DATE 10-20-67

REVISIONS

1-3-68
1-26-68
2-15-68
4-1-68
5-10-68
7-22-68

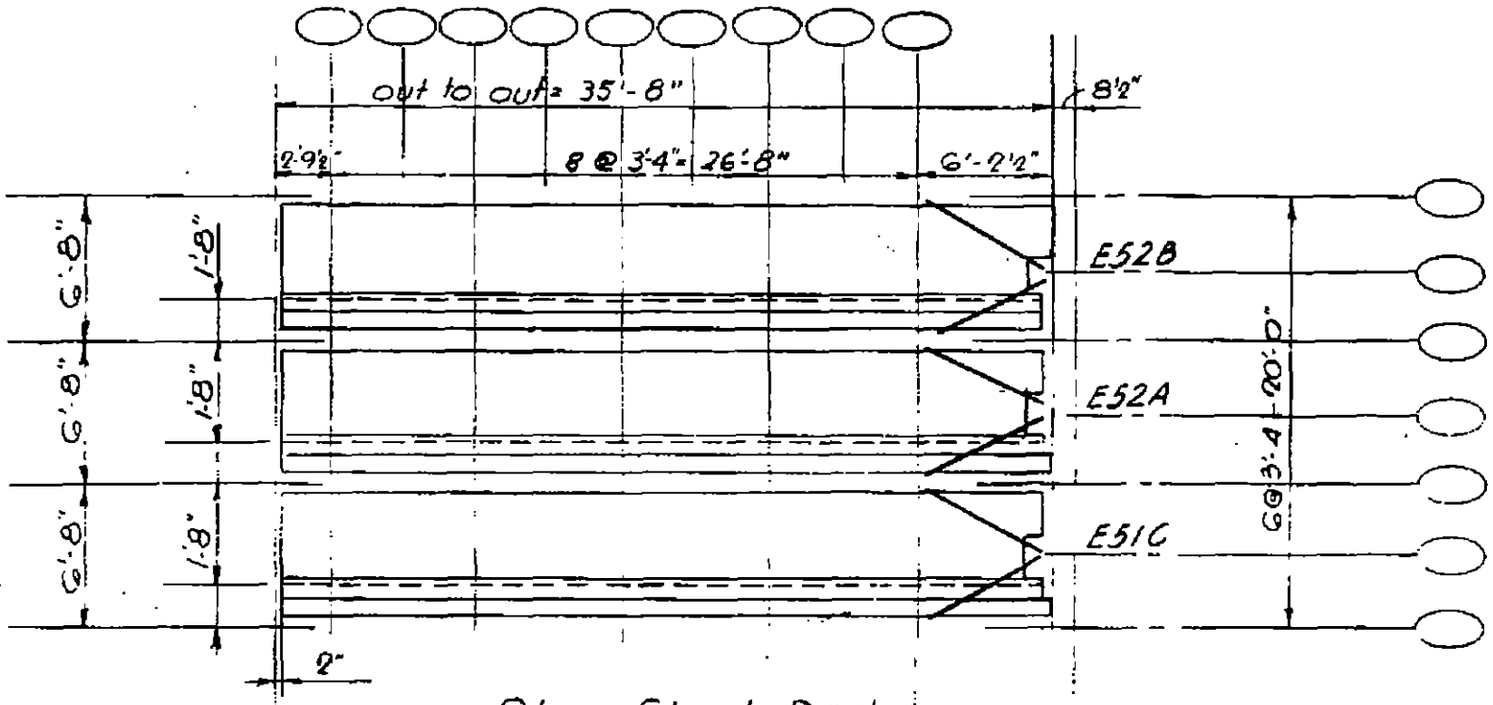

Plan Steel Deck

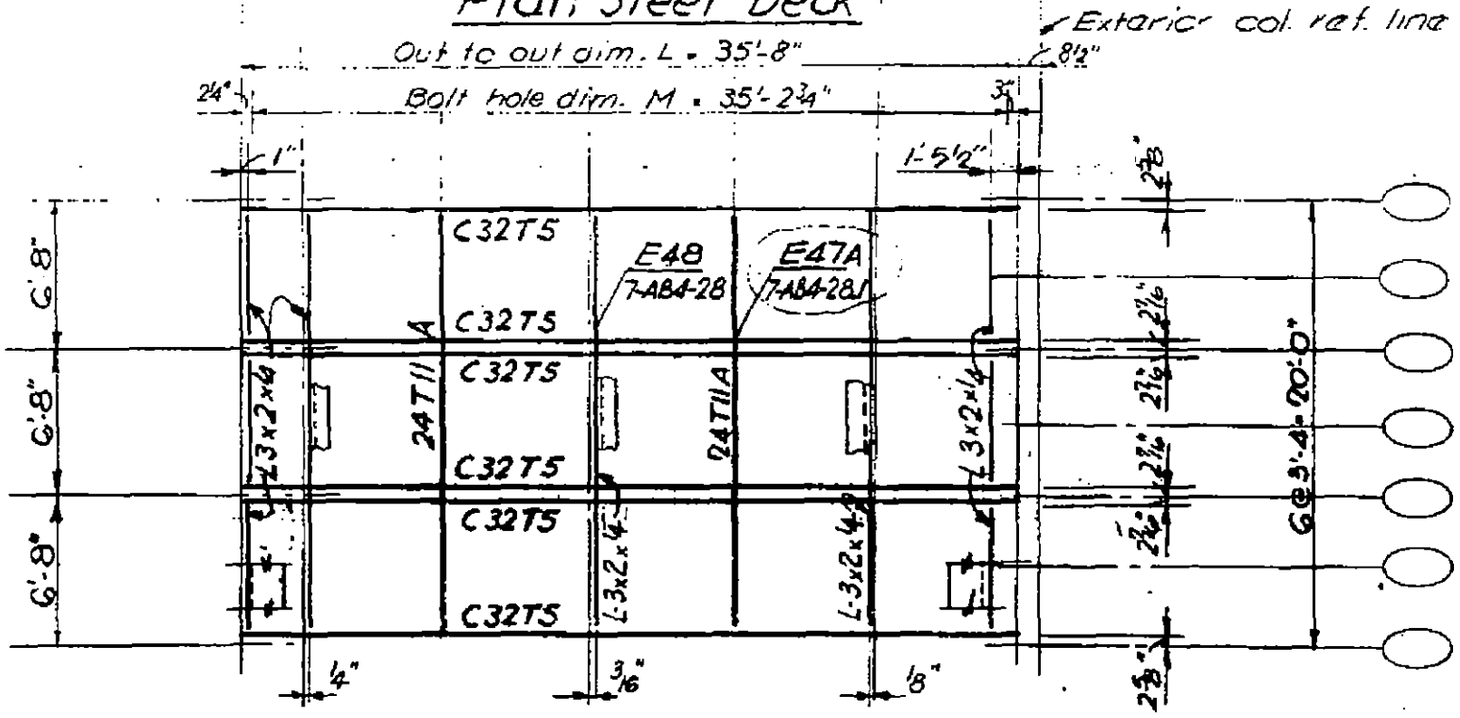

Plan Top Chord

LICENSED PROFESSIONAL ENGINEER
LESLIE E. ROBERTS
No. 34360
STATE OF NEW YORK

7-AB5-1T

SKILLING - HELLE - CHRISTIANSEN - ROBERTSON Structural & Civil Engineers

PROJECT THE WORLD TRADE CENTER | TITLE FLOOR PANEL HRI & HRC | DATE 10-20-67

REVISIONS

1-3-68
1-26-68
2-15-68
4-1-68
5-10-68
7-22-68

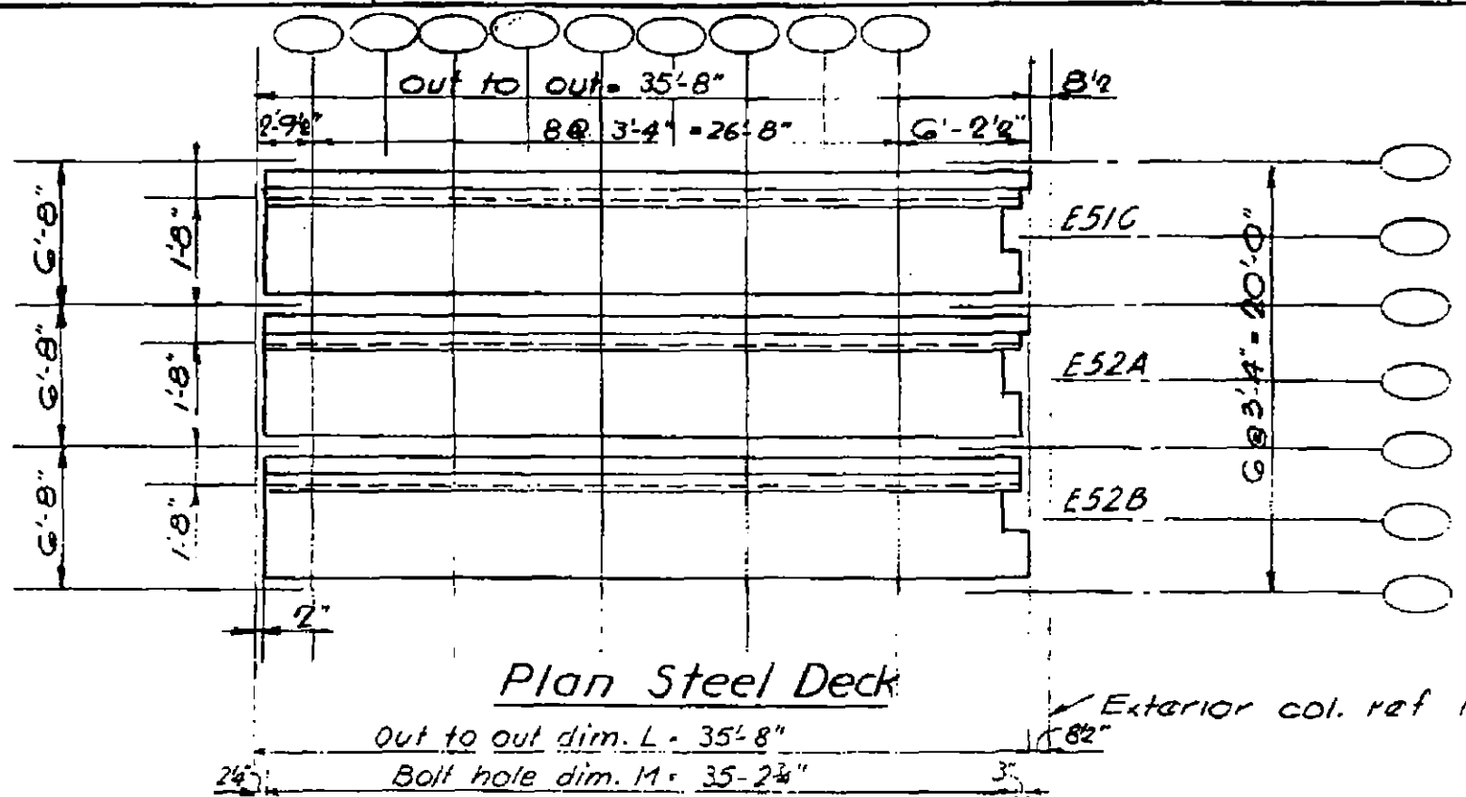

Plan Steel Deck

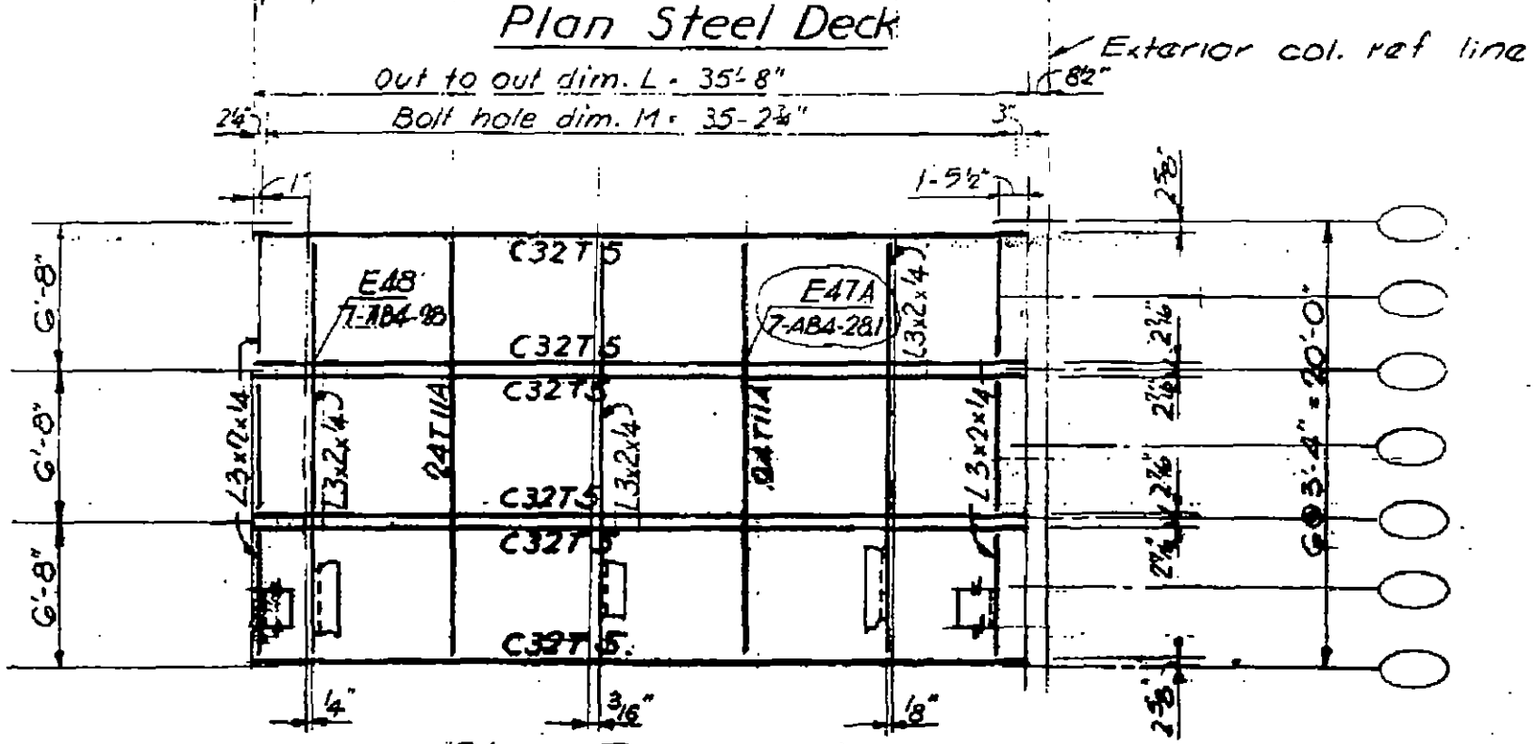

Plan Top Chord

LICENSED PROFESSIONAL ENG. LESLIE E. ROBERTSON No. 34360 UNIVERSITY OF THE STATE OF NEW YORK

7-AB5-18

SKILLING - HELLE - CHRISTIANSEN - ROBERTSON Structural & Civil Engineers

PROJECT THE WORLD TRADE CENTER | TITLE FLOOR PANEL J1 | DATE 10-20-67

REVISIONS

1-3-68
1-26-68
2-15-68
4-1-68
5-10-68
7-22-68

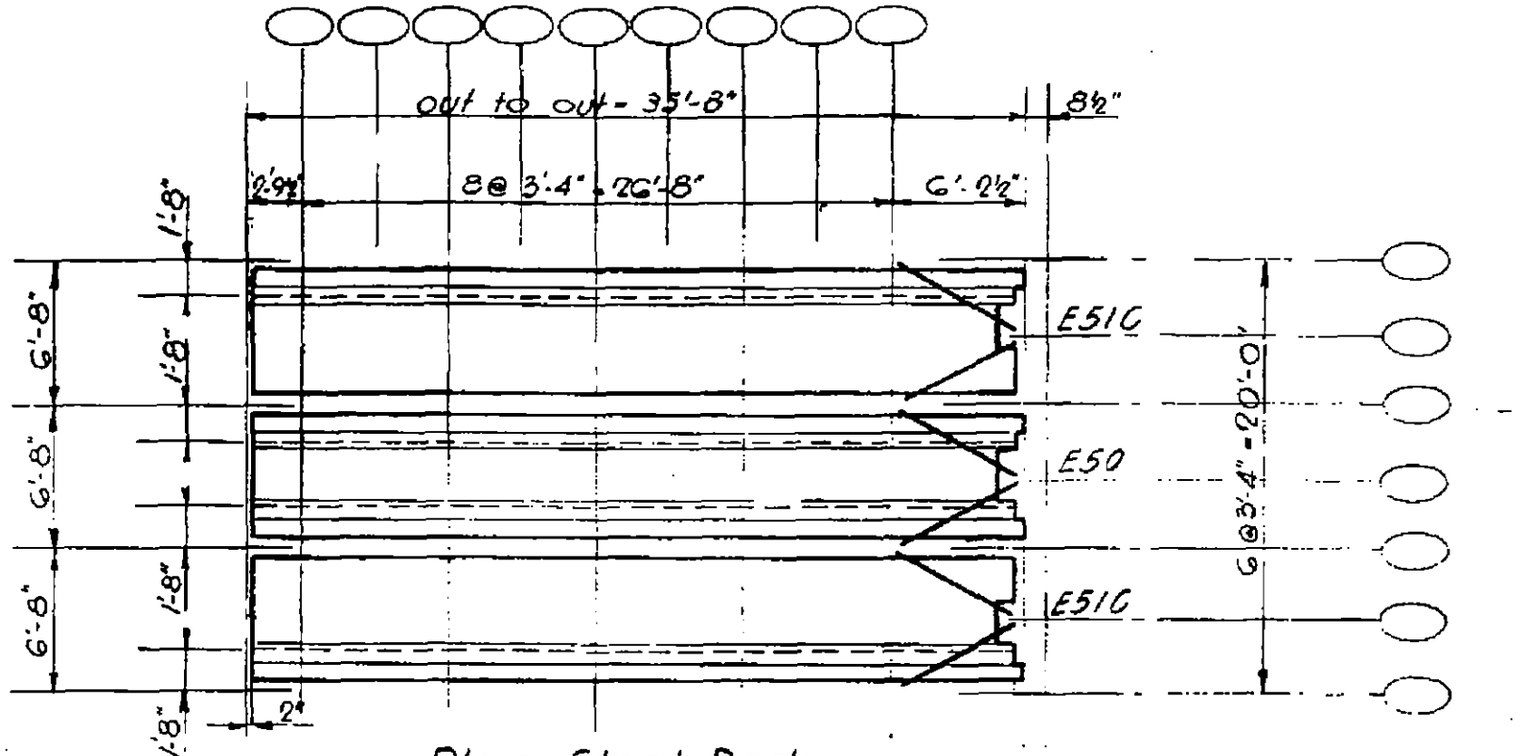

Plan Steel Deck

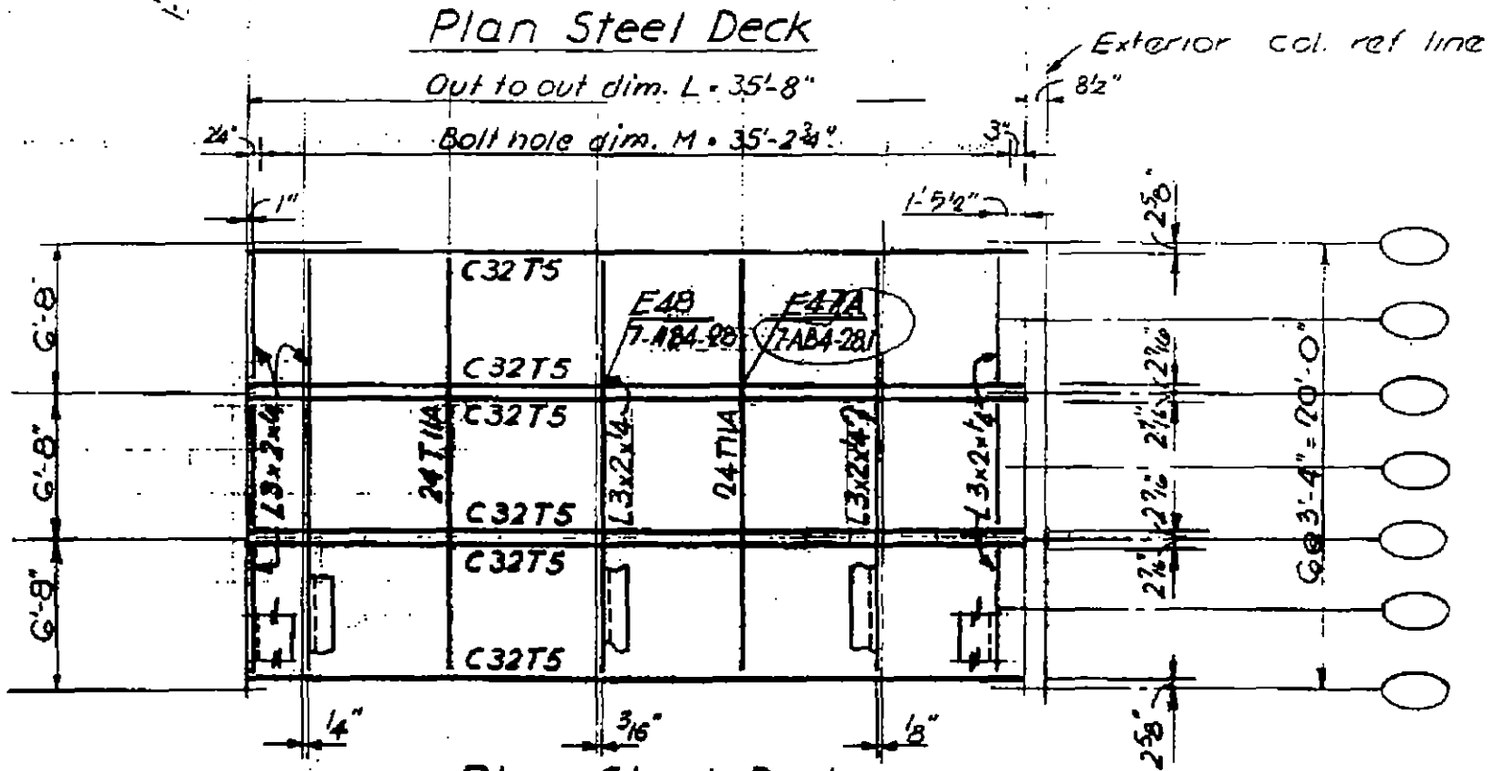

Plan Steel Deck

LESLIE E. ROBERTSON — LICENSED PROFESSIONAL ENGINEER — No. 34360 — UNIVERSITY OF THE STATE OF NEW YORK

7-AB3-18

41

SKILLING - HELLE - CHRISTIANSEN - ROBERTSON Structural & Civil Engineers

PROJECT THE WORLD TRADE CENTER | TITLE FLOOR PANEL K1 | DATE 10-20-67

REVISIONS

1-3-68
1-26-68
2-15-68
4-1-68
5-10-68
7-22-68

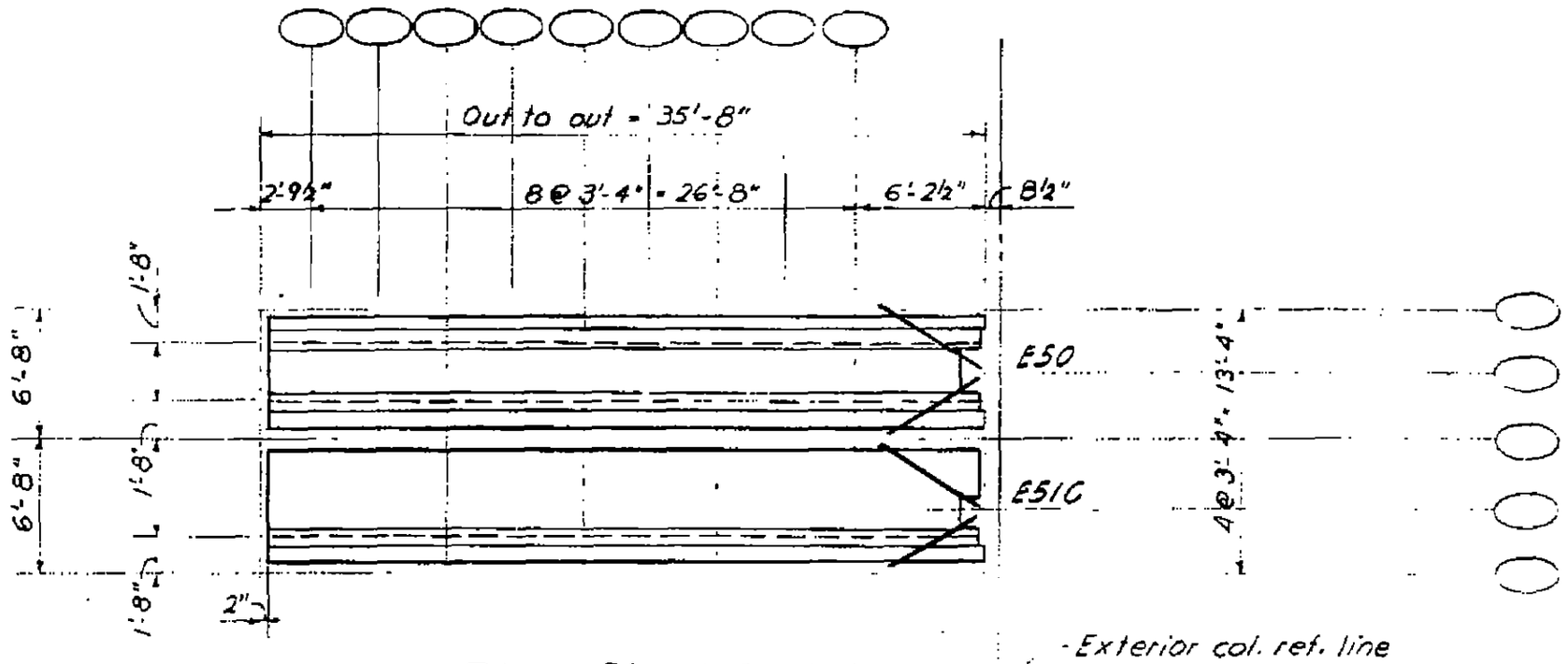

Plan Steel Deck

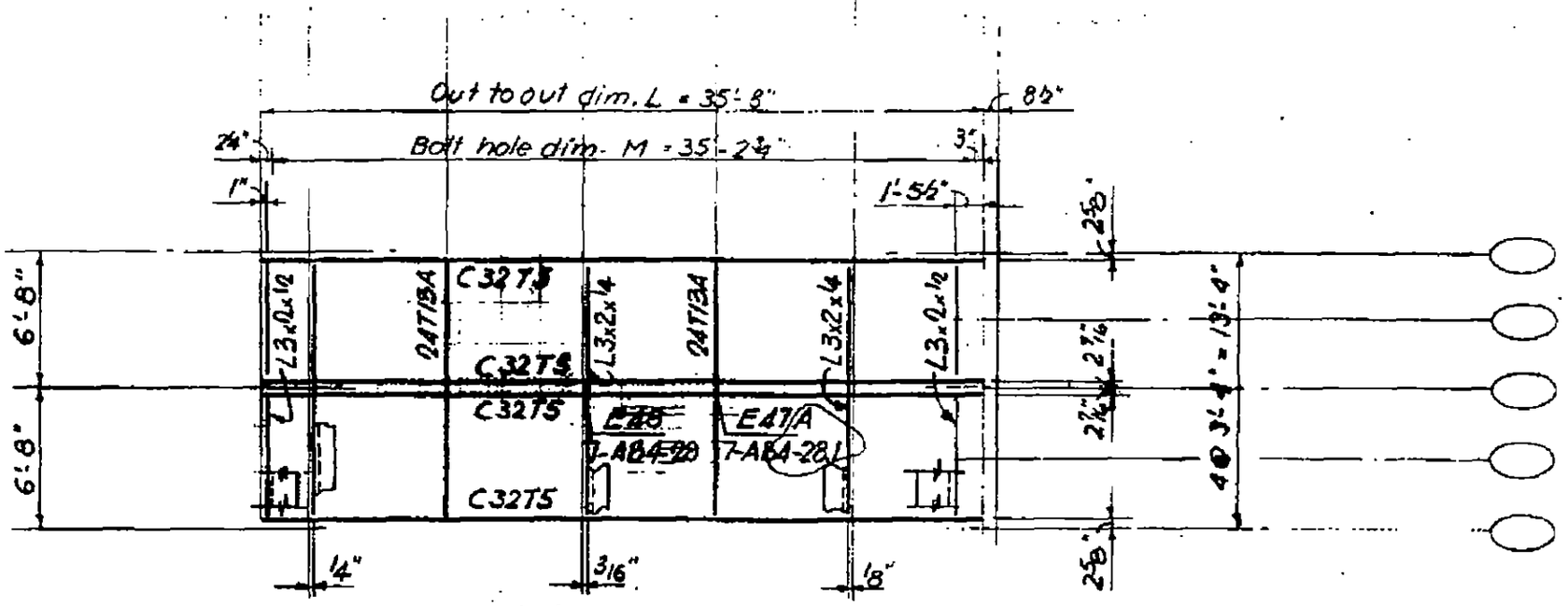

Plan Top Chord

LICENSED PROFESSIONAL ENGINEER LESLIE E. ROBERTSON No. 34360 STATE OF THE STATE OF NEW YORK

7-AB3-20

42

SKILLING - HELLE - CHRISTIANSEN - ROBERTSON Structural & Civil Engineers

PROJECT THE WORLD TRADE CENTER | TITLE FLOOR PANEL K R I | DATE 10-20-67

REVISIONS

1-3-68
1-26-68
2-15-68
4-1-68
5-10-68
7-22-68

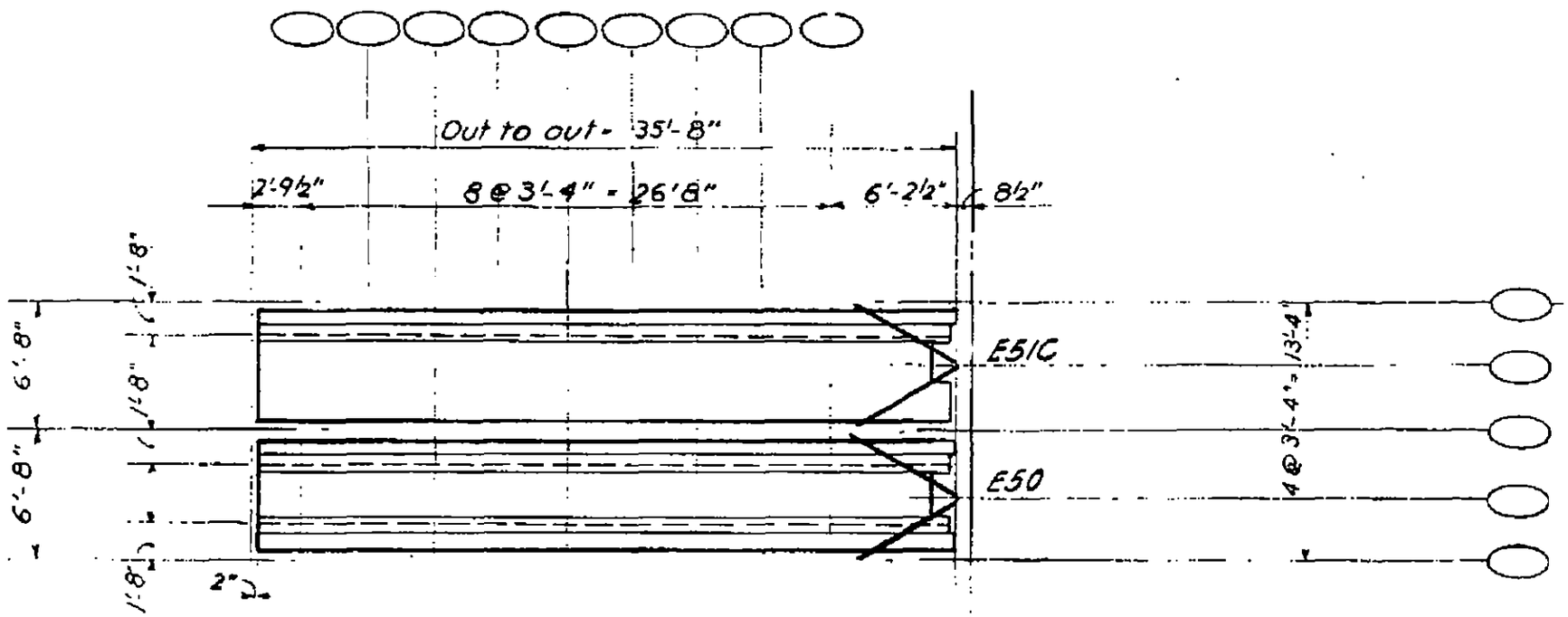

Plan Steel Deck

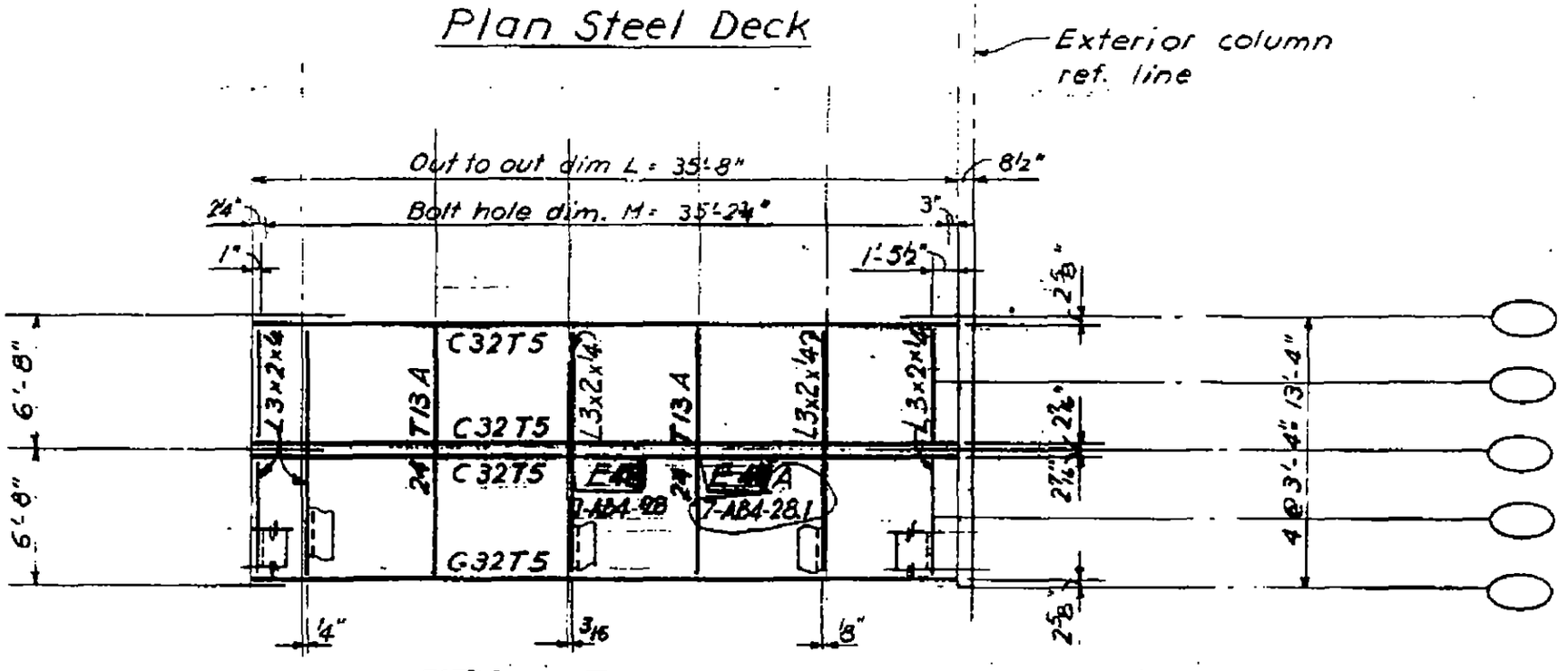

Plan Top Chord

LICENSED PROFESSIONAL ENGINEER LESLIE E. ROBERTSON No. 34360 REGISTERED TO THE STATE OF NEW YORK

43

7-AB3-21

SKILLING - HELLE - CHRISTIANSEN - ROBERTSON Structural & Civil Engineers

PROJECT THE WORLD TRADE CENTER | TITLE FLOOR PANEL M1 | DATE 10-20-67

REVISIONS

1-3-68
1-26-68
2-15-68
4-1-68
5-10-68
7-22-68

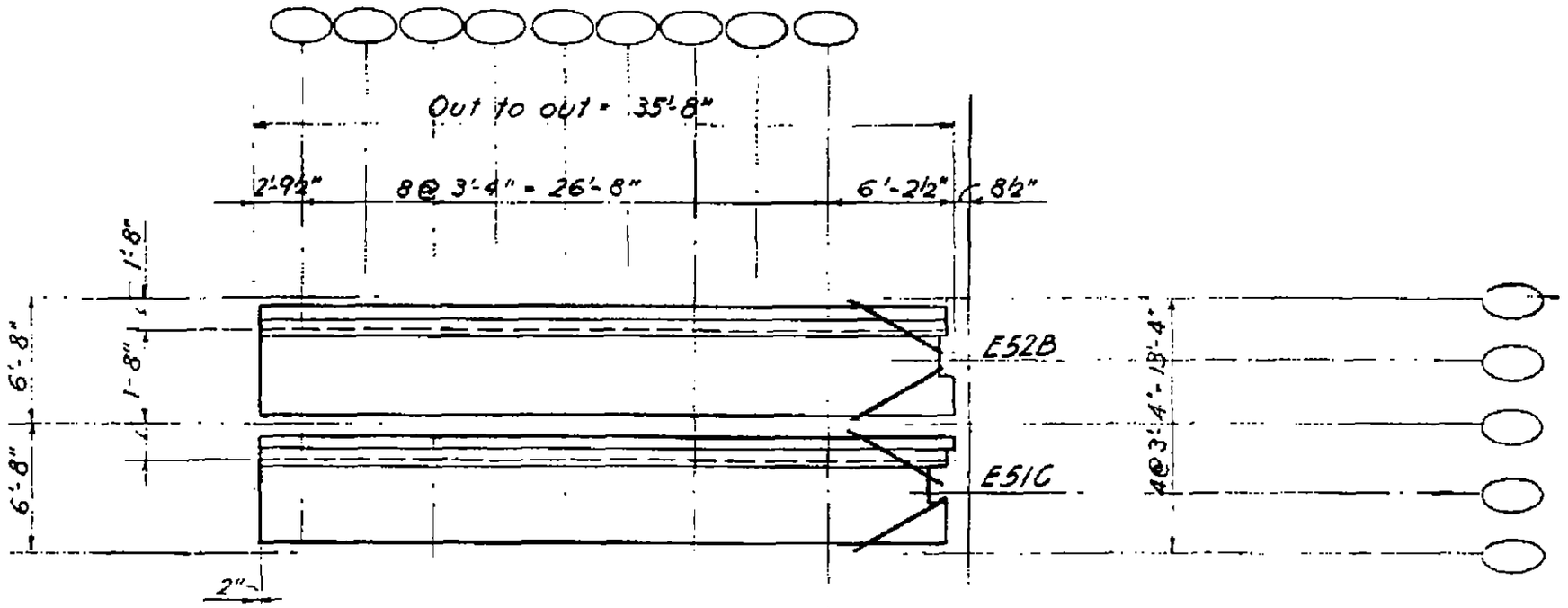

Plan Steel Deck

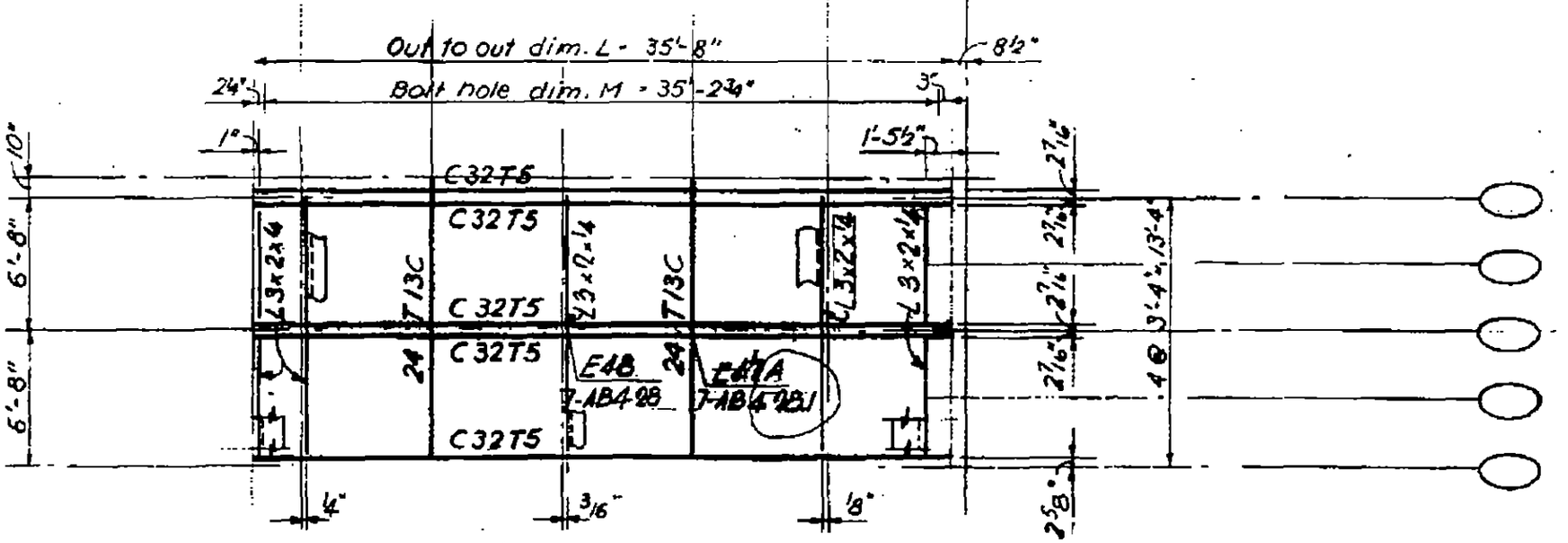

Plan Top Chord

LICENSED PROFESSIONAL ENGINEER
LESLIE E. ROBERTSON
No. 34360
UNIVERSITY OF THE STATE OF NEW YORK

7-AB3-22

SKILLING - HELLE - CHRISTIANSEN - ROBERTSON Structural & Civil Engineers

PROJECT THE WORLD TRADE CENTER | TITLE FLOOR PANEL MR1 | DATE 10-20-67

REVISIONS

1-3-68
1-26-68
2-15-68
4-1-68
5-10-68
7-22-68

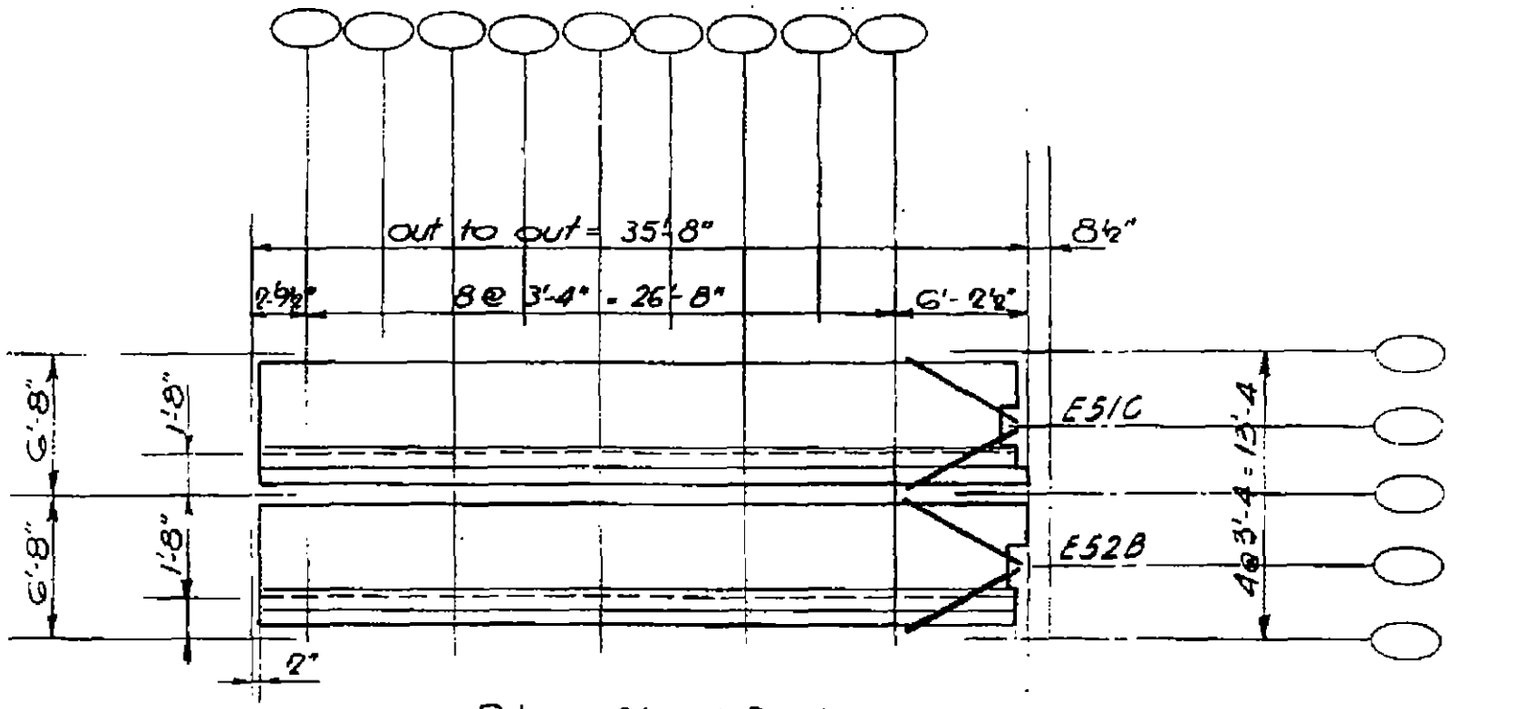

Plan Steel Deck

Exterior col ref line

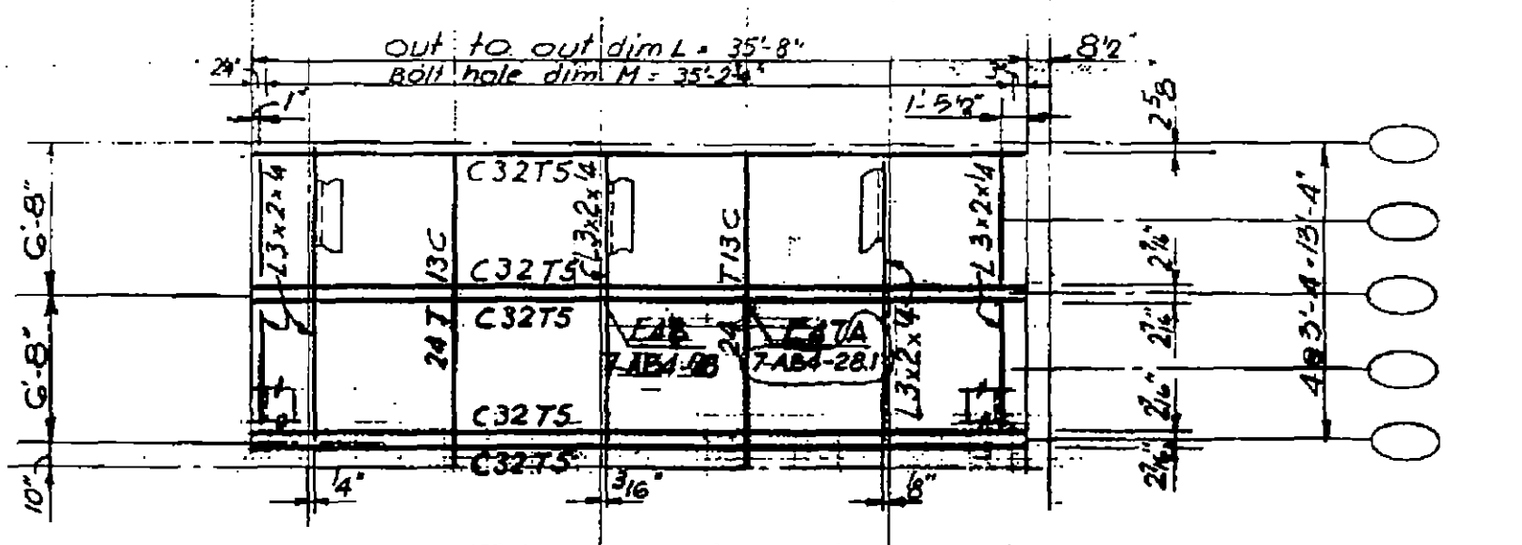

Plan Top Chord

LICENSED PROFESSIONAL ENGINEER
LESLIE E. ROBERTSON
No. 14...0
REGISTERED IN THE STATE OF NEW YORK

T-AB3-2

SKILLING - HELLE - CHRISTIANSEN - ROBERTSON Structural & Civil Engineers

PROJECT THE WORLD TRADE CENTER | TITLE FLOOR PANEL - DIMENSION SCHEDULE 2 | DATE 8-15-68

REVISIONS

PANEL NO.									OUT TO OUT PANEL DIM. L	BOLT HOLE DIMENSION M	DIMENSION A
A1A	B1A	BR1A	C1A	CR1A	D1A	DR1A	E1A	ER1A	59' – 9"	59' – 3¾"	5' – 2½"
A1B	B1B	BR1B	C1B	CR1B	D1B	DR1B	E1B	ER1B	59' – 8½"	59' – 3¼"	5' – 2"
A1C	B1C	BR1C	C1C	CR1C	D1C	DR1C	E1C	ER1C	59' – 8"	59' – 2¾"	5' – 1½"
A1D	B1D	BR1D	C1D	CR1D	D1D	DR1D	E1D	ER1D	59' – 5"	58' – 11¾"	4' – 10½"
A1E	B1E	BR1E	C1E	CR1E	D1E	DR1E	E1E	ER1E	59' – 3"	58' – 9¾"	4' – 8½"
A1F	B1F	BR1F	C1F	CR1F	D1F	DR1F	E1F	ER1F	59' – 2"	58' – 8¾"	4' – 7½"
A1G	B1G	BR1G	C1G	CR1G	D1G	DR1G	E1G	ER1G	58' – 11"	58' – 5¾"	4' – 4½"
A1H	B1H	BR1H	C1H	CR1H	D1H	DR1H	E1H	ER1H	58' – 8"	58' – 2¾"	4' – 1½"
A1J	B1J	BR1J	C1J	CR1J	D1J	DR1J	E1J	ER1J	58' – 7"	58' – 1¾"	4' – 0½"
A1K	B1K	BR1K	C1K	CR1K	D1K	DR1K	E1K	ER1K	58' – 6"	58' – 0¾"	3' – 11½"
A1M	B1M	BR1M	C1M	CR1M	D1M	DR1M	E1M	ER1M	58' – 3"	57' – 9¾"	3' – 8½"
A1N	B1N	BR1N	C1N	CR1N	D1N	DR1N	E1N	ER1N	57' – 9"	57' – 3¾"	3' – 2½"
A1P	B1P	BR1P	C1P	CR1P	D1P	DR1P	E1P	ER1P	57' – 7"	57' – 1¾"	3' – 0½"

LICENSED PROFESSIONAL ENGINEER
LESLIE E. ROBERTSON
No. 34360
STATE OF NEW YORK

7-AB3-24

SKILLING - HELLE - CHRISTIANSEN - ROBERTSON Structural & Civil Engineers

PROJECT THE WORLD TRADE CENTER | TITLE FLOOR PANEL A2 | DATE 8-1-68

REVISIONS

10-4-68

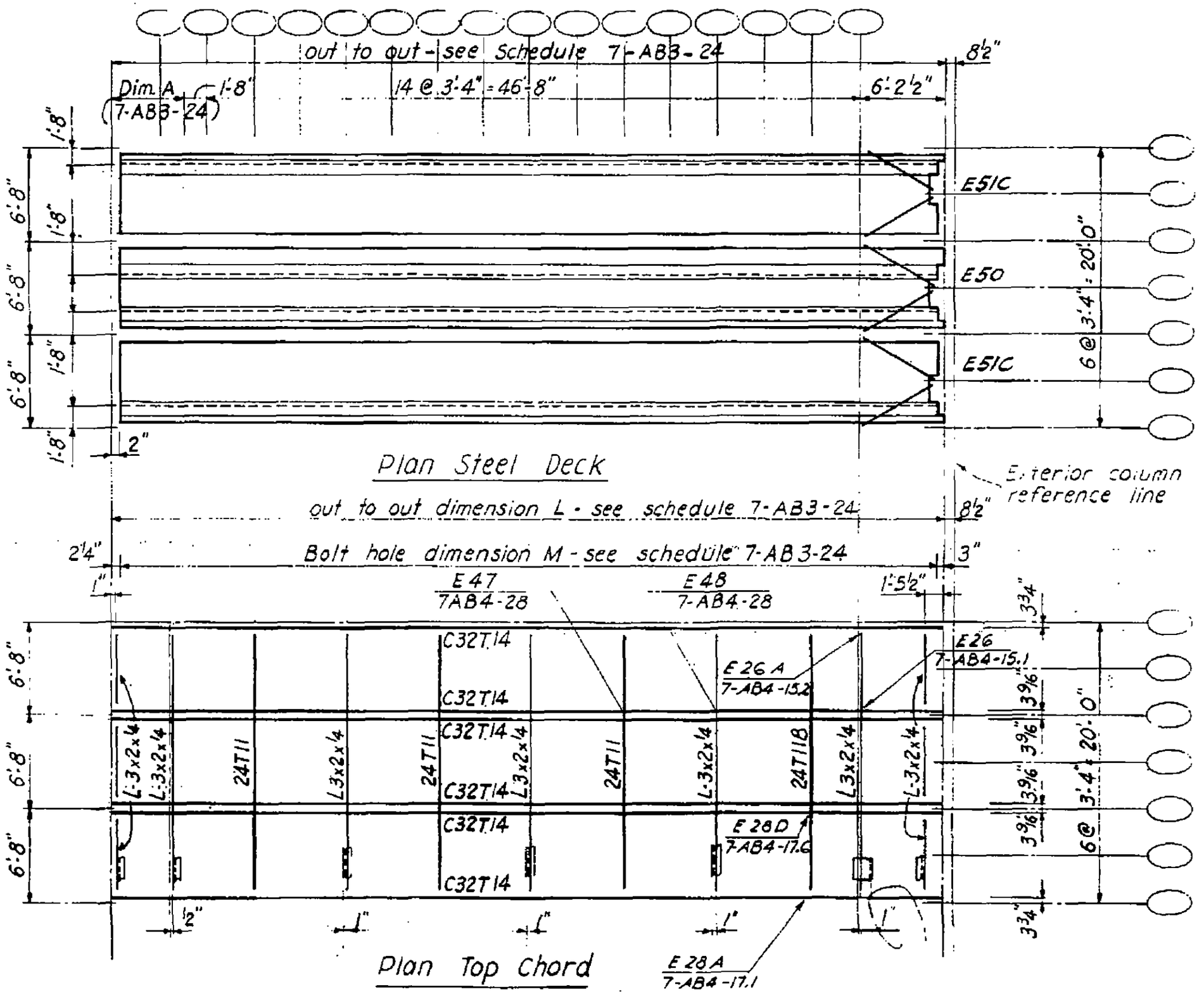

LICENSED PROFESSIONAL ENGINEER
LESLIE E. ROBERTSON
No.
STATE OF WYOMING

7-AB3-25

SKILLING - HELLE - CHRISTIANSEN - ROBERTSON Structural & Civil Engineers

PROJECT THE WORLD TRADE CENTER | TITLE FLOOR PANEL B2 & B7 | DATE 8-1-68

REVISIONS

10-4-68

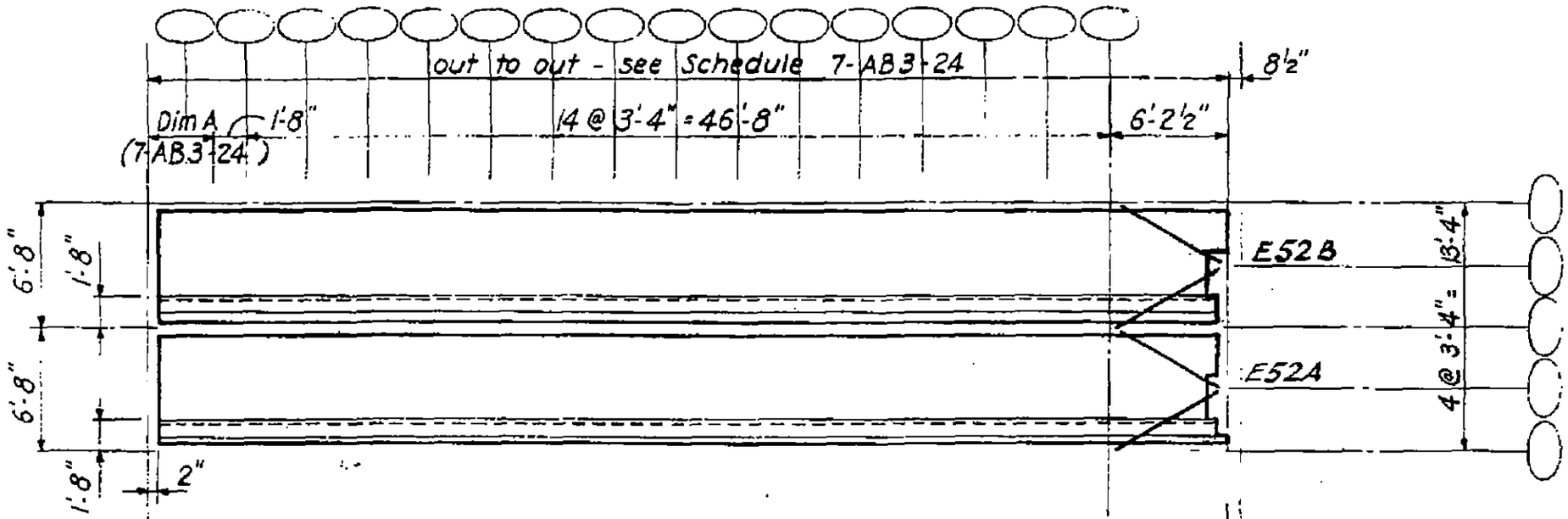

Plan Steel Deck

Exterior column reference line

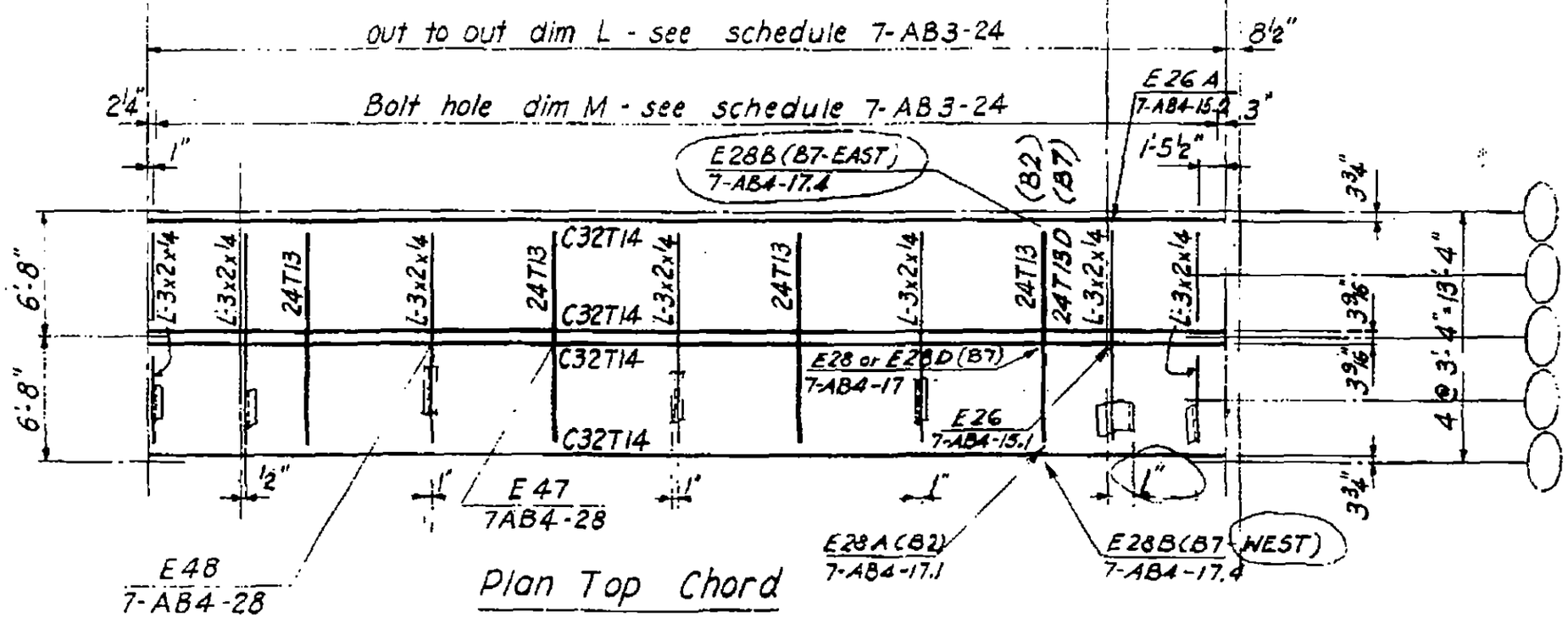

Plan Top Chord

LICENSED PROFESSIONAL ENGINEER
LESLIE E. ROBERTSON
No. 34360
UNIVERSITY OF THE STATE OF NEW YORK

7-AB3-26

SKILLING - HELLE - CHRISTIANSEN - ROBERTSON Structural & Civil Engineers

PROJECT THE WORLD TRADE CENTER | TITLE FLOOR PANEL BR 2 & BR7 | DATE 8-1-68

REVISIONS

10-4-68

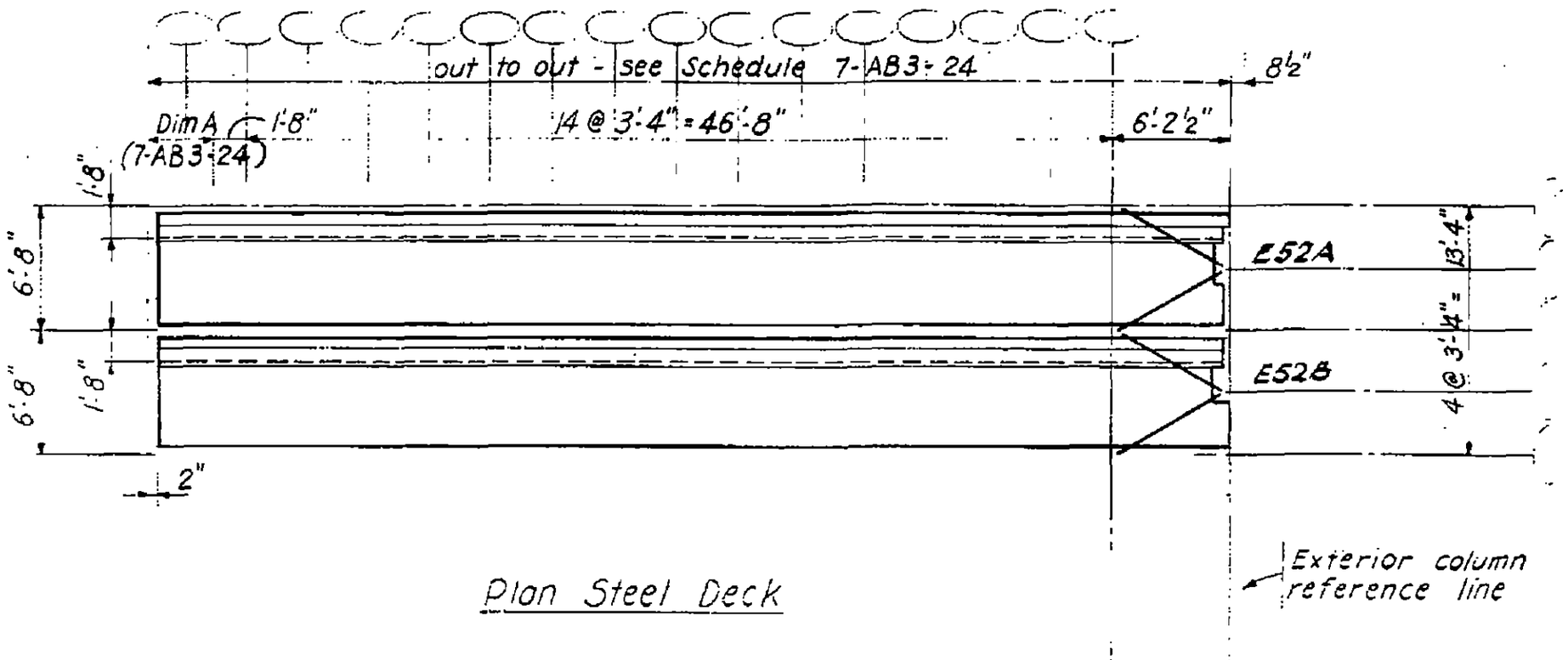

Plan Steel Deck

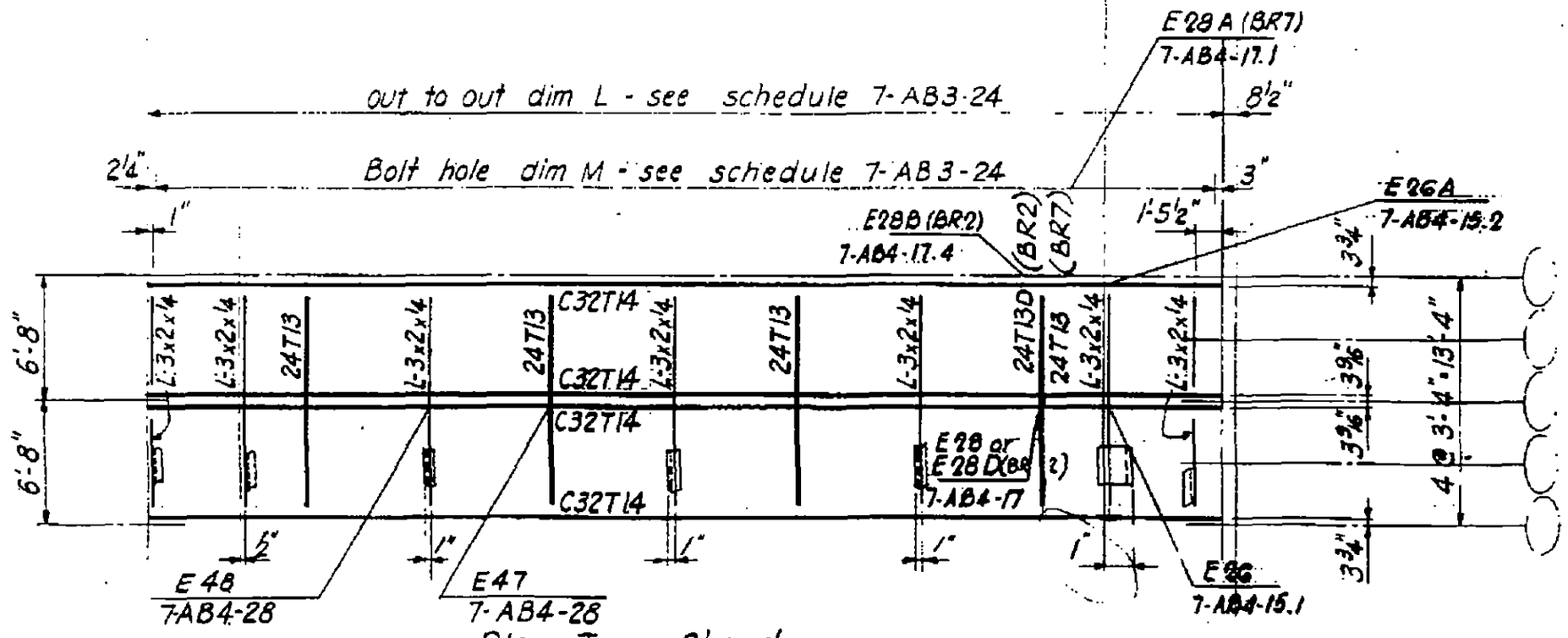

Plan Top Chord

7-AB3-27

LICENSED PROFESSIONAL ENGINEER
LESLIE E ROBERTSON
No. 34360
UNIVERSITY OF THE STATE OF NEW YORK

SKILLING - HELLE - CHRISTIANSEN - ROBERTSON Structural & Civil Engineers

PROJECT THE WORLD TRADE CENTER | TITLE FLOOR PANEL C2 | DATE 8-1-68

REVISIONS

10-4-68

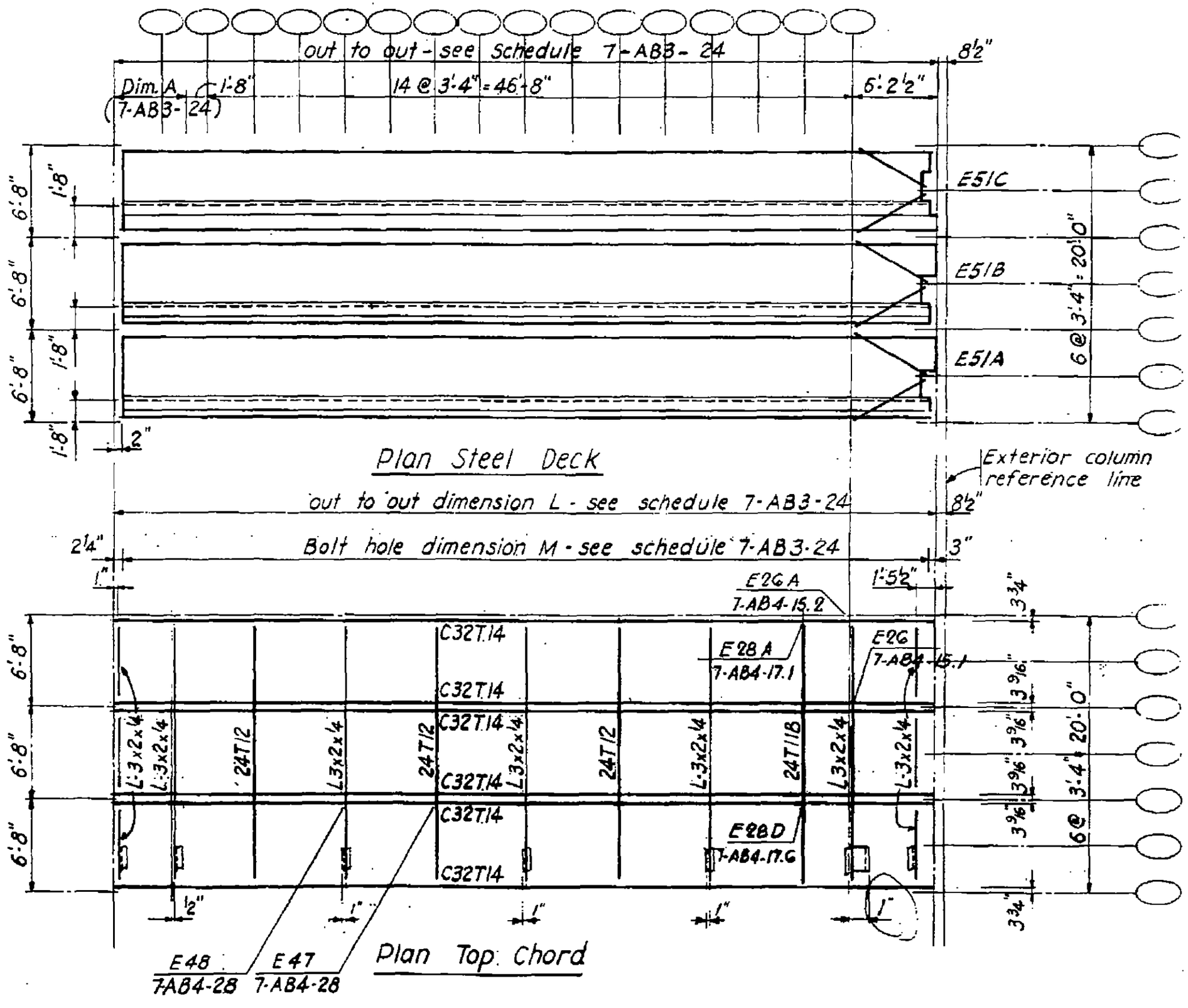

7-AB3-28

SKILLING - HELLE - CHRISTIANSEN - ROBERTSON Structural & Civil Engineers

PROJECT THE WORLD TRADE CENTER | TITLE FLOOR PANEL CR-2 | DATE 8-1-68

REVISIONS

10-4-68

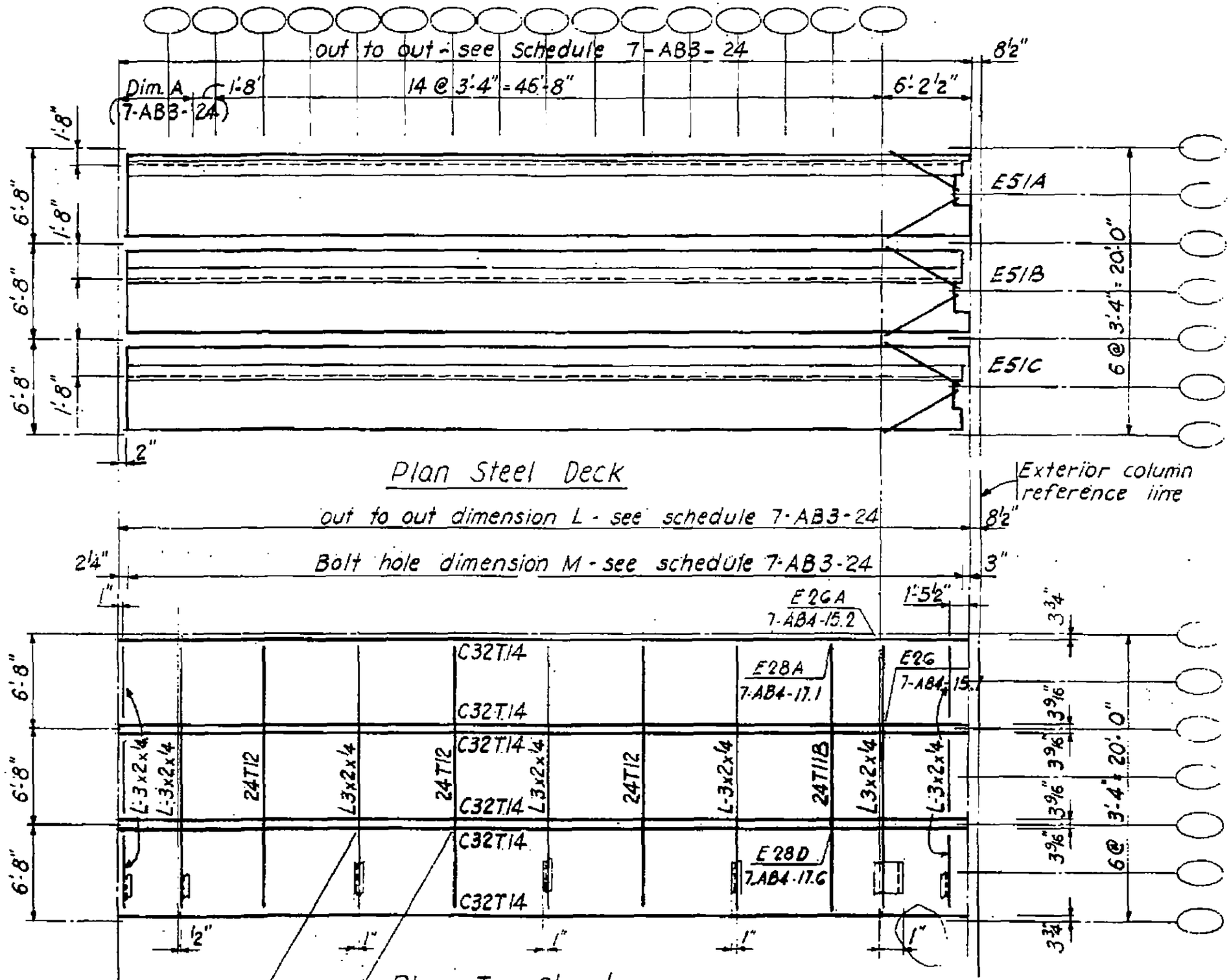

LOUIS E. ROBERTSON No. 34360 REGISTERED PROFESSIONAL ENGINEER THE STATE OF NEW YORK

7-AB3-29

SKILLING - HELLE - CHRISTIANSEN - ROBERTSON Structural & Civil Engineers

PROJECT THE WORLD TRADE CENTER | TITLE FLOOR PANEL D2 & D7 | DATE 8-15-68

REVISIONS

10-4-68

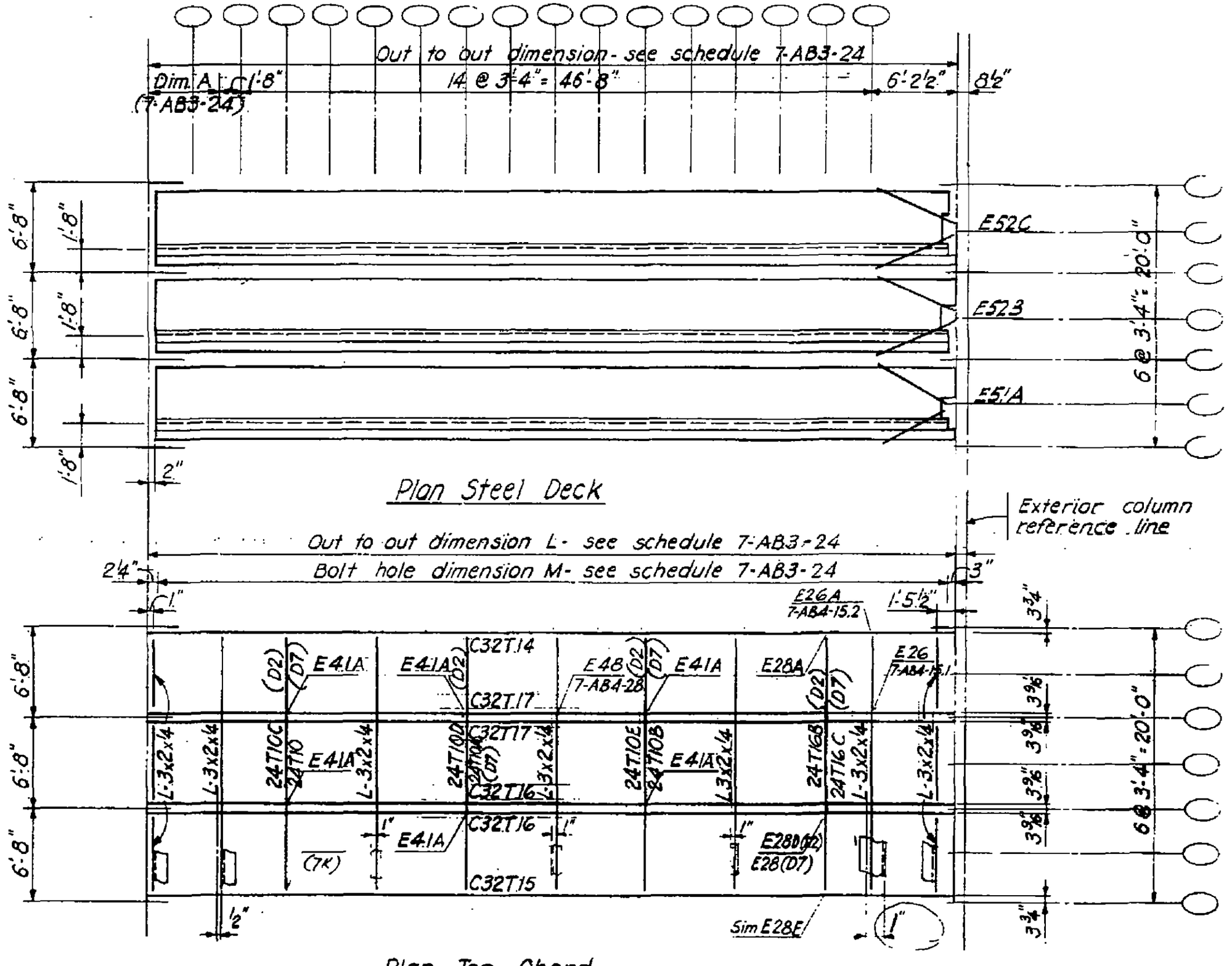

E28-E28E See 7-AB4-17
E41A see 7-AB4-22

7-AB3-30

LICENSED PROFESSIONAL ENGINEER — LESLIE E. ROBERTSON — No. 34360 — STATE OF NEW YORK

SKILLING - HELLE - CHRISTIANSEN - ROBERTSON Structural & Civil Engineers

PROJECT THE WORLD TRADE CENTER | TITLE FLOOR PANEL DR2 & DR7 | DATE 8-15-68

REVISIONS

10-4-68

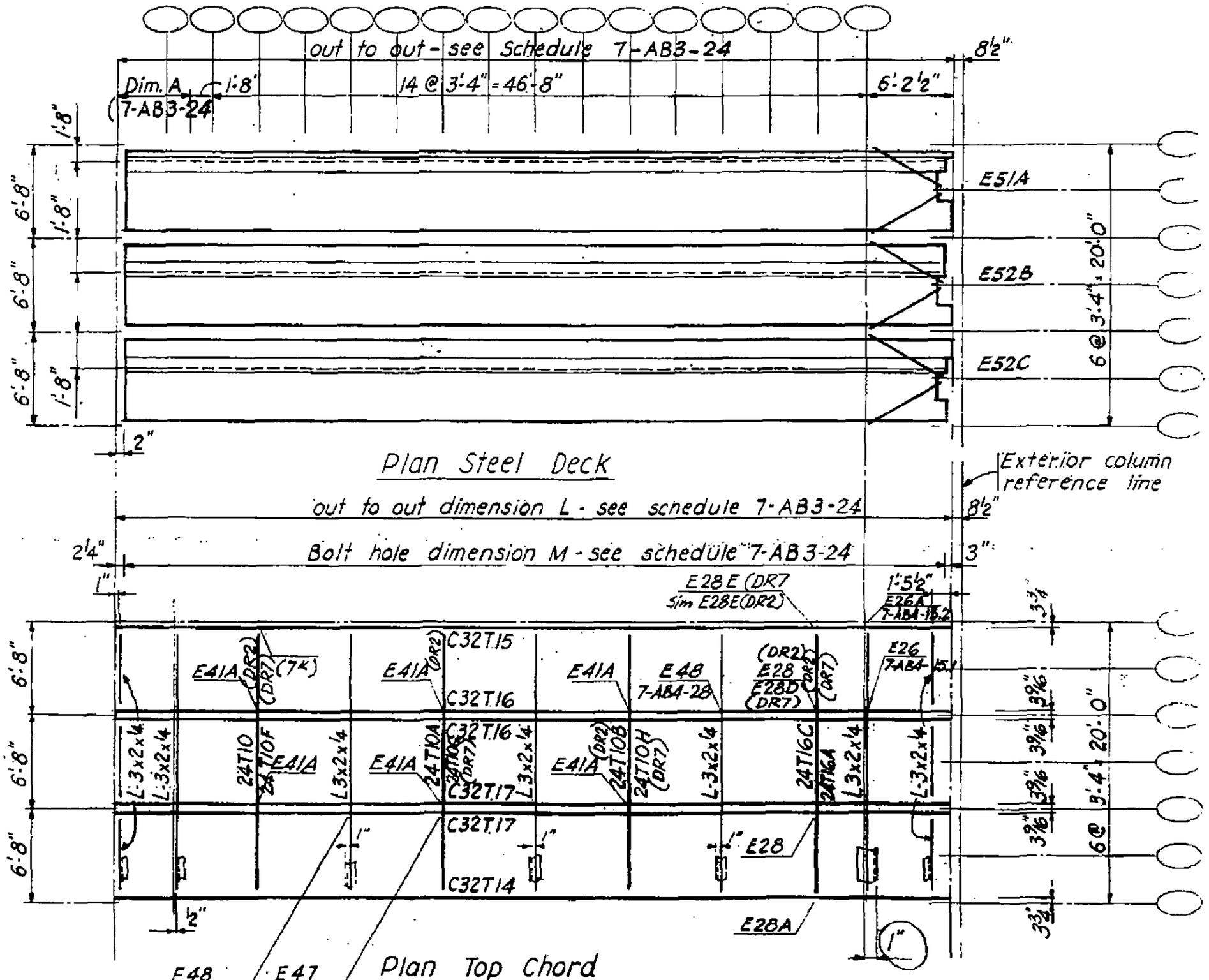

LICENSED PROFESSIONAL ENGINEER
LESLIE E. ROBERTSON
No. 34360
UNIVERSITY OF THE STATE OF NEW YORK

7-AB3-31

SKILLING - HELLE - CHRISTIANSEN - ROBERTSON Structural & Civil Engineers

PROJECT THE WORLD TRADE CENTER | TITLE FLOOR PANEL E2 | DATE 8-15-68

REVISIONS

10-4-68

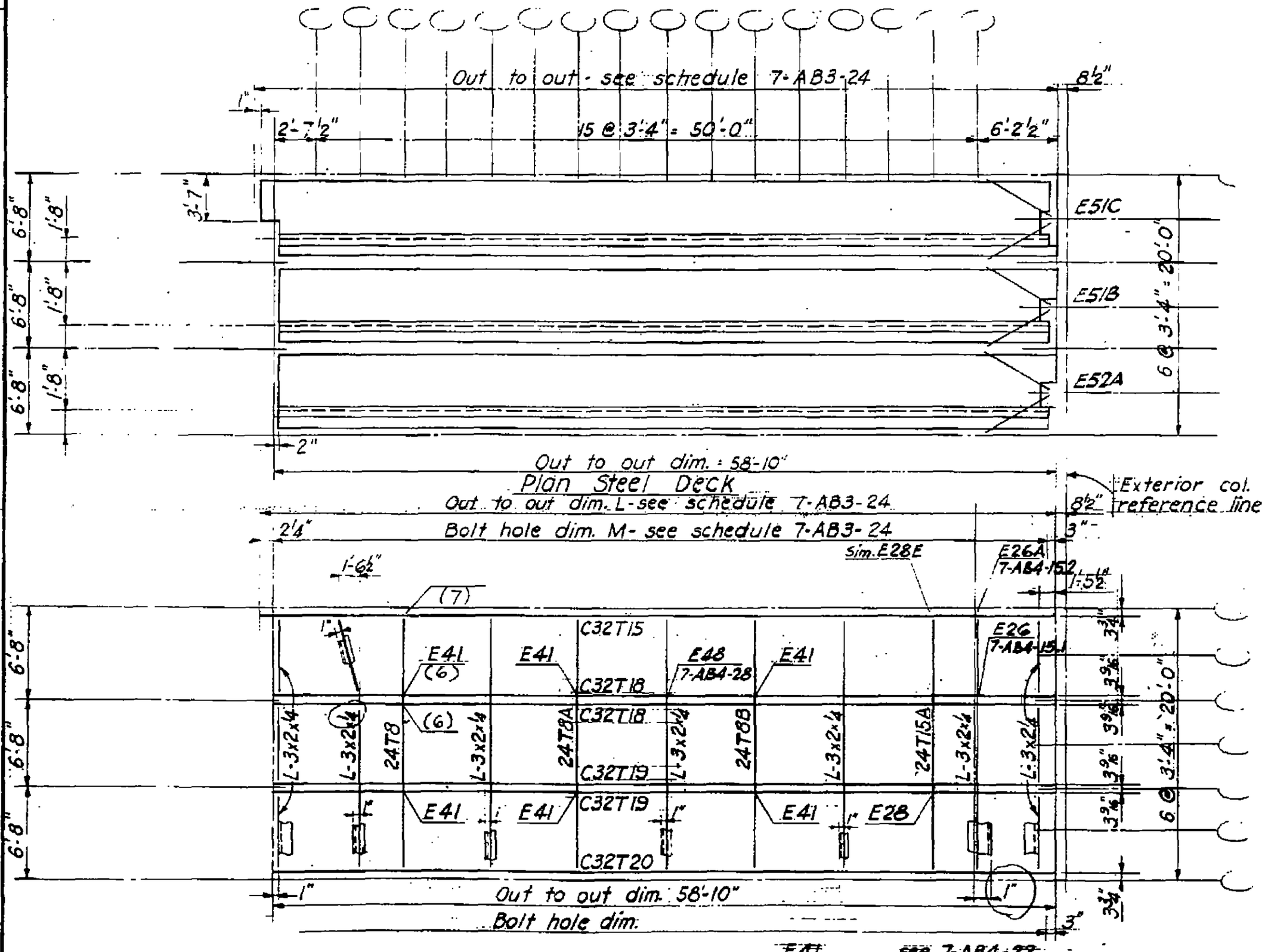

LICENSED PROFESSIONAL ENGINEER
LESLIE E. ROBERTSON
No. 34360
UNIVERSITY OF THE STATE OF NEW YORK

7-AB3-32

SKILLING - HELLE - CHRISTIANSEN - ROBERTSON Structural & Civil Engineers

PROJECT THE WORLD TRADE CENTER | TITLE FLOOR PANEL ER2 | DATE 8-15-68

REVISIONS

10-4-68

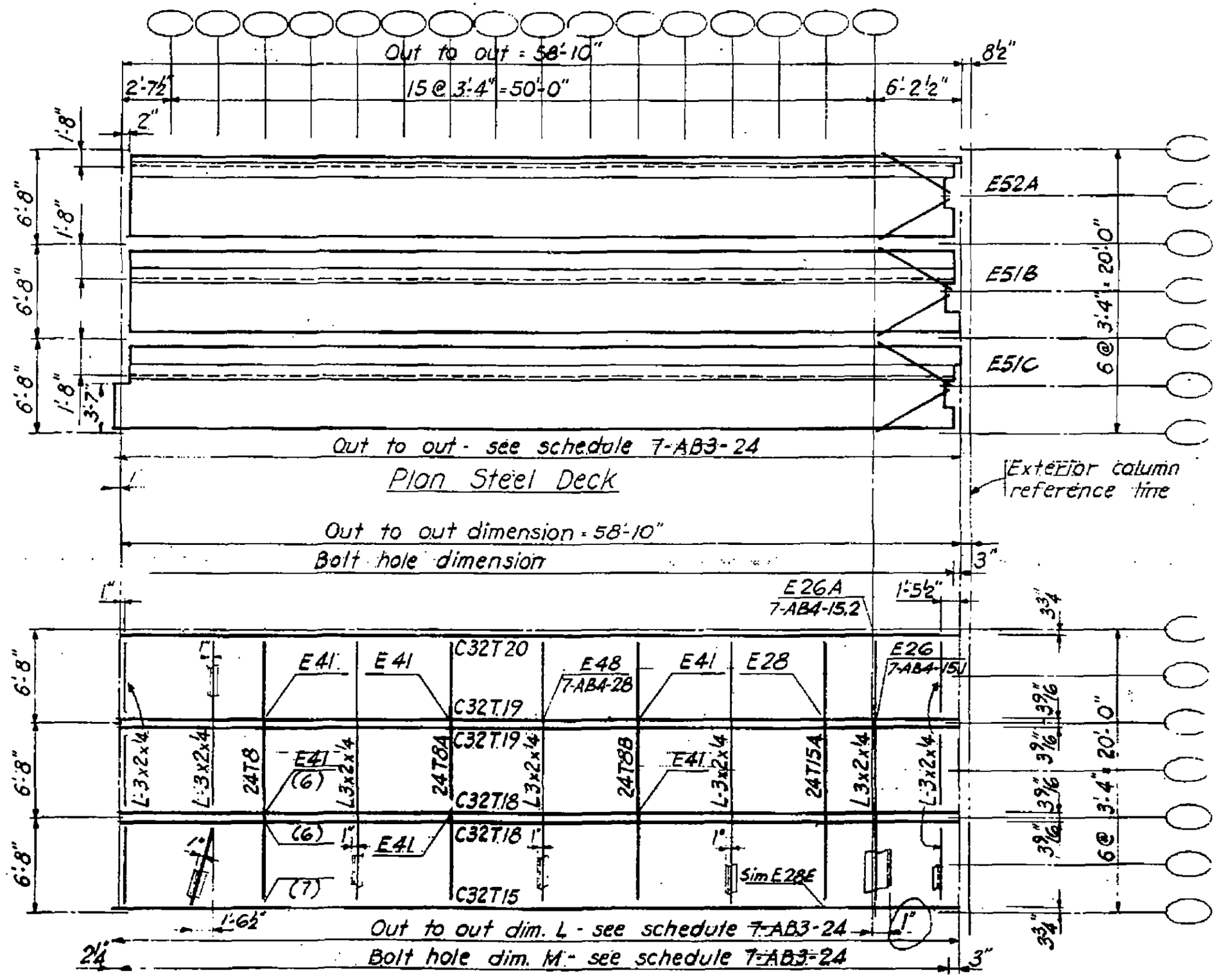

Plan Top Chord

E28 - 28F see 7-AB4-17
E41 see 7-AB4-22

7-AB3-33

LICENSED PROFESSIONAL ENGINEER
LESLIE E. ROBERTSON
No. 34360
REGISTERED TO THE STATE OF NEW YORK

SKILLING - HELLE - CHRISTIANSEN - ROBERTSON Structural & Civil Engineers

PROJECT THE WORLD TRADE CENTER | TITLE FLOOR PANEL F2 | DATE 8-15-68

REVISIONS

10-4-68

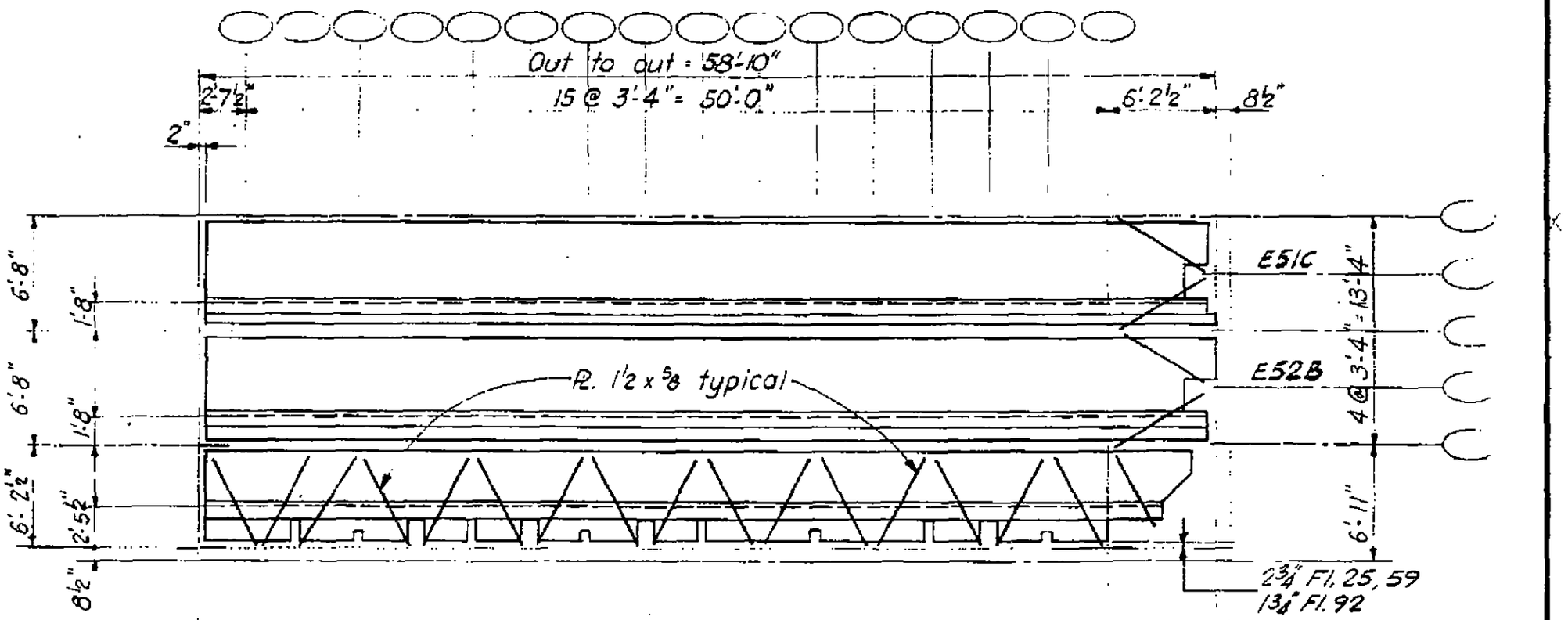

Plan Steel Deck

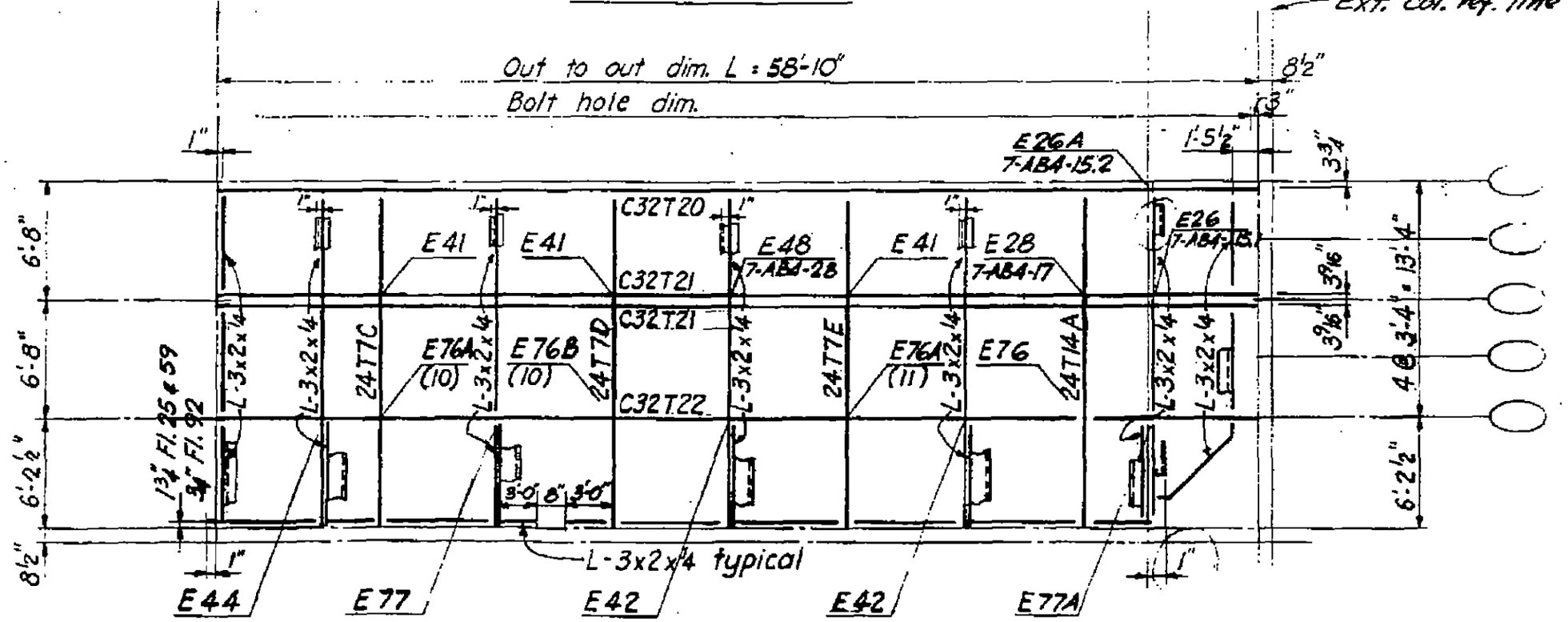

Plan Top Chord

E76-E77 see 7-AB4-57-61
E41-E44 see 7-AB4-22-25

7-AB3-34

LICENSED PROFESSIONAL ENGINEER
LESLIE E. ROBERTSON
No. 34360
OF THE STATE OF NEW YORK

SKILLING - HELLE - CHRISTIANSEN - ROBERTSON Structural & Civil Engineers

PROJECT THE WORLD TRADE CENTER | TITLE FLOOR PANEL FR2 | DATE 8-15-68

REVISIONS

10-4-68

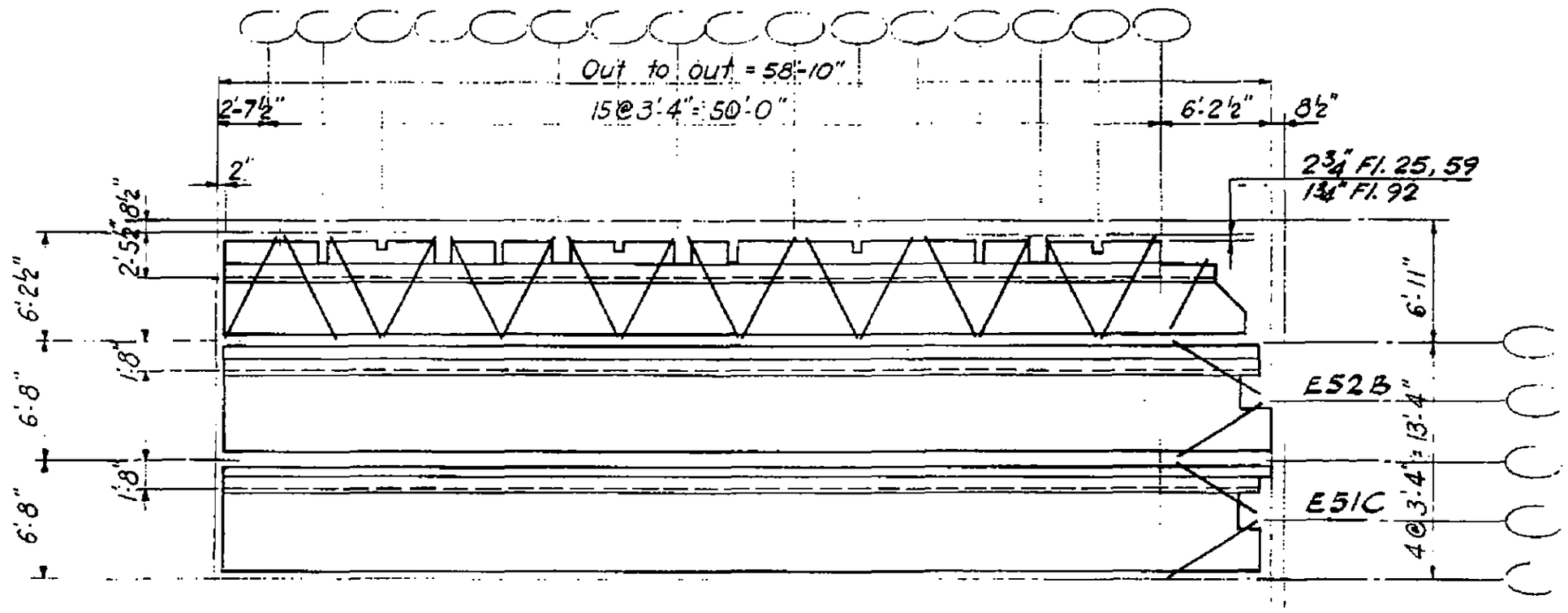

Plan Steel Deck

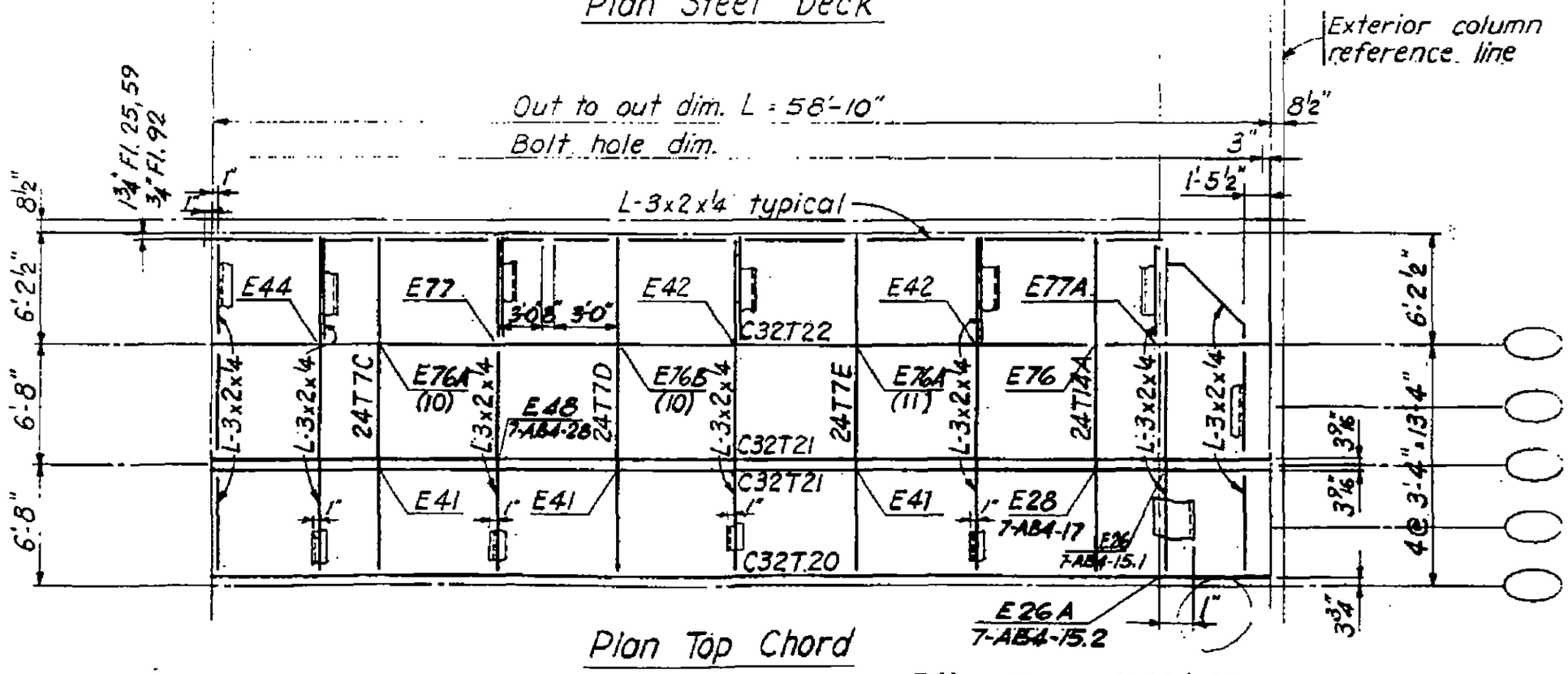

Plan Top Chord

E41 - E44 see 7-AB4-22-25
E76 - E77 see 7-AB4-57-61

7-AB3-35

LICENSED PROFESSIONAL ENGINEER
LESLIE E. ROBERTSON
No. 34540
UNIVERSITY OF THE STATE OF NEW YORK

SKILLING - HELLE - CHRISTIANSEN - ROBERTSON Structural & Civil Engineers

PROJECT THE WORLD TRADE CENTER | TITLE FLOOR PANEL G2 | DATE 8-15-68

REVISIONS

10-4-68

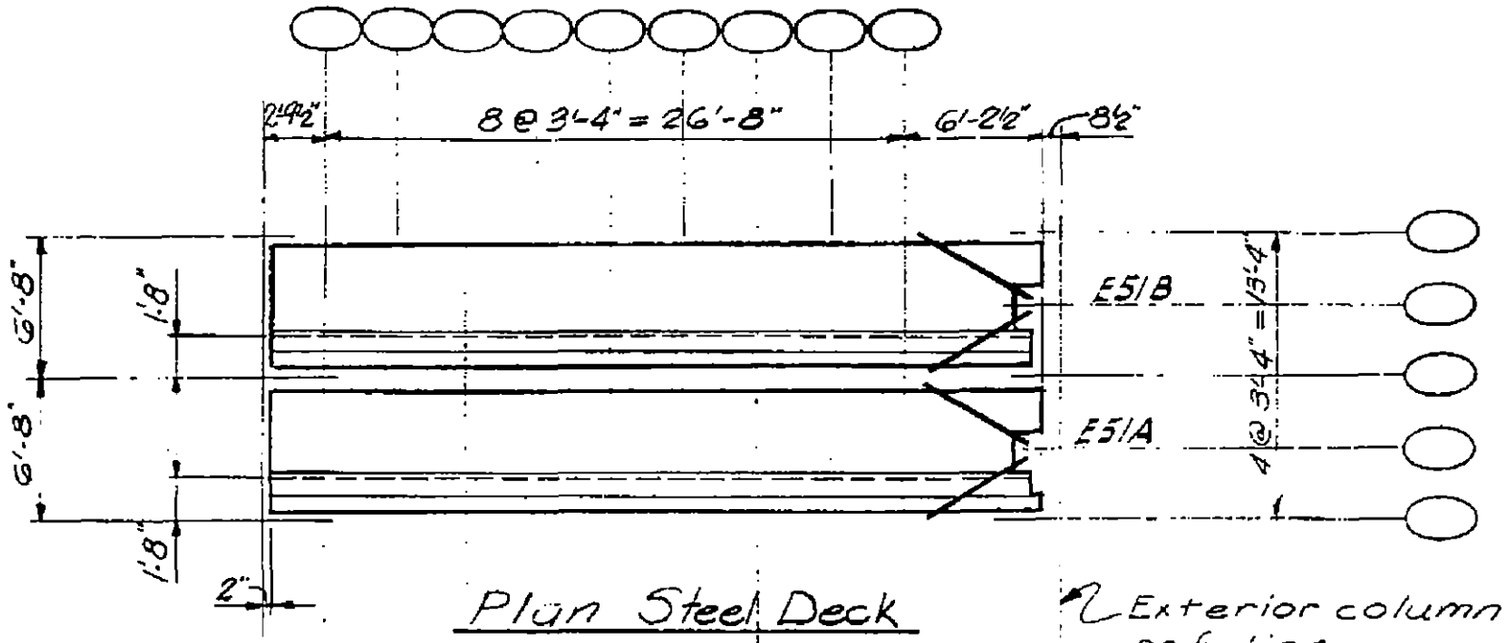

Plan Steel Deck

Exterior column ref. line.

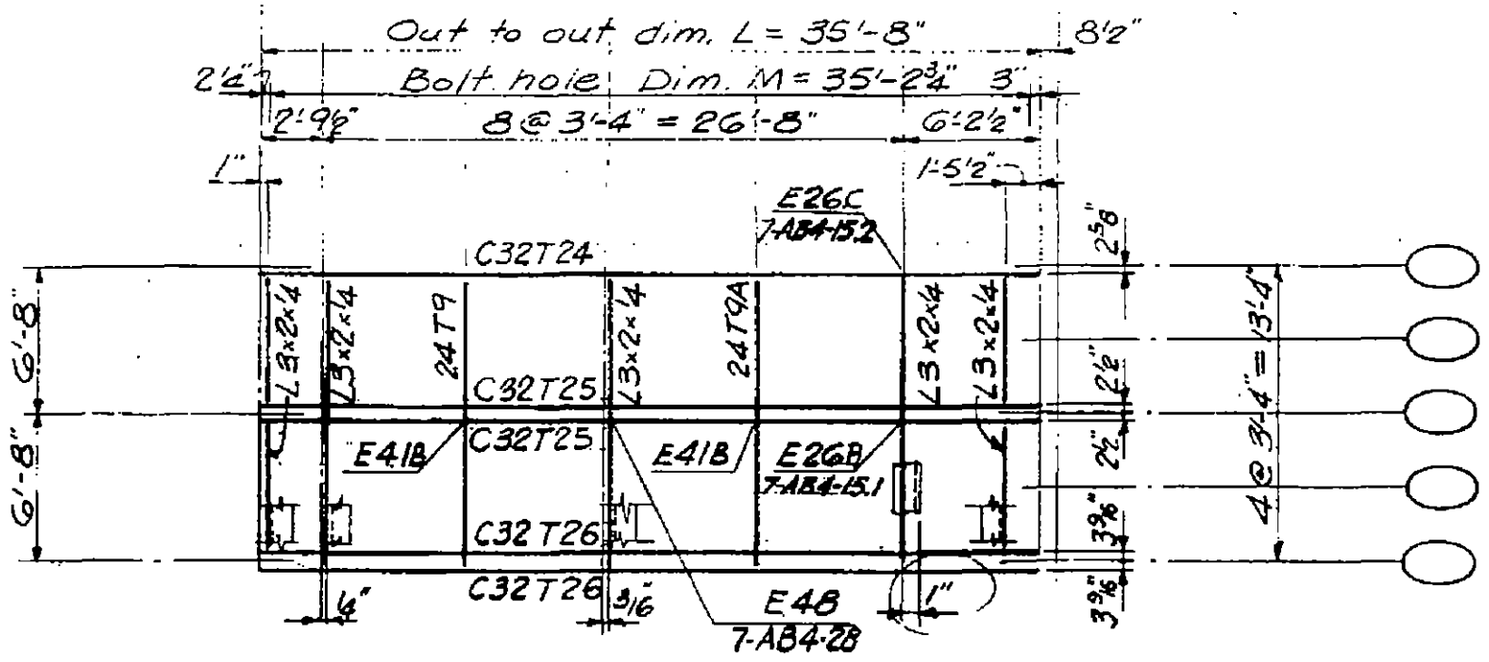

Plan Top Chord

E41B - see Dwg. 7-AB4-22.1

7-AB3-36

LICENSED PROFESSIONAL ENGINEER
LESLIE E. ROBERTSON
No. 34560
UNIVERSITY OF THE STATE OF NEW YORK

SKILLING - HELLE - CHRISTIANSEN - ROBERTSON Structural & Civil Engineers

PROJECT THE WORLD TRADE CENTER | TITLE FLOOR PANEL 6R2 | DATE 8-15-68

REVISIONS

10-4-68

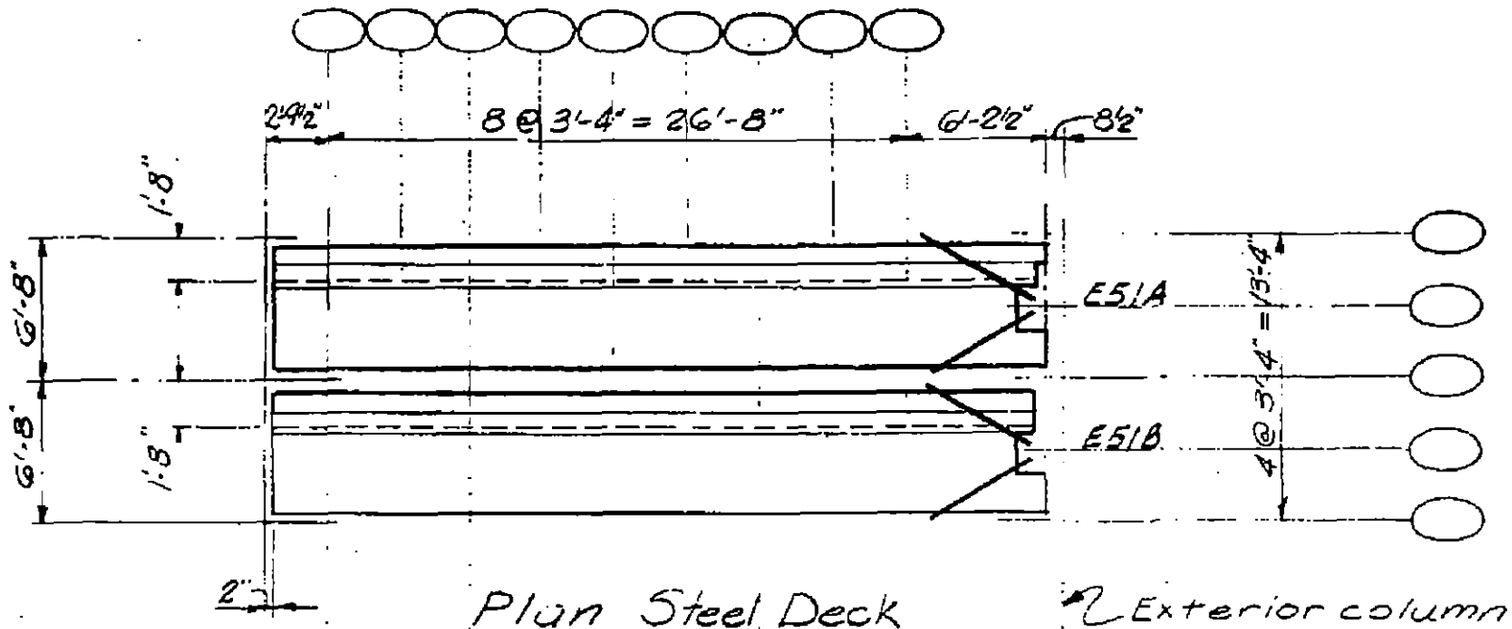

Plan Steel Deck

Exterior column ref. line.

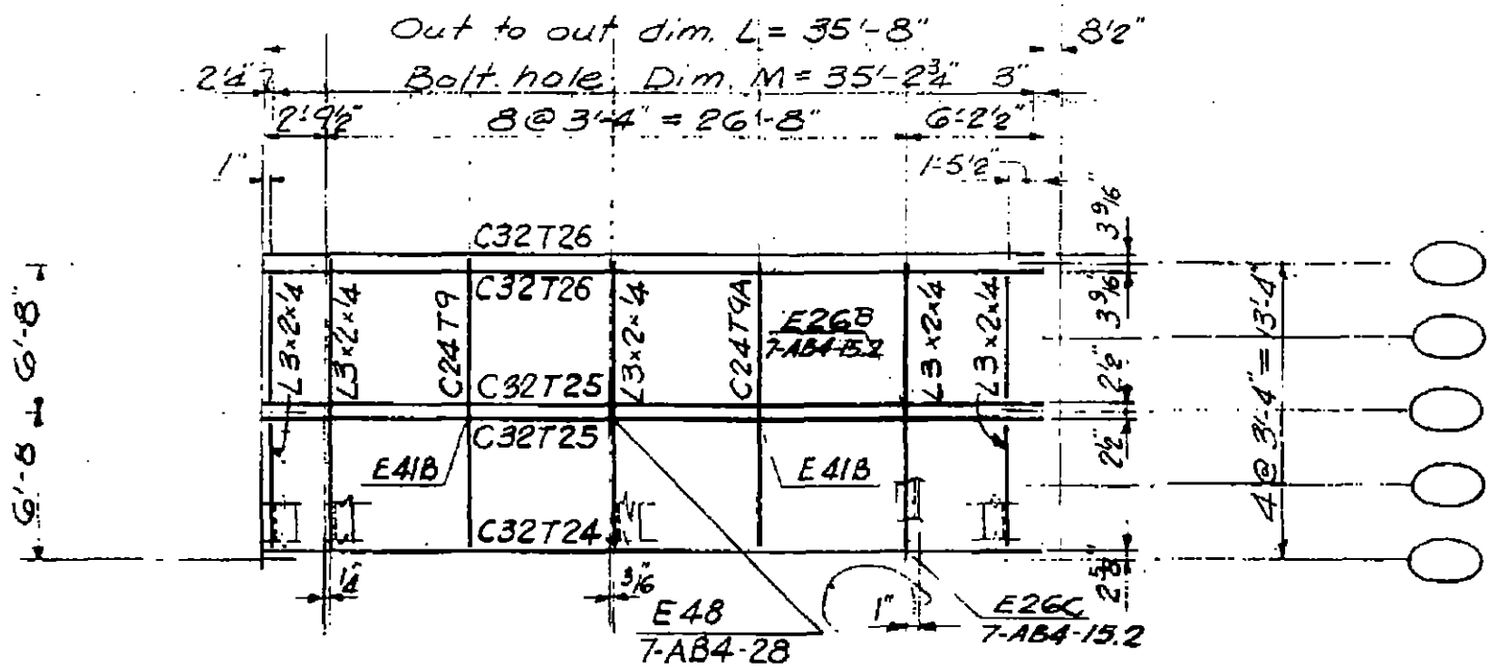

Plan Top Chord

E41B - see Dwg. 7-AB4-22.1

7-AB3-37

LICENSED PROFESSIONAL ENGINEER
LESLIE E. ROBERTSON
No. 34360
UNIVERSITY OF THE STATE OF NEW YORK

SKILLING - HELLE - CHRISTIANSEN - ROBERTSON Structural & Civil Engineers

PROJECT THE WORLD TRADE CENTER | TITLE FLOOR PANEL H2 & H7 | DATE 8-1-68

REVISIONS

8-15-68
10-4-68

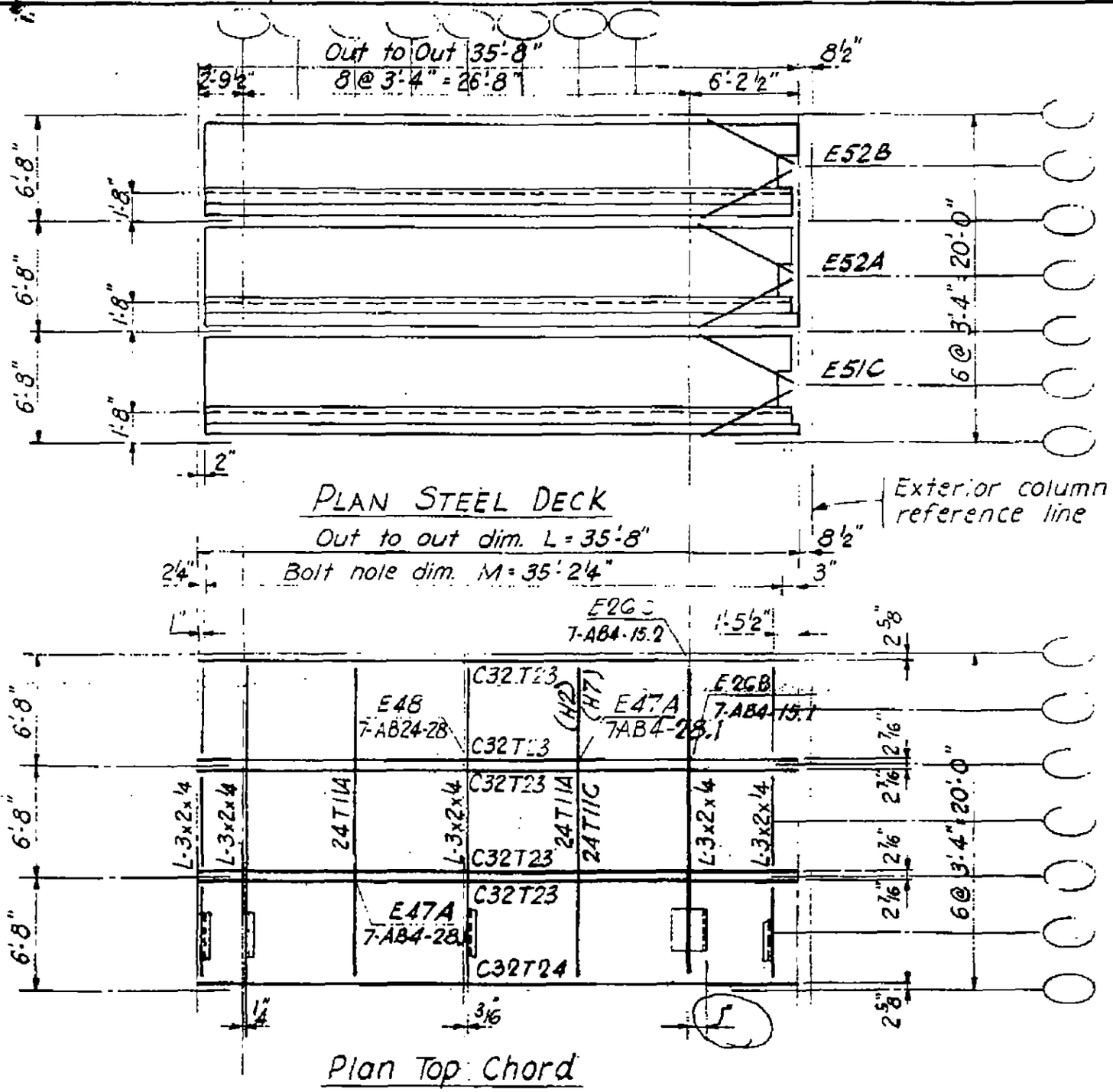

PLAN STEEL DECK

Out to out dim. L = 35'-8"

Bolt hole dim. M = 35'-2¼"

Plan Top Chord

LICENSED PROFESSIONAL ENGINEER
LESLIE E. ROBERTSON
NO. 3431
UNIVERSITY OF THE STATE OF NEW YORK

7-AB3-38

SKILLING - HELLE - CHRISTIANSEN - ROBERTSON Structural & Civil Engineers

PROJECT THE WORLD TRADE CENTER | TITLE FLOOR PANEL HR2 & HR7 | DATE 8-1-68

REVISIONS

8-15-68
10-4-68

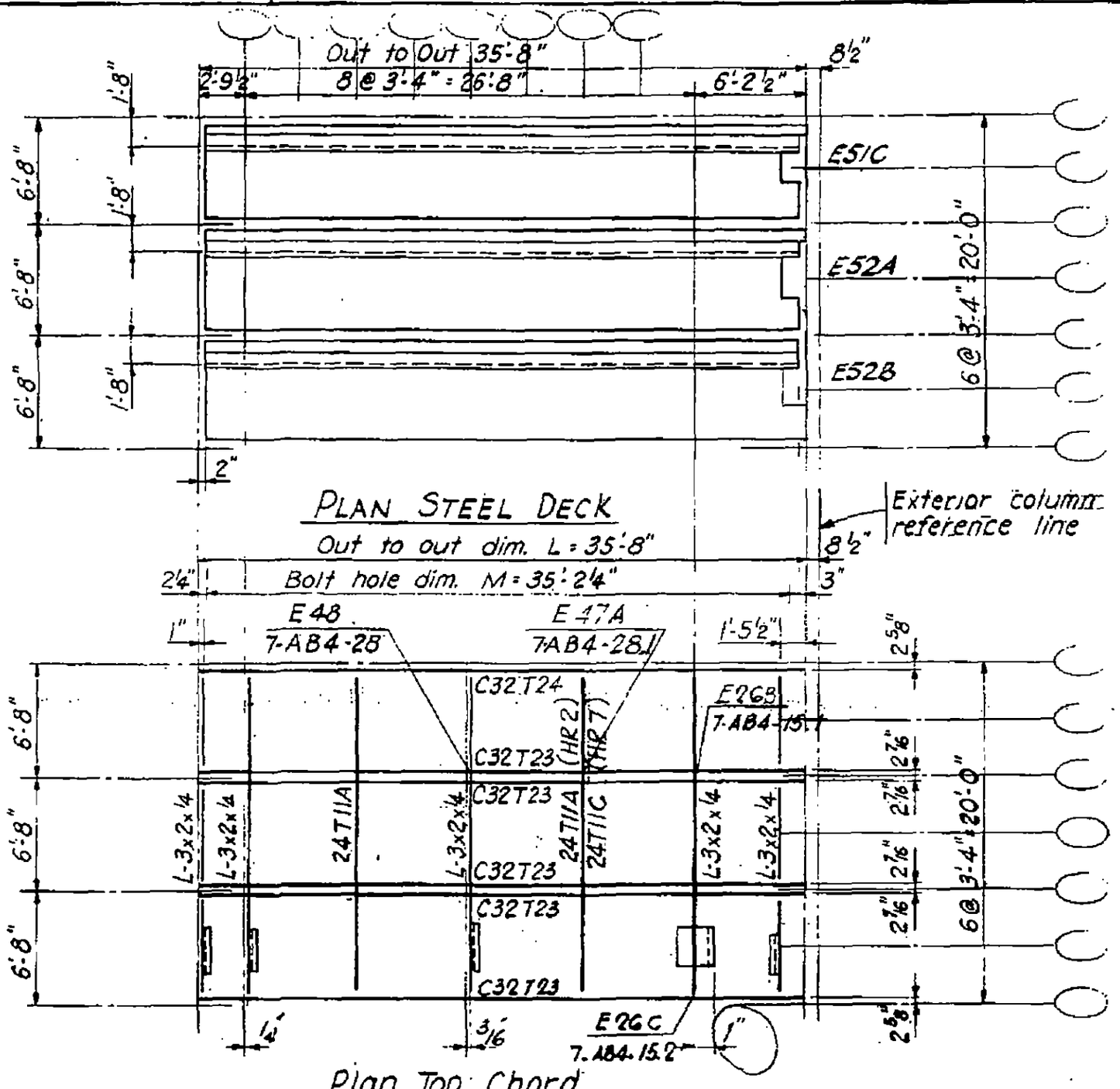

7-AB3-39

SKILLING - HELLE - CHRISTIANSEN - ROBERTSON Structural & Civil Engineers

PROJECT THE WORLD TRADE CENTER | TITLE FLOOR PANEL J2 | DATE 8-1-68

REVISIONS

8-15-68
10-4-68

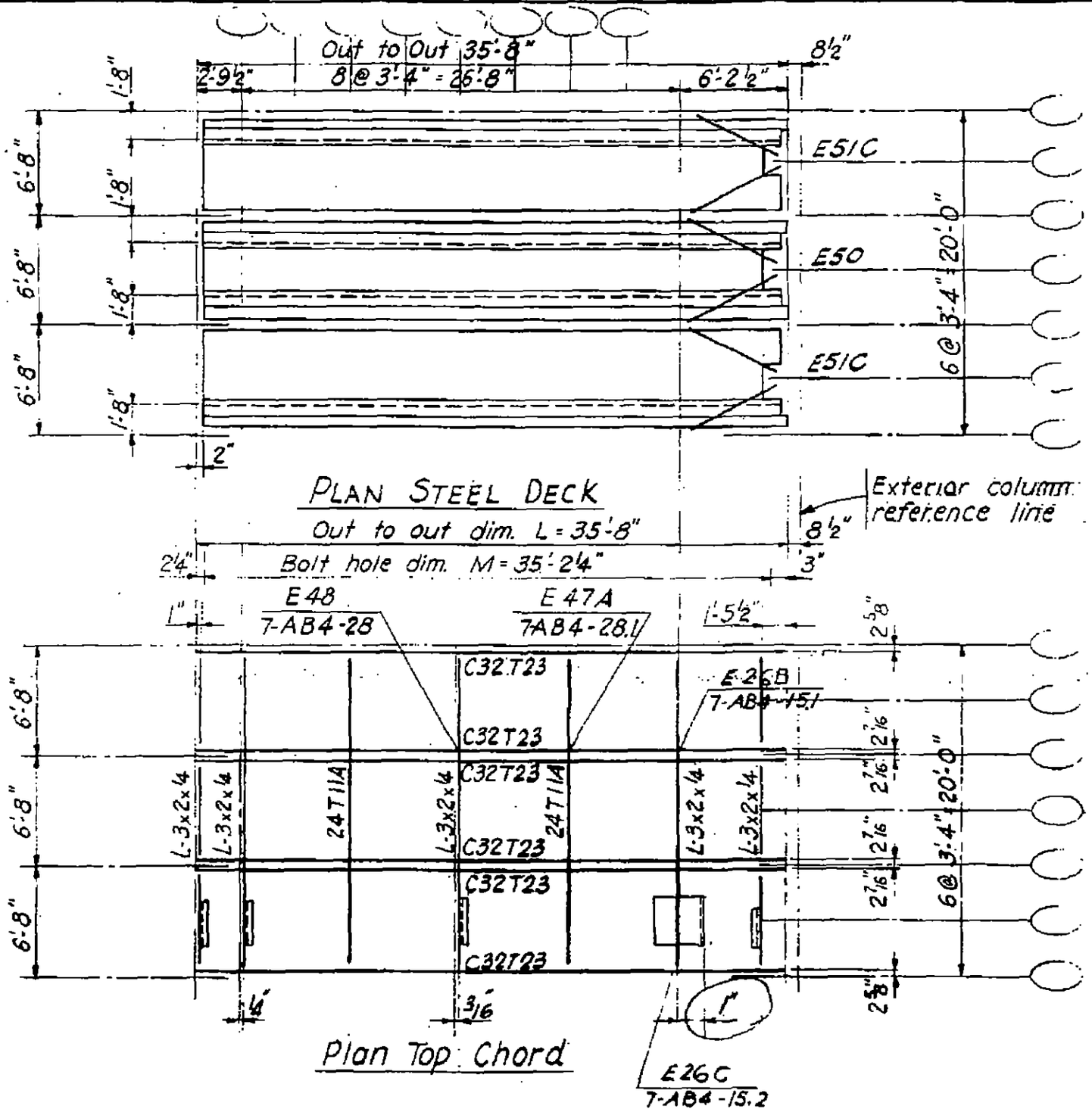

7-AB3-40

SKILLING, HELLE, CHRISTIANSEN, ROBERTSON — Structural & Civil Engineers

PROJECT: THE WORLD TRADE CENTER | TITLE: FLOOR PANEL - DIMENSION SCHEDULE 3 | DATE: 1-6-69

REVISIONS

PANEL NO.									OUT TO OUT PANEL DIM. L	BOLT HOLE DIMENSION M	DIMENSION A
A3A	B3A	BR3A	C3A	CR3A	D3A	DR3A	E3A	ER3A	59'-9"	59'-3¾"	5'-2½"
A3B	B3B	BR3B	C3B	CR3B	D3B	DR3B	E3B	ER3B	59'-8½"	59'-3¼"	5'-2"
A3C	B3C	BR3C	C3C	CR3C	D3C	DR3C	E3C	ER3C	59'-8"	59'-2¾"	5'-1½"
A3D	B3D	BR3D	C3D	CR3D	D3D	DR3D	E3D	ER3D	59'-5"	58'-11¾"	4'-10½"
A3E	B3E	BR3E	C3E	CR3E	D3E	DR3E	E3E	ER3E	59'-3"	58'-9¾"	4'-8½"
A3F	B3F	BR3F	C3F	CR3F	D3F	DR3F	E3F	ER3F	59'-2"	58'-8¾"	4'-7½"
A3G	B3G	BR3G	C3G	CR3G	D3G	DR3G	E3G	ER3G	58'-11"	58'-5¾"	4'-4½"
A3H	B3H	BR3H	C3H	CR3H	D3H	DR3H	E3H	ER3H	58'-8"	58'-2¾"	4'-1½"
A3J	B3J	BR3J	C3J	CR3J	D3J	DR3J	E3J	ER3J	58'-7"	58'-1¾"	4'-0½"
A3K	B3K	BR3K	C3K	CR3K	D3K	DR3K	E3K	ER3K	58'-6"	58'-0¾"	3'-11½"
A3M	B3M	BR3M	C3M	CR3M	D3M	DR3M	E3M	ER3M	58'-3"	57'-9¾"	3'-8½"
A3N	B3N	BR3N	C3N	CR3N	D3N	DR3N	E3N	ER3N	57'-9"	57'-3¾"	3'-2½"
A3P	B3P	BR3P	C3P	CR3P	D3P	DR3P	E3P	ER3P	57'-7"	57'-1¾"	3'-0½"

LICENSED PROFESSIONAL ENGINEER — LESLIE E. ROBERTSON — No. 34360 — UNIVERSITY OF THE STATE OF NEW YORK

DESIGNED

DRAWN

REVIEWED

25

7-AB3-41

SKILLING - HELLE - CHRISTIANSEN - ROBERTSON Structural & Civil Engineers

PROJECT THE WORLD TRADE CENTER | TITLE FLOOR PANEL A3 | DATE 1-6-69

REVISIONS

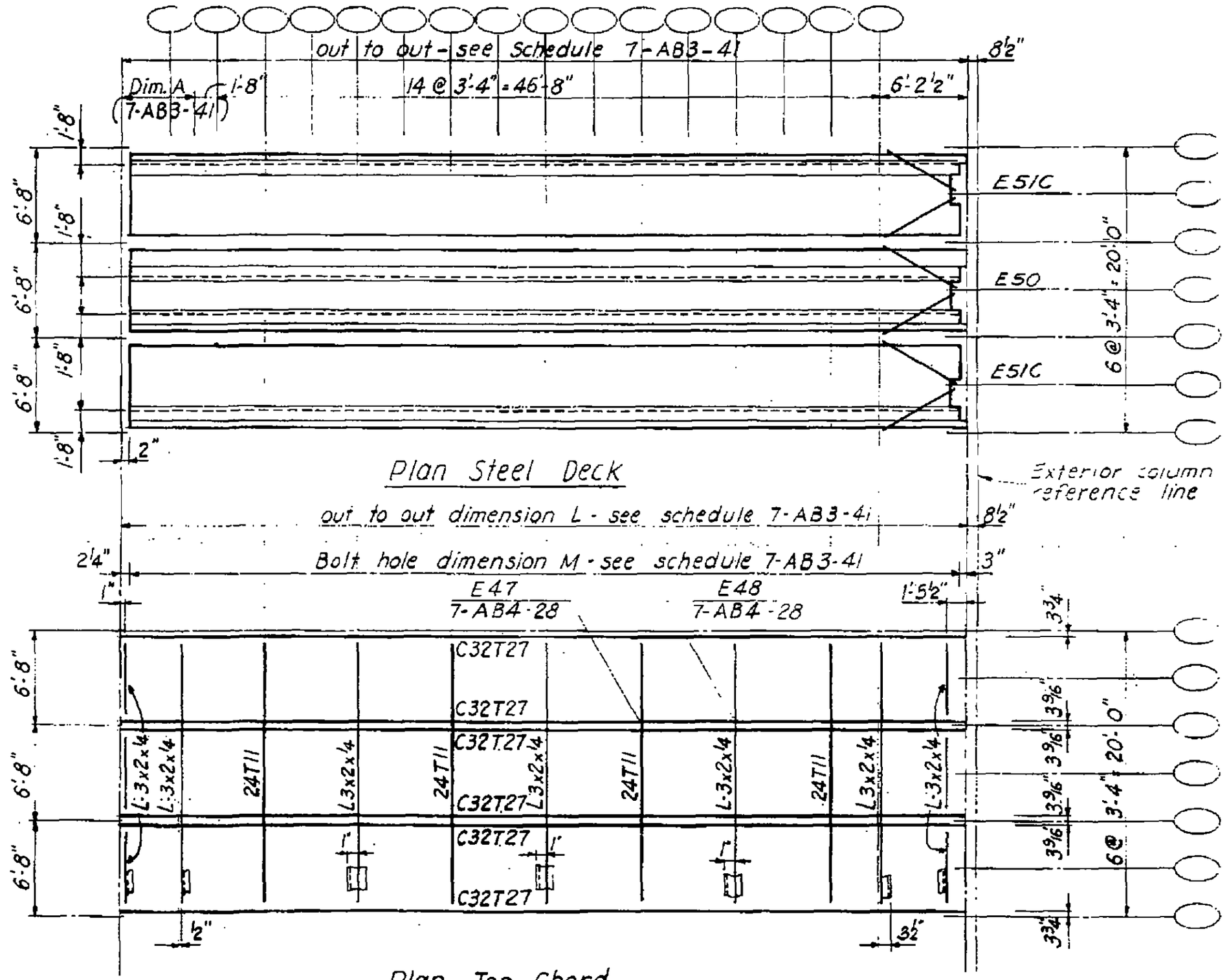

Plan Steel Deck

out to out dimension L - see schedule 7-AB3-41

Bolt hole dimension M - see schedule 7-AB3-41

Plan Top Chord

LICENSED PROFESSIONAL ENGINEER
LESLIE E. ROBERTSON
No. 34360
UNIVERSITY OF THE STATE OF NEW YORK

7-AB3-42

SKILLING - HELLE - CHRISTIANSEN - ROBERTSON Sfructural & Civil Engineers

PROJECT THE WORLD TRADE CENTER | TITLE FLOOR PANEL B3 | DATE 1-6-69

REVISIONS

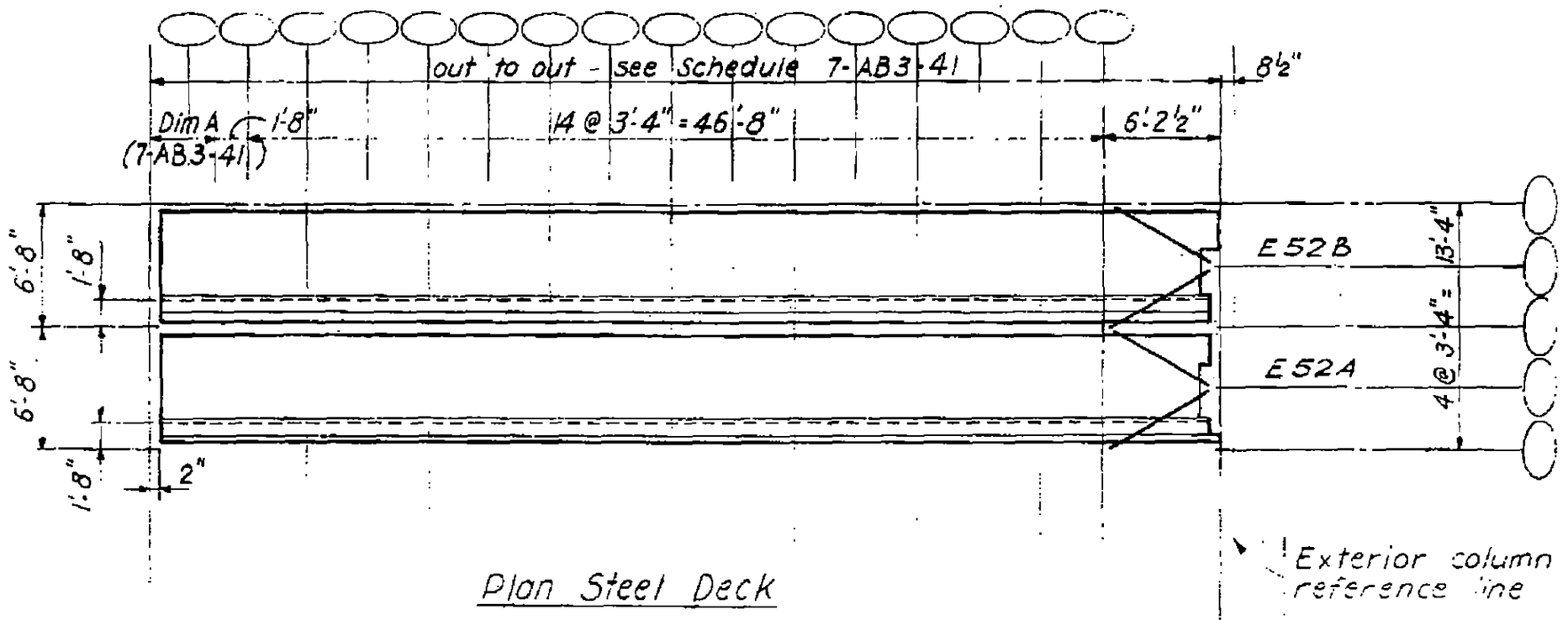

Plan Steel Deck

Exterior column reference line

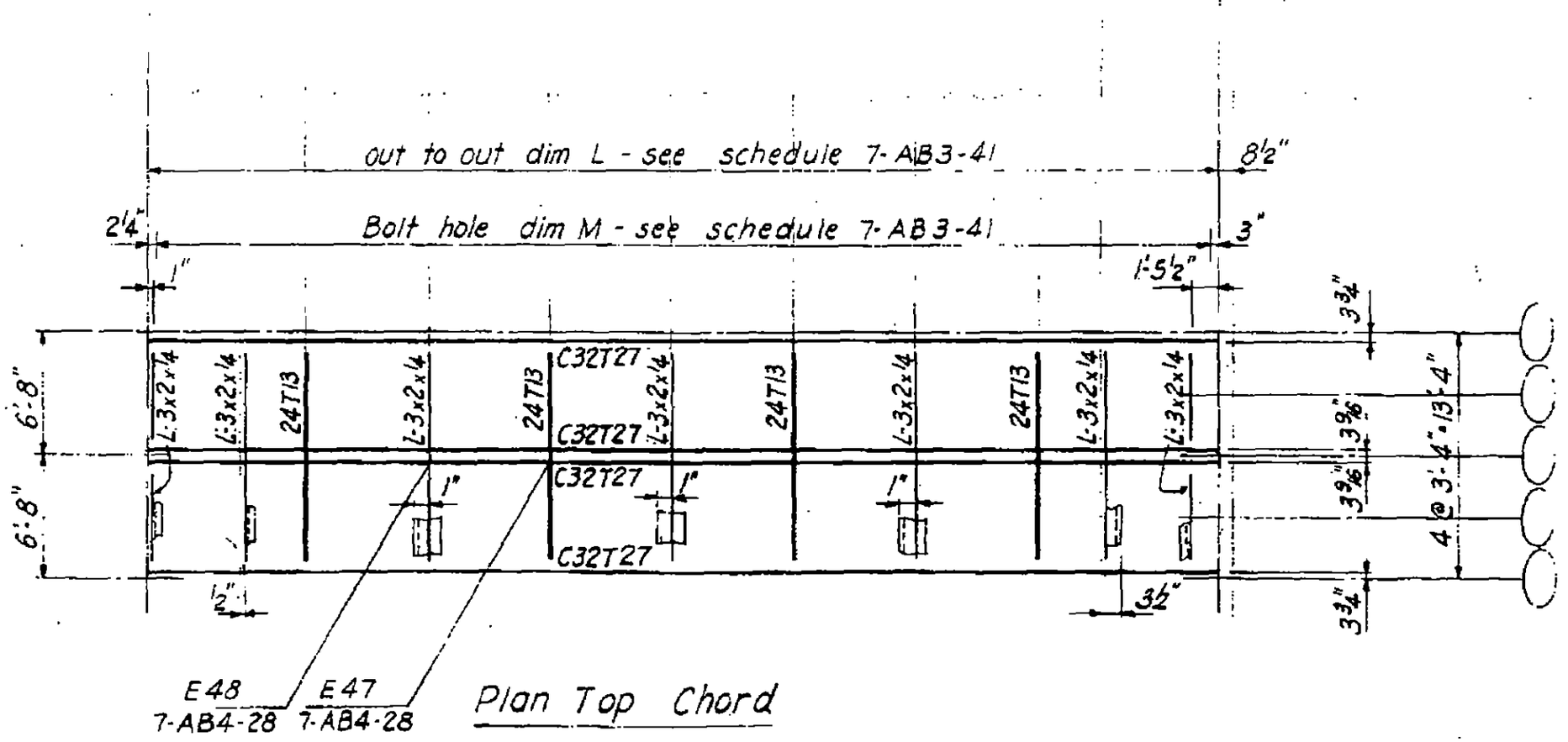

Plan Top Chord

LICENSED PROFESSIONAL ENGINEER
LESLIE E. ROBERTSON
No. 34360
UNIVERSITY OF THE STATE OF NEW YORK

7-AB3-43

SKILLING - HELLE - CHRISTIANSEN - ROBERTSON Structural & Civil Engineers

PROJECT THE WORLD TRADE CENTER | TITLE FLOOR PANEL BR3 | DATE 1-6-69

REVISIONS

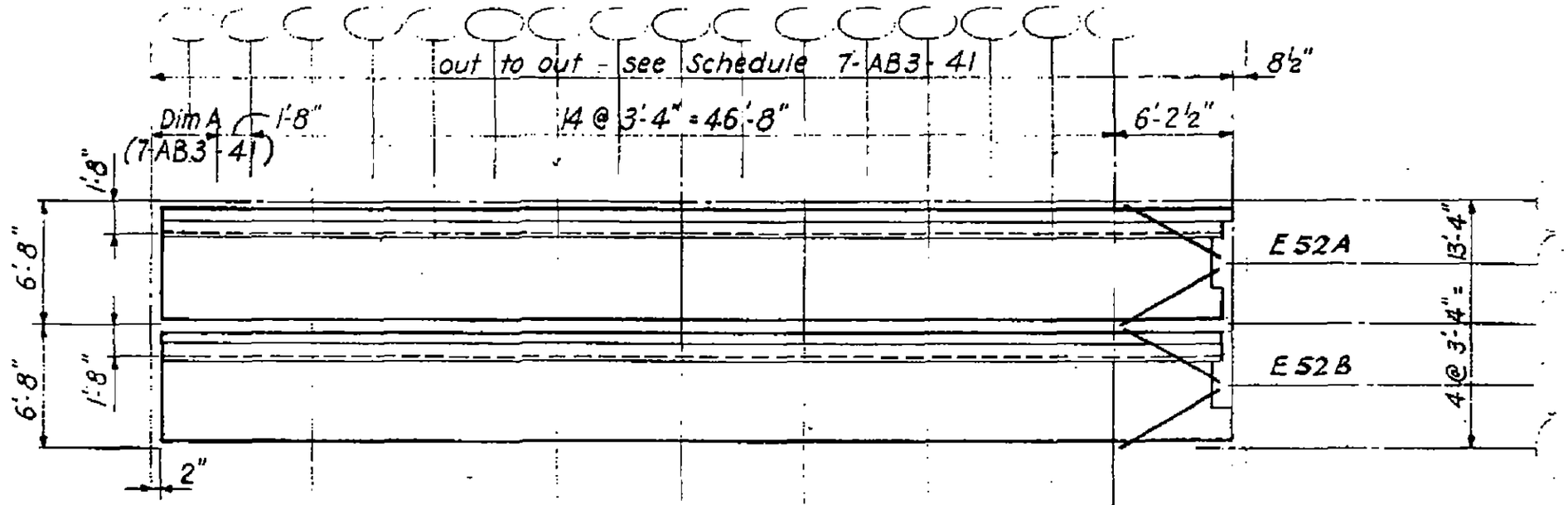

Plan Steel Deck

Exterior column reference line

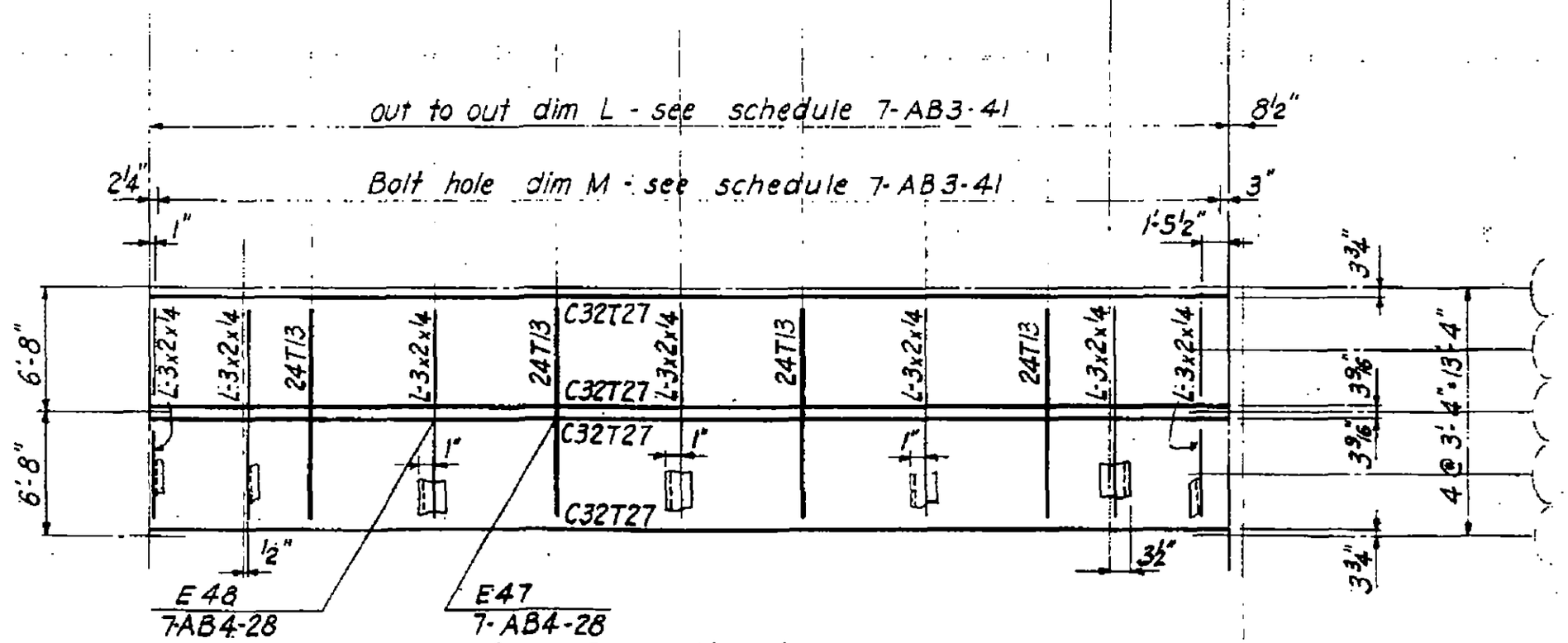

Plan Top Chord

LICENSED PROFESSIONAL ENGINEER
LESLIE E. ROBERTSON
No. 34360
OF THE STATE OF NEW YORK

7-AB3-44

SKILLING - HELLE - CHRISTIANSEN - ROBERTSON Structural & Civil Engineers

PROJECT THE WORLD TRADE CENTER | TITLE FLOOR PANEL C3 | DATE 1-6-69

REVISIONS

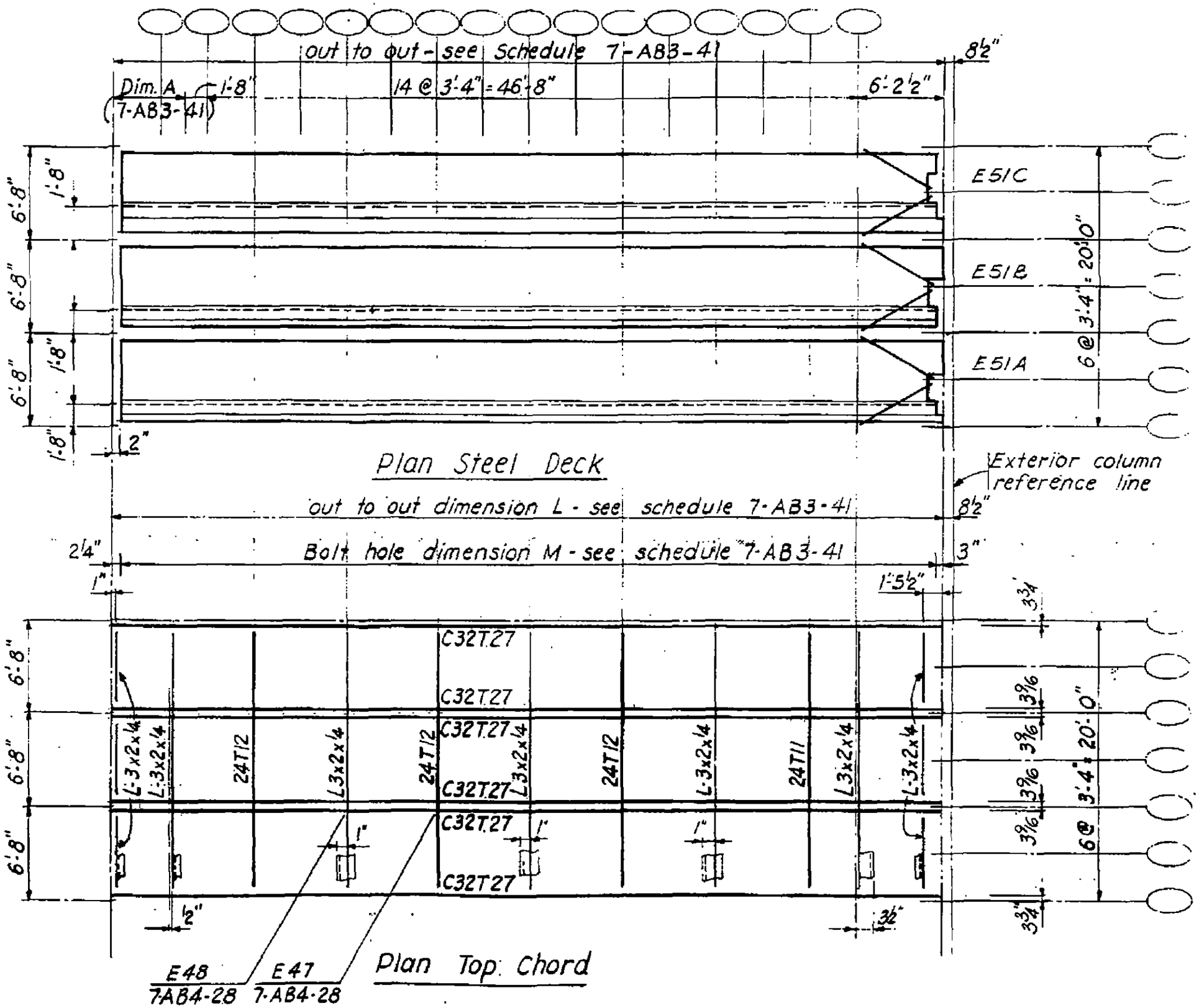

LICENSED PROFESSIONAL ENGINEER
LESLIE E. ROBERTSON
No. 34360
OF THE STATE OF NEW YORK

7-AB3-45

SKILLING - HELLE - CHRISTIANSEN - ROBERTSON Structural & Civil Engineers

PROJECT THE WORLD TRADE CENTER | TITLE FLOOR PANEL CR3 | DATE 1-6-69

REVISIONS

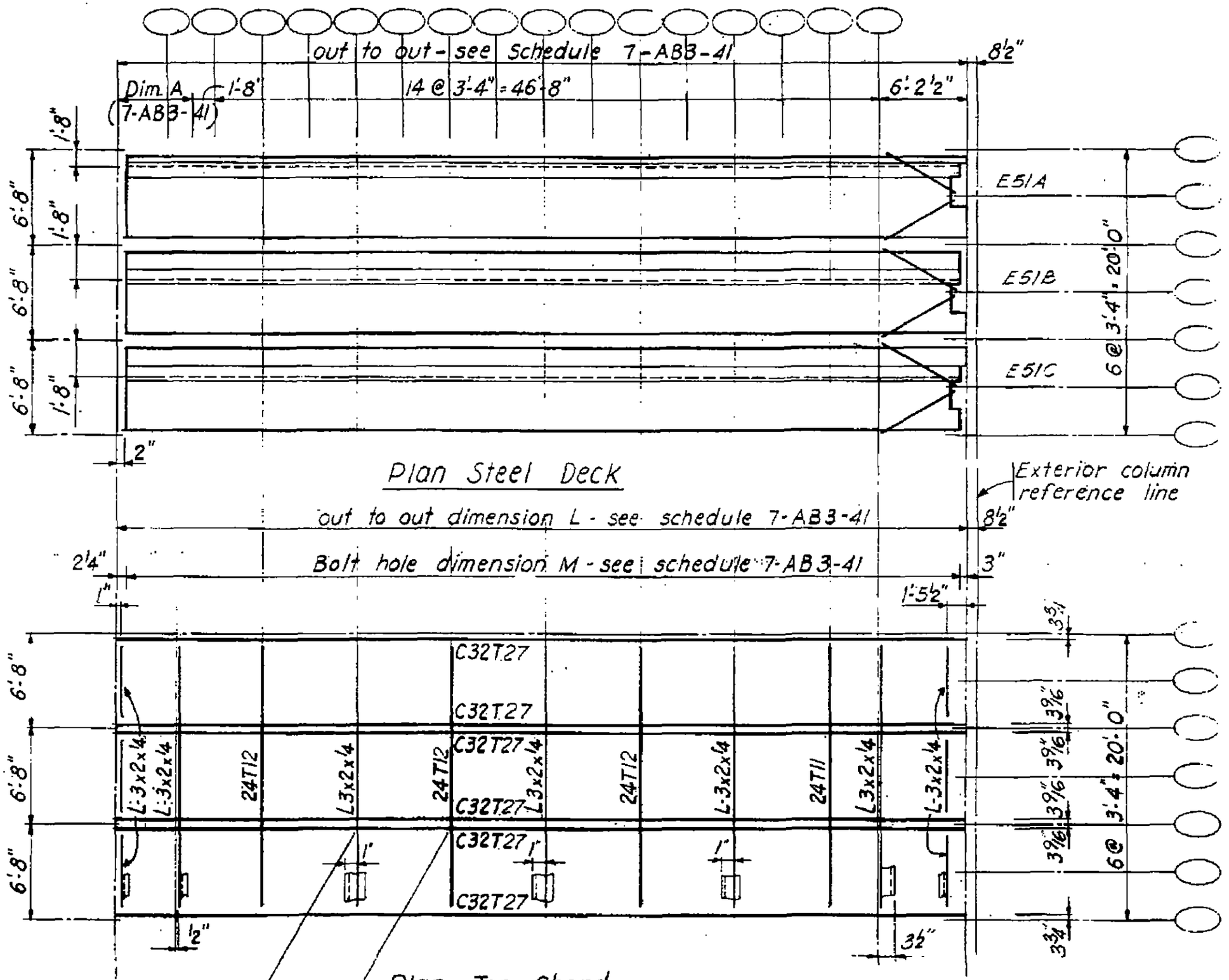

LICENSED PROFESSIONAL ENGINEER
LESLIE E. ROBERTSON
No. 34360
THE STATE OF NEW YORK

7-AB3-46

30

SKILLING - HELLE - CHRISTIANSEN - ROBERTSON Structural & Civil Engineers

PROJECT THE WORLD TRADE CENTER | TITLE FLOOR PANEL D3 | DATE 1-6-69

REVISIONS

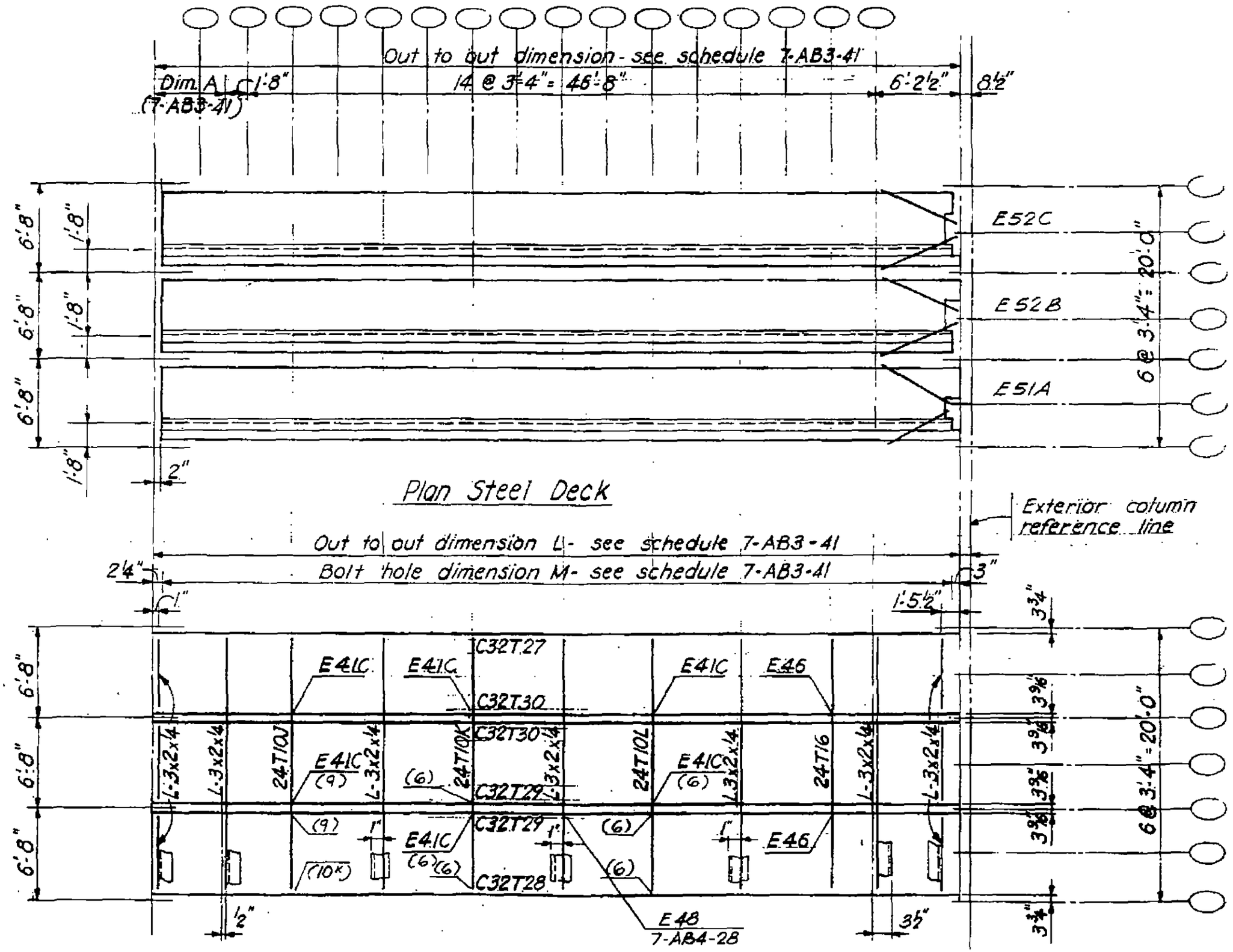

E41C & E46 see 7-AB4-22, 22.1

7-AB3-47

LICENSED PROFESSIONAL ENGINEER
LESLIE E. ROBERTSON
No. 34360
UNIVERSITY OF THE STATE OF NEW YORK

31

3

SKILLING - HELLE - CHRISTIANSEN - ROBERTSON Structural & Civil Engineers

PROJECT THE WORLD TRADE CENTER | TITLE FLOOR PANEL DR3 | DATE 1-6-69

REVISIONS

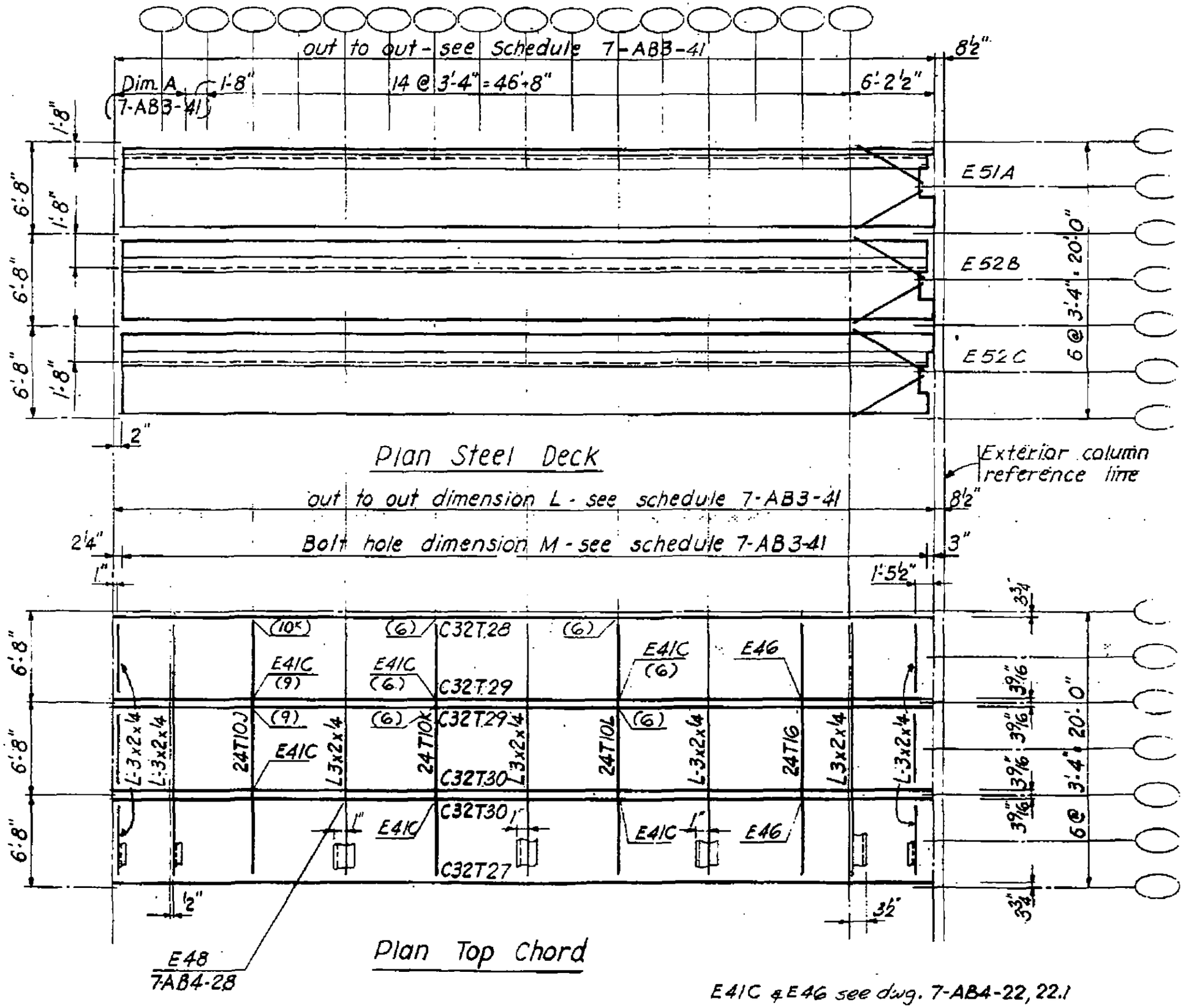

E41C & E46 see dwg. 7-AB4-22, 22.1

7-AB3-48

LICENSED PROFESSIONAL ENGINEER LESLIE E. ROBERTSON No. 34360 UNIVERSITY OF THE STATE OF NEW YORK

32

SKILLING - HELLE - CHRISTIANSEN - ROBERTSON Structural & Civil Engineers

PROJECT THE WORLD TRADE CENTER | TITLE FLOOR PANEL E3 | DATE 1-6-69

REVISIONS

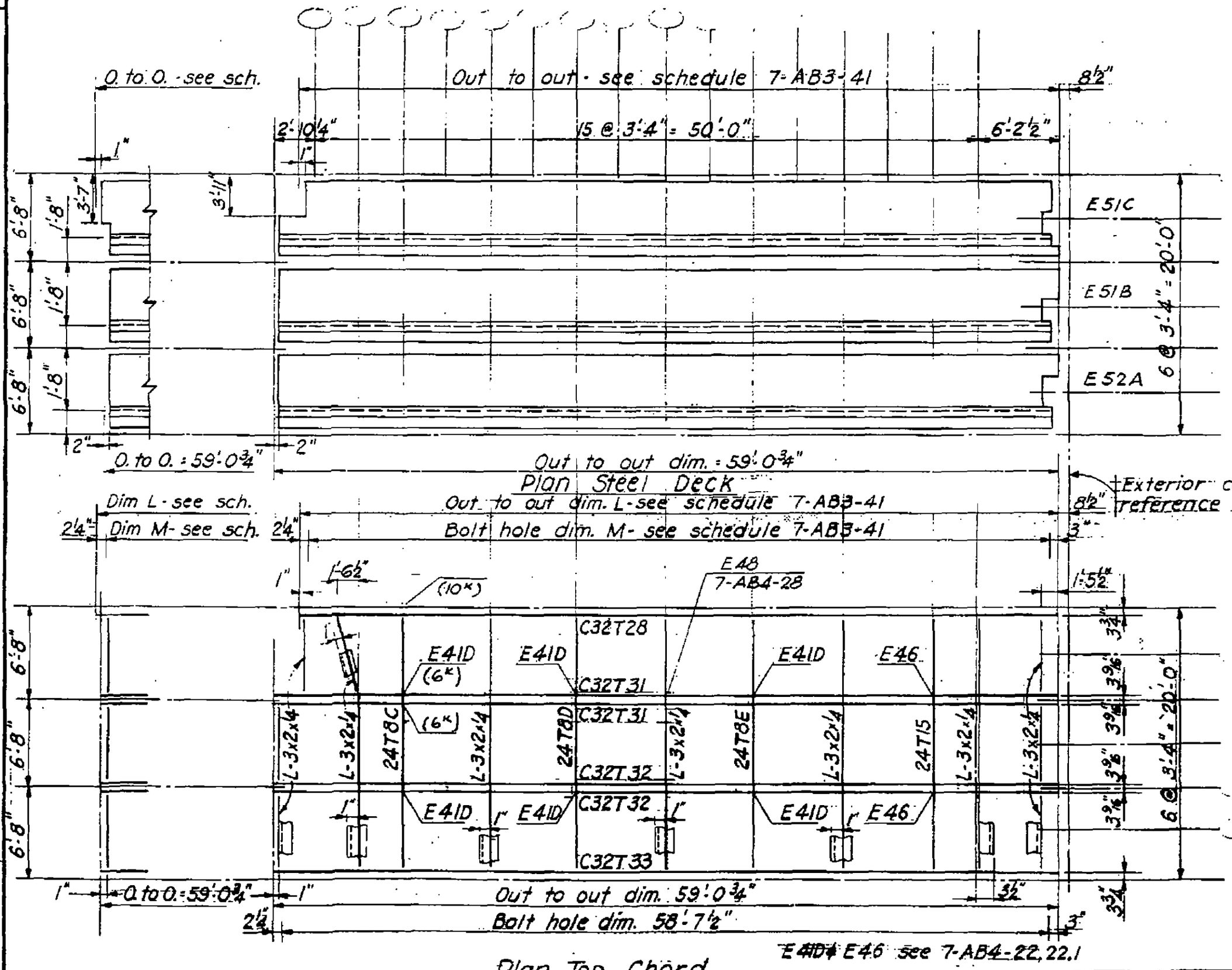

E41D & E46 see 7-AB4-22, 22.1

Plan Top Chord

7-AB3-49

LICENSED PROFESSIONAL ENGINEER
LESLIE E. ROBERTSON
No. 34360
UNIVERSITY OF THE STATE OF NEW YORK

33

SKILLING - HELLE - CHRISTIANSEN - ROBERTSON Structural & Civil Engineers

PROJECT THE WORLD TRADE CENTER | TITLE FLOOR PANEL ER3 | DATE 1-6-69

REVISIONS

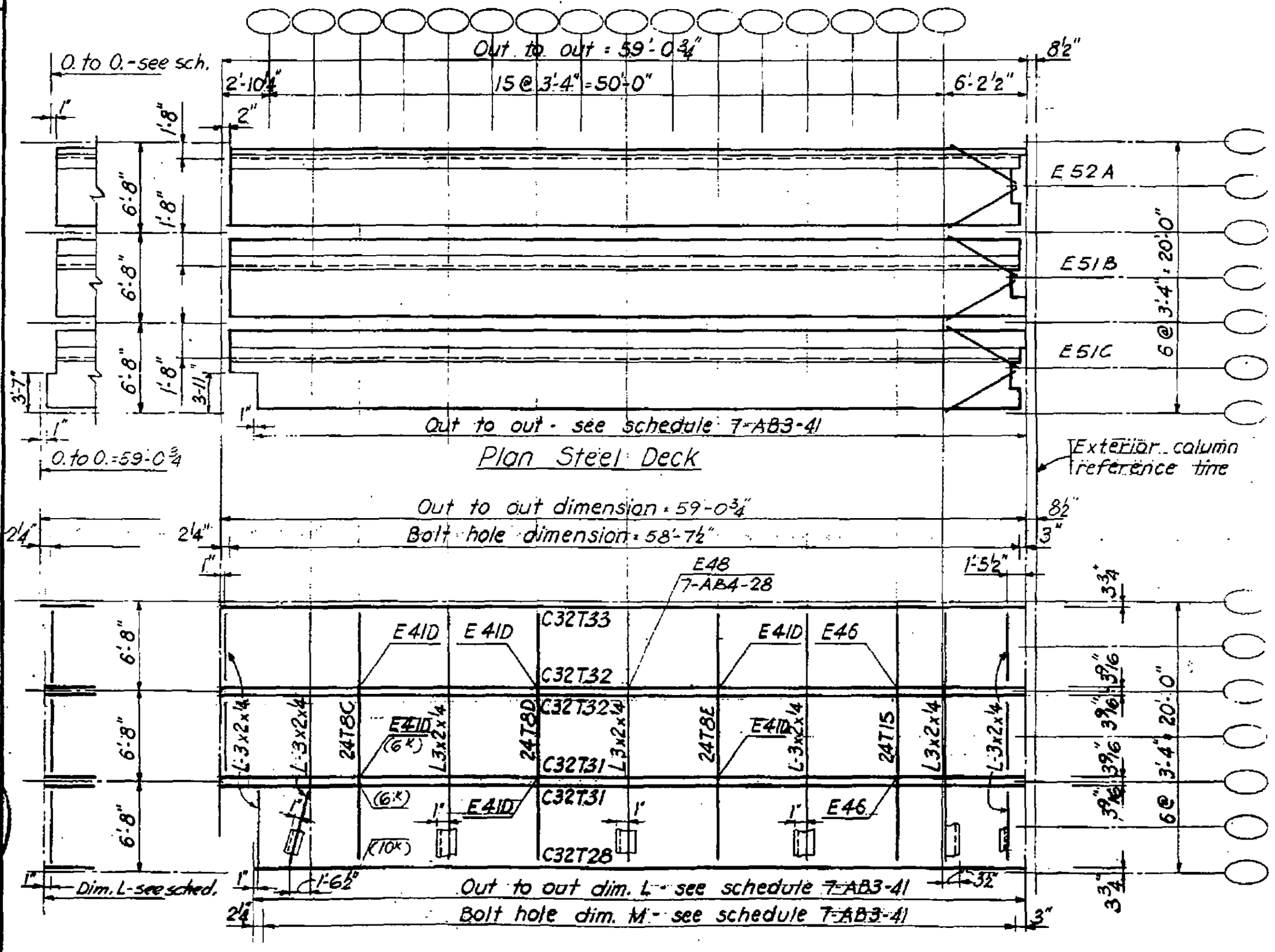

Plan Steel Deck

Plan Top Chord

E41 & E46 see 7-AB4-22,22.1

7-AB3-50

LICENSED PROFESSIONAL ENGINEER
LESLIE E. ROBERTSON
No. 34360
UNIVERSITY OF THE STATE OF NEW YORK

34
4

SKILLING - HELLE - CHRISTIANSEN - ROBERTSON Structural & Civil Engineers

PROJECT THE WORLD TRADE CENTER | TITLE FLOOR PANEL F3 | DATE 1-6-69

REVISIONS

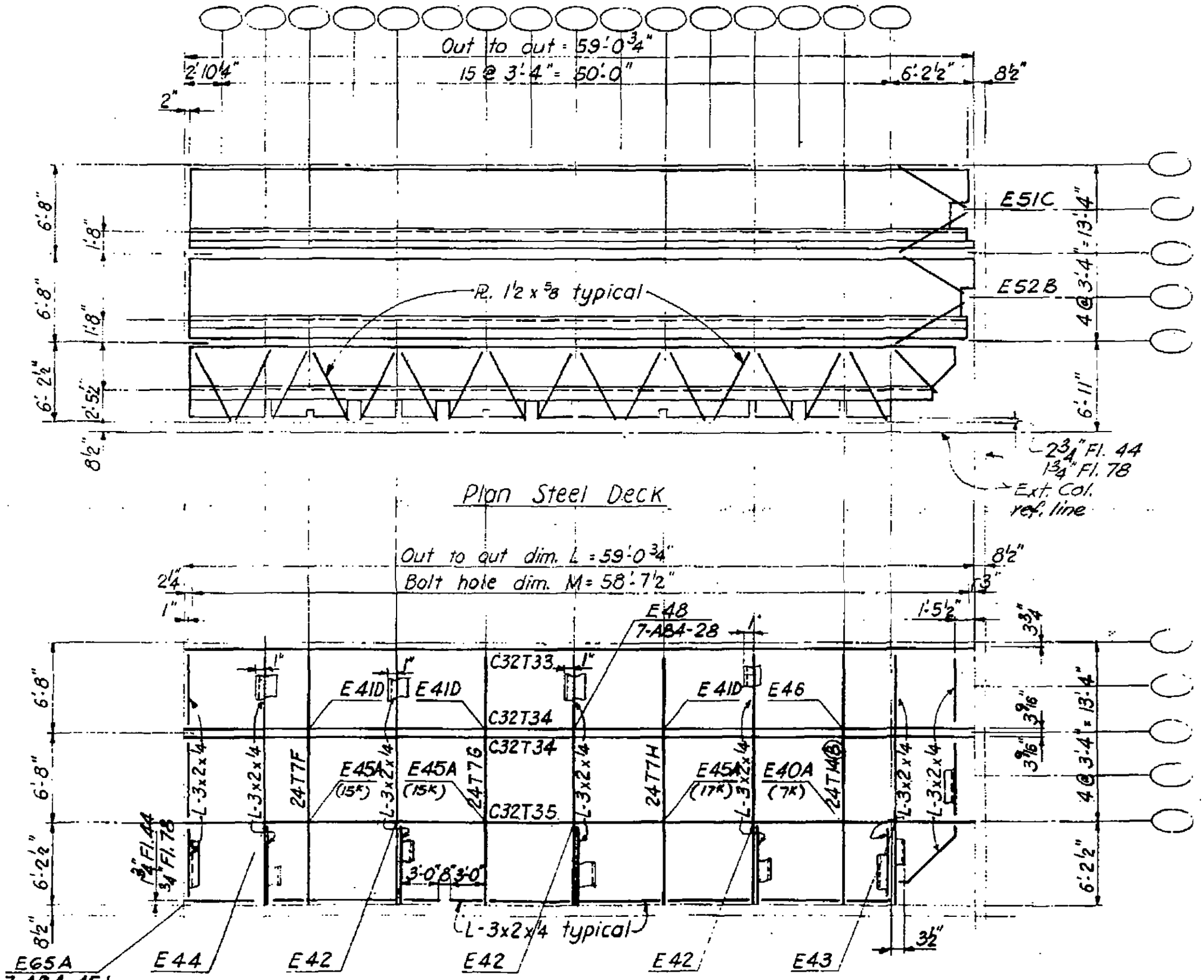

LICENSED PROFESSIONAL ENGINEER
LESLIE E. ROBERTSON
No. 34360
UNIVERSITY OF THE STATE OF NEW YORK

7-AB3-51

SKILLING - HELLE - CHRISTIANSEN - ROBERTSON Structural & Civil Engineers

PROJECT THE WORLD TRADE CENTER | TITLE FLOOR PANEL FR3 | DATE 1-6-69

REVISIONS

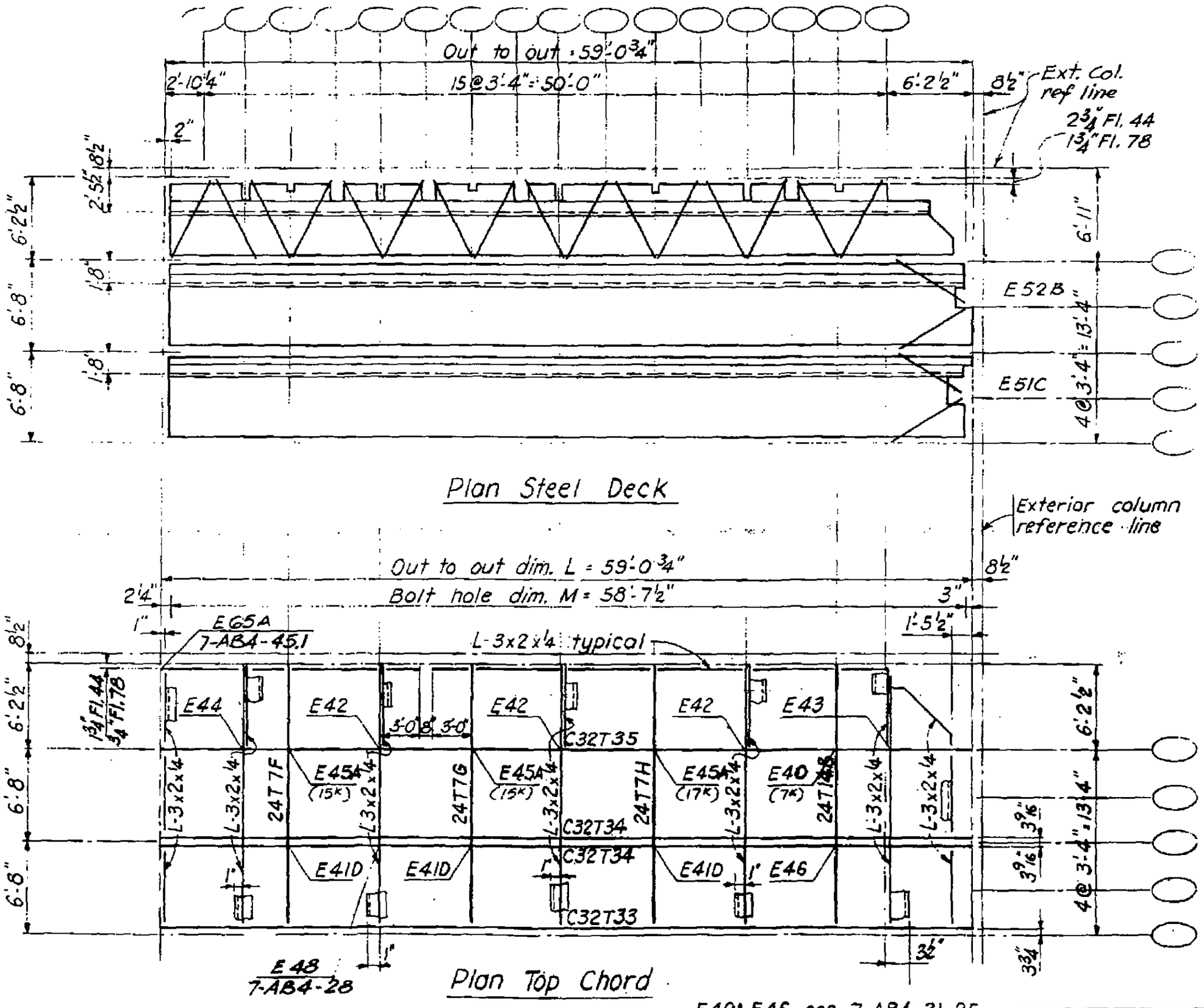

LICENSED PROFESSIONAL ENGINEER
LESLIE E. ROBERTSON
No. 34360
STATE OF NEW YORK

7-AB3-52

SKILLING, HELLE, CHRISTIANSEN, ROBERTSON — Structural & Civil Engineers

PROJECT: THE WORLD TRADE CENTER | TITLE: FLOOR PANEL A8 | DATE: 1-6-69

REVISIONS

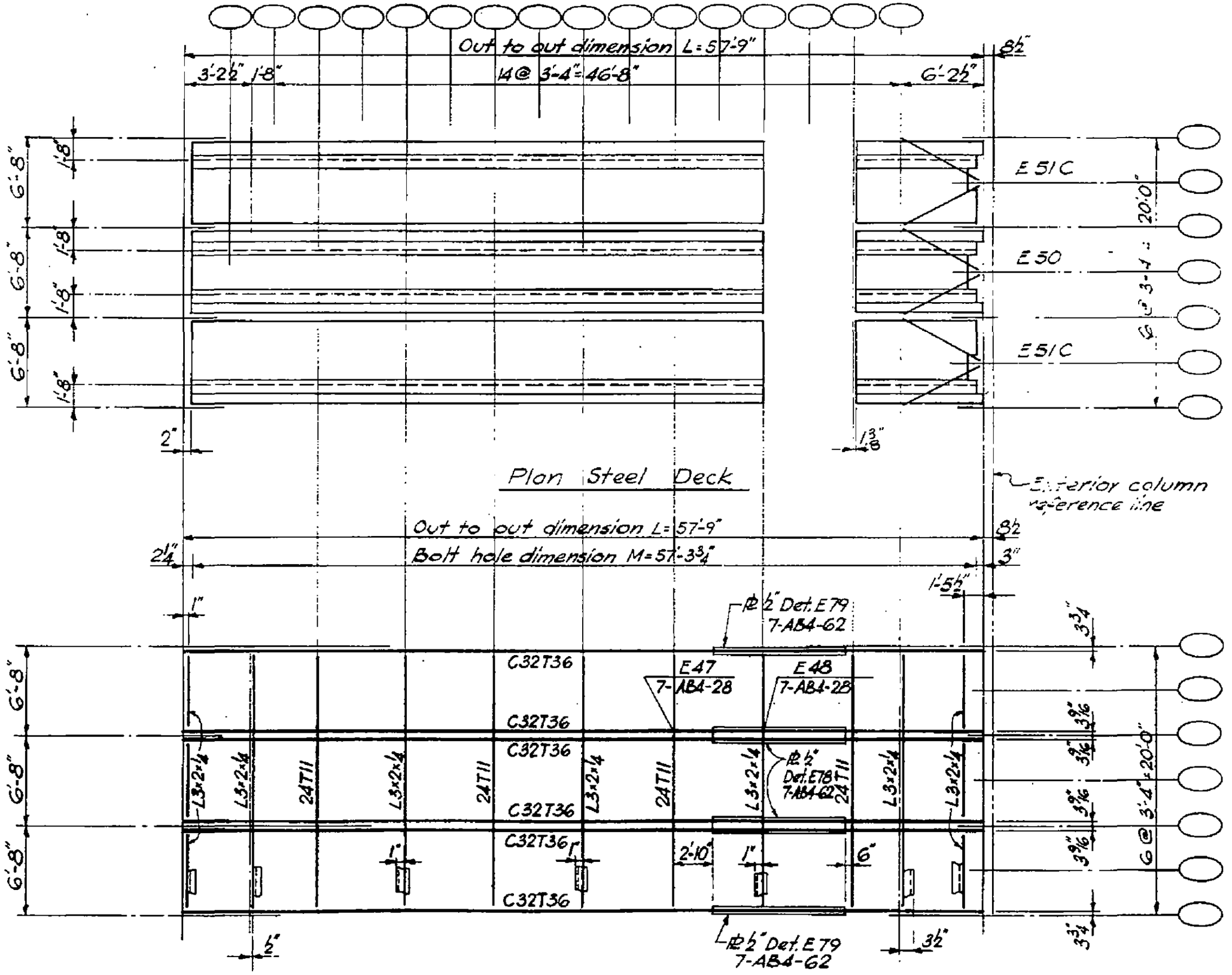

LICENSED PROFESSIONAL ENGINEER — LESLIE E. ROBERTSON — No. 34360 — UNIVERSITY OF THE STATE OF NEW YORK

DESIGNED

DRAWN

REVIEWED

7-AB3-53

SKILLING, HELLE, CHRISTIANSEN, ROBERTSON — Structural & Civil Engineers

PROJECT THE WORLD TRADE CENTER | TITLE FLOOR PANEL B8 | DATE 1-6-69

REVISIONS

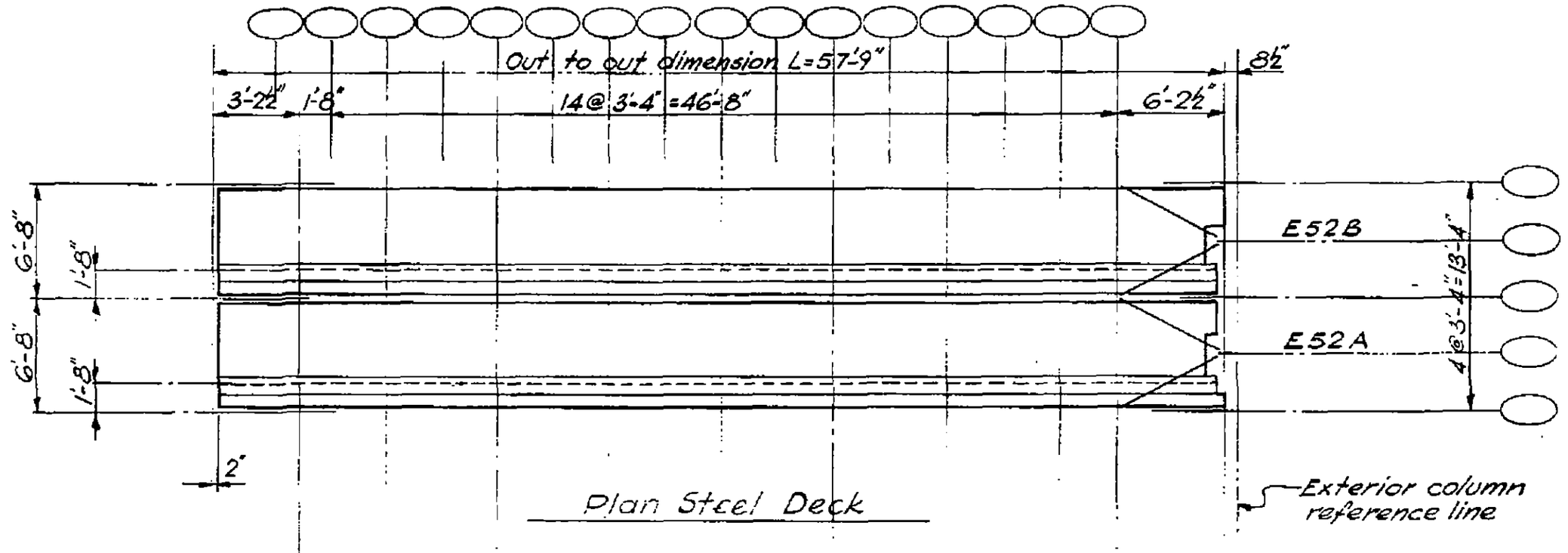

Plan Steel Deck

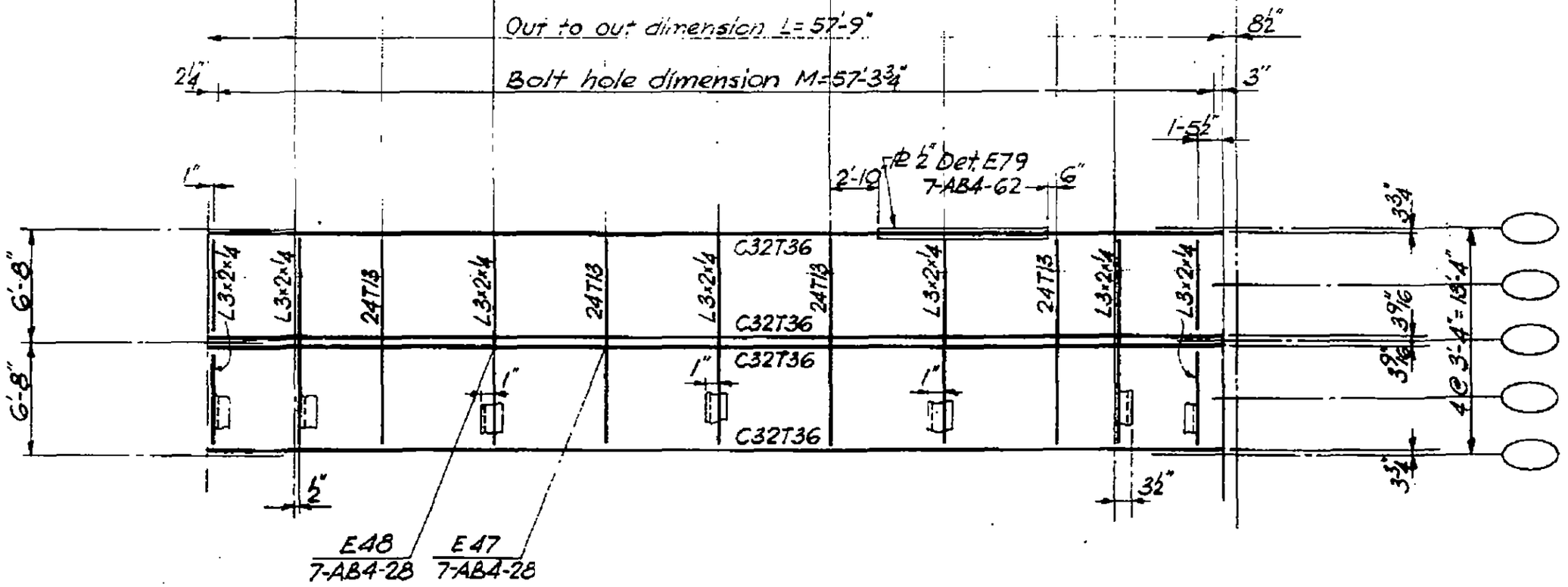

Plan Top Chord

LICENSED PROFESSIONAL ENGINEER — LESLIE E. ROBERTSON — No. 34360 — UNIVERSITY OF THE STATE OF NEW YORK

DESIGNED

DRAWN

REVIEWED

7-AB3-54

38

SKILLING, HELLE, CHRISTIANSEN, ROBERTSON — Structural & Civil Engineers

PROJECT THE WORLD TRADE CENTER | TITLE FLOOR PANEL BR8 | DATE 1-6-69

REVISIONS

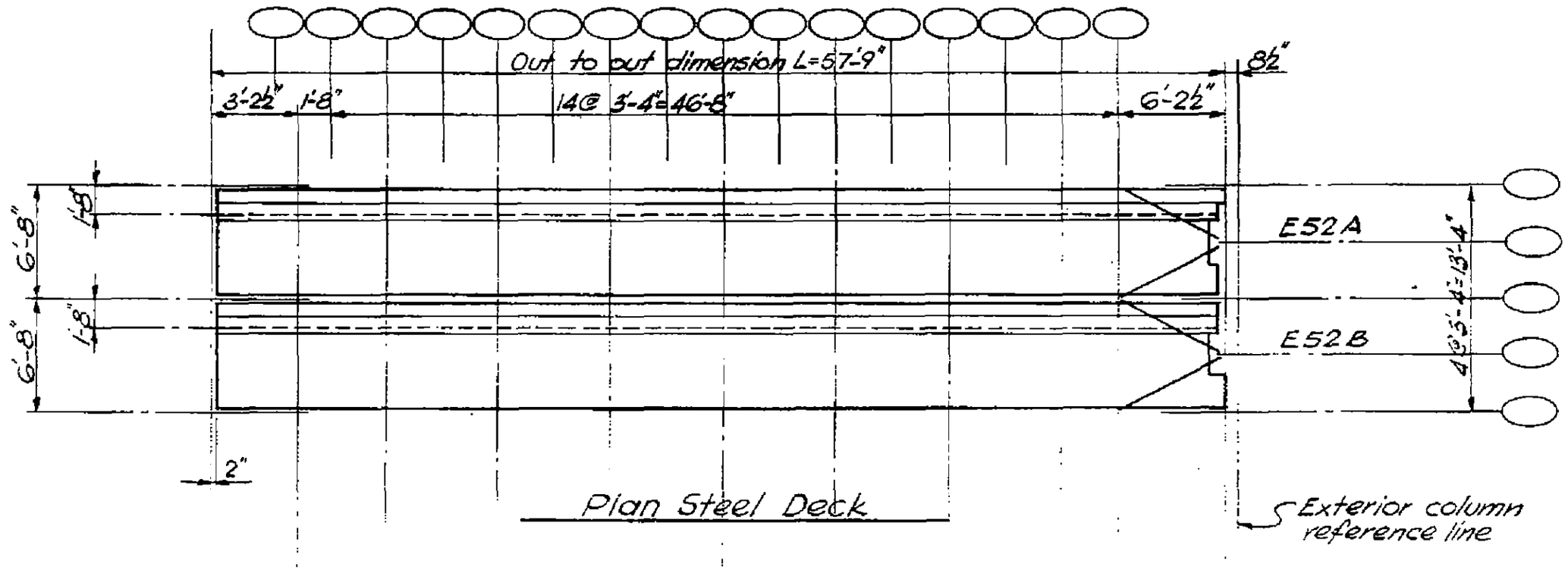

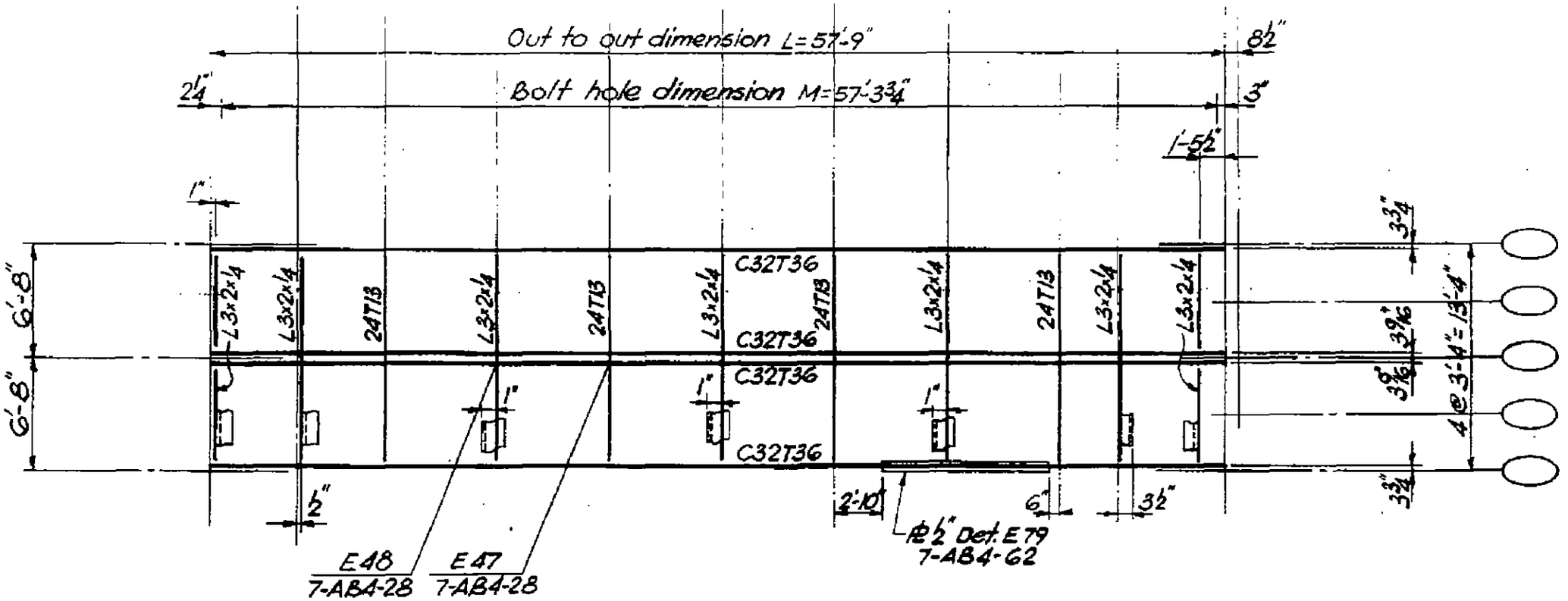

LICENSED PROFESSIONAL ENGINEER — LESLIE E. ROBERTSON — No. 34360 — UNIVERSITY OF THE STATE OF NEW YORK

DESIGNED

DRAWN

REVIEWED

7-AB3-55

39

SKILLING, HELLE, CHRISTIANSEN, ROBERTSON — Structural & Civil Engineers

PROJECT THE WORLD TRADE CENTER | TITLE FLOOR PANEL C8 | DATE 1-6-69

REVISIONS

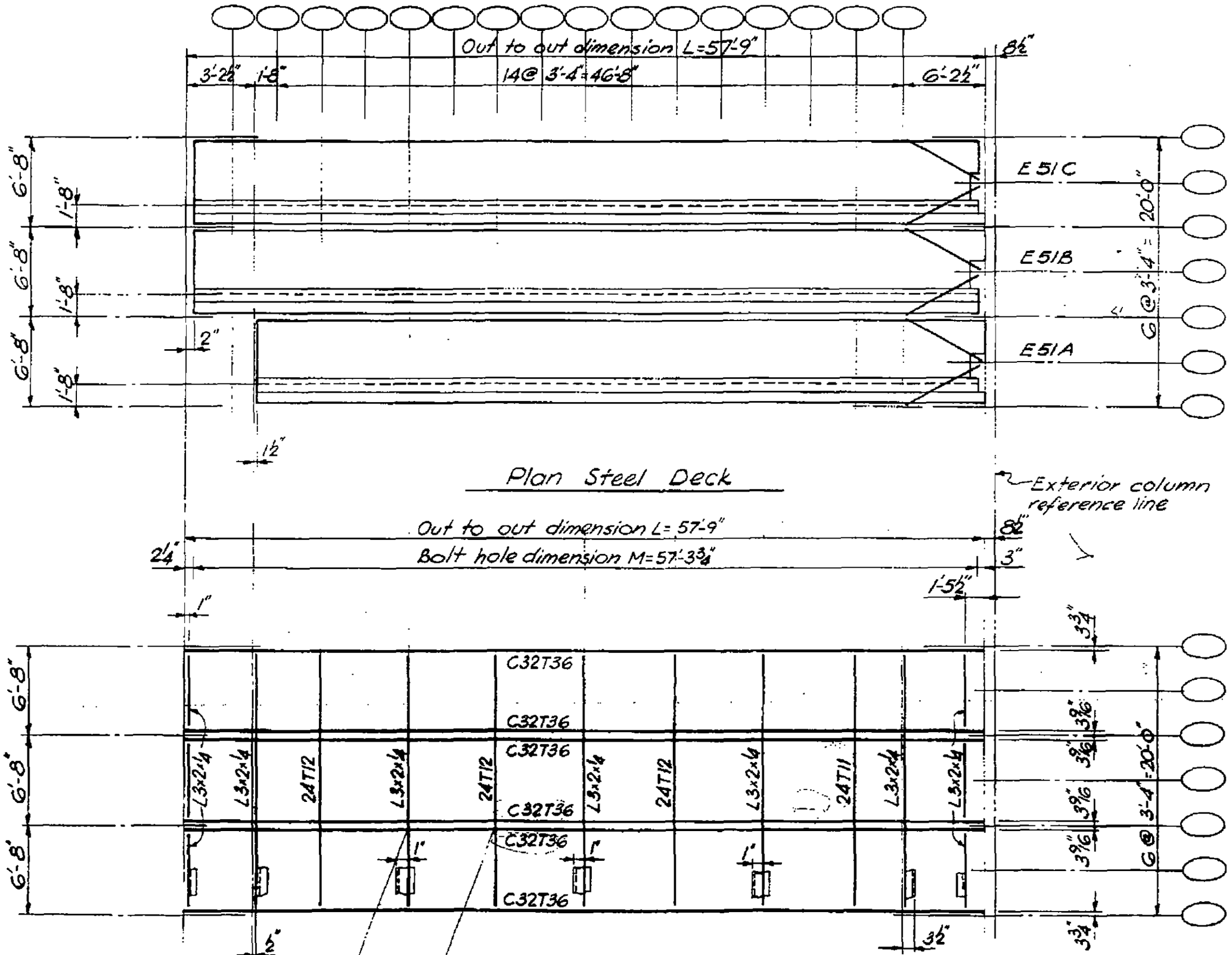

LICENSED PROFESSIONAL ENGINEER — LESLIE E. ROBERTSON — No. 34360 — UNIVERSITY OF THE STATE OF NEW YORK

DESIGNED

DRAWN

REVIEWED

40

7-AB3-56

SKILLING, HELLE, CHRISTIANSEN, ROBERTSON — Structural & Civil Engineers

PROJECT: THE WORLD TRADE CENTER | TITLE: FLOOR PANEL CR8 | DATE: 1-6-69

REVISIONS

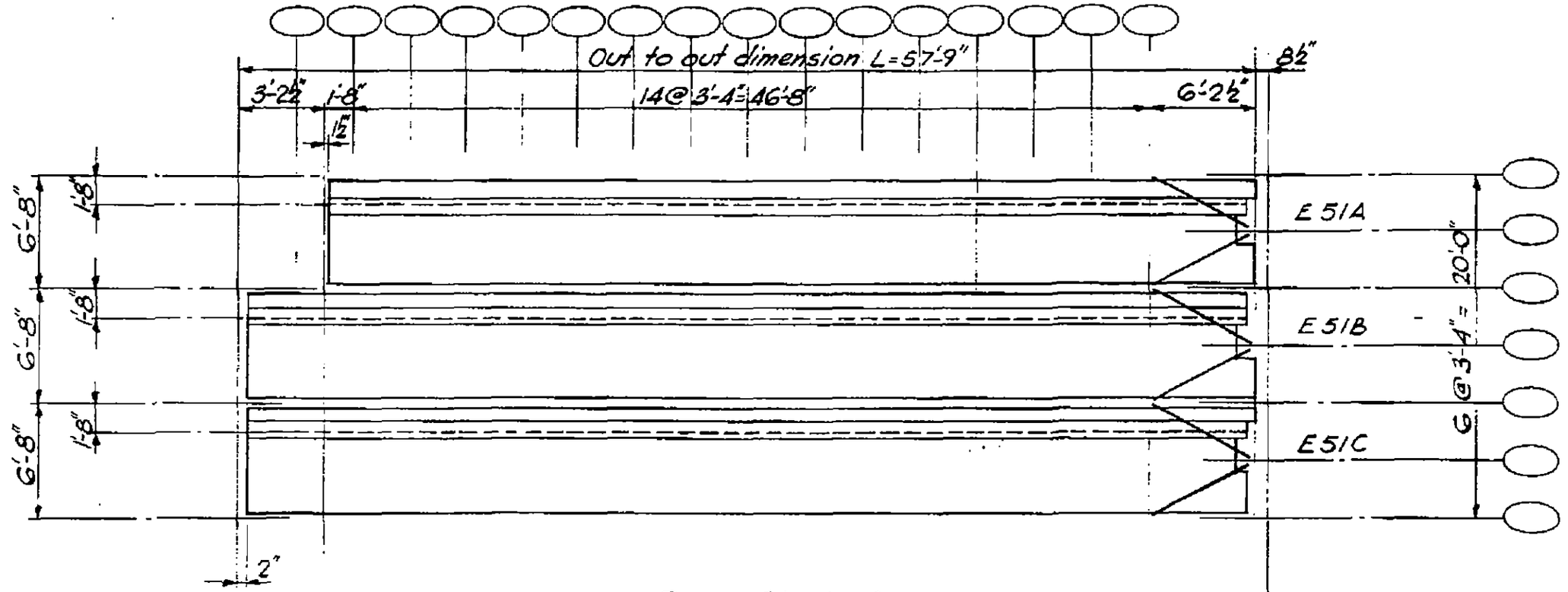

Plan Steel Deck

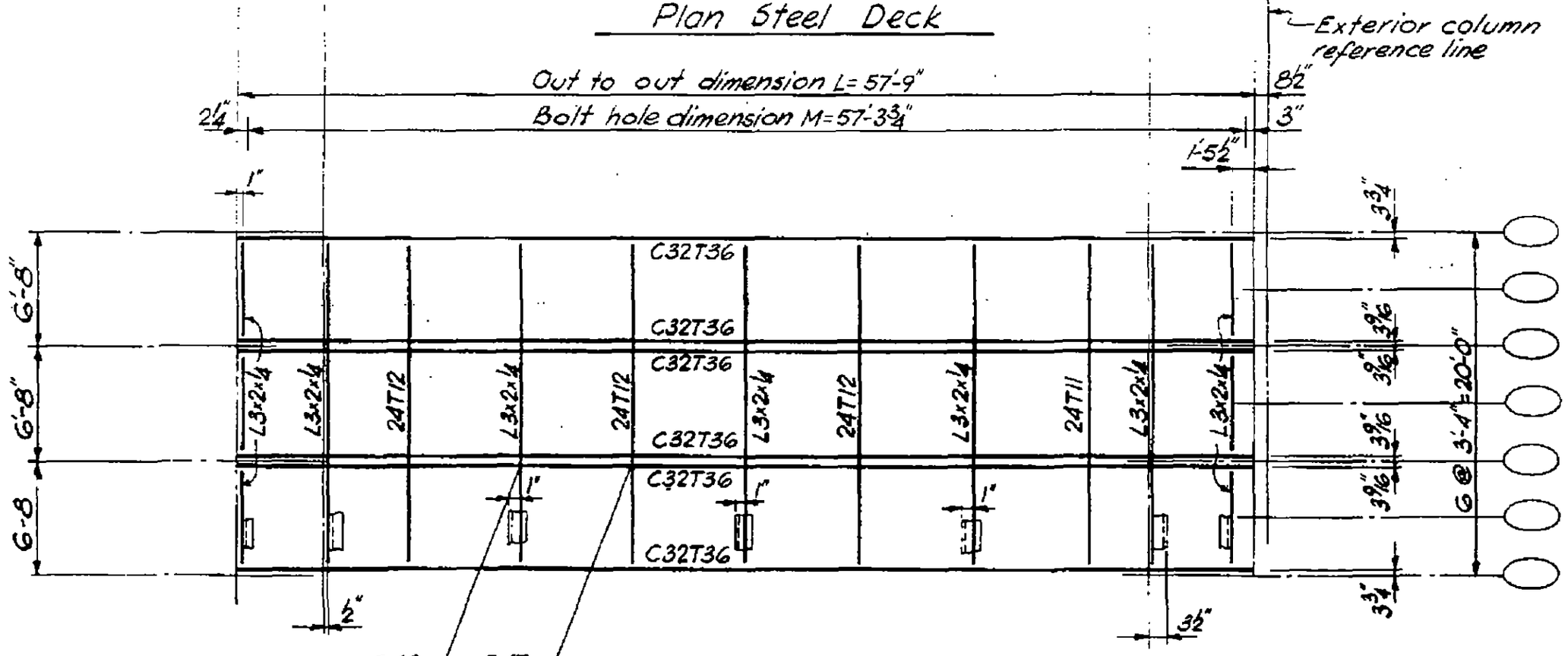

Plan Top Chord

LICENSED PROFESSIONAL ENGINEER — LESLIE E. ROBERTSON — No. 34960 — UNIVERSITY OF THE STATE OF NEW YORK

DESIGNED

DRAWN

REVIEWED

7-AB3-57

4

SKILLING, HELLE, CHRISTIANSEN, ROBERTSON — Structural & Civil Engineers

PROJECT: THE WORLD TRADE CENTER | TITLE: FLOOR PANEL D8 | DATE: 1-6-69

REVISIONS

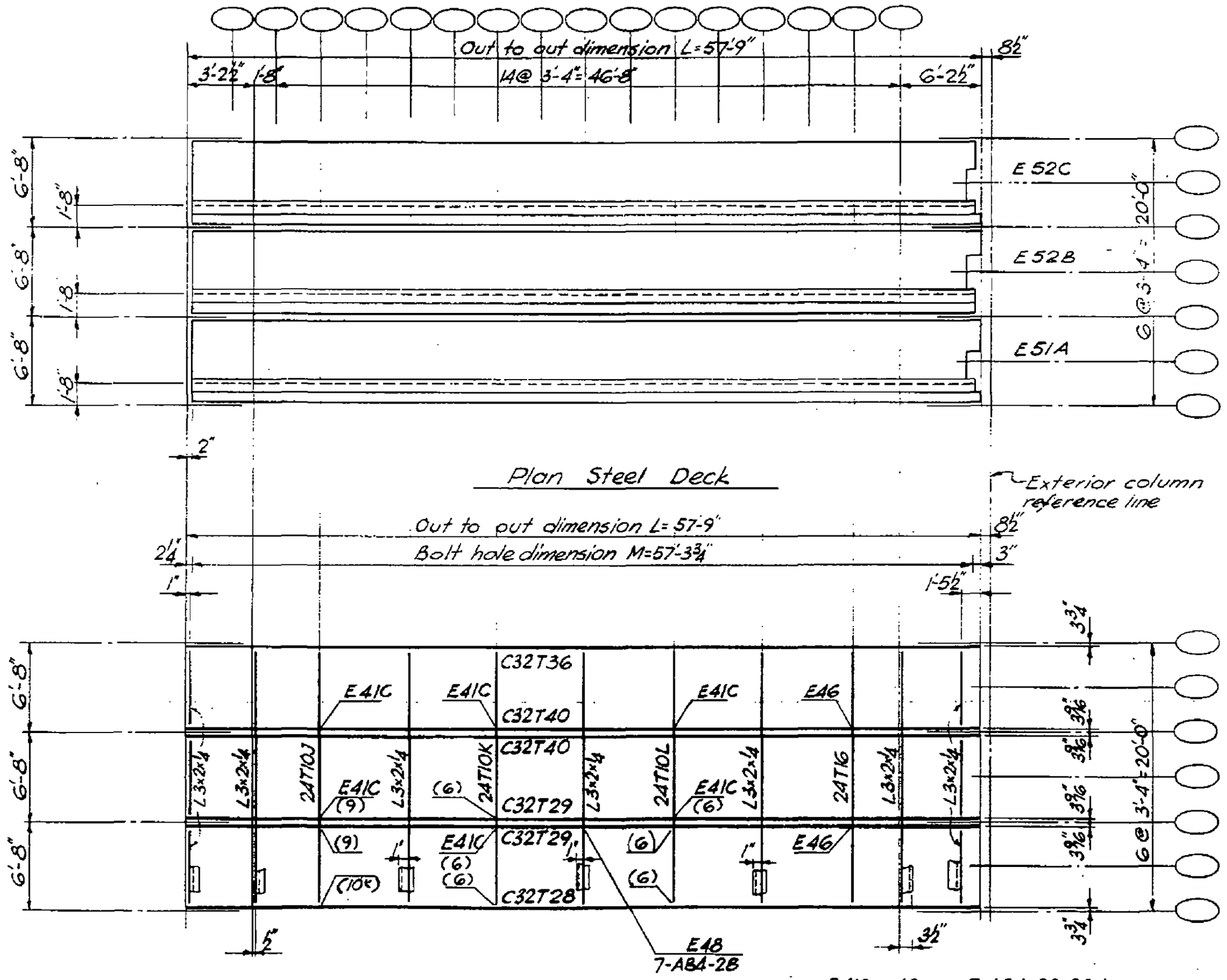

LICENSED PROFESSIONAL ENGINEER — LESLIE E. ROBERTSON — No. 34360 — UNIVERSITY OF THE STATE OF NEW YORK

DESIGNED

DRAWN

REVIEWED

7-AB3-58

SKILLING, HELLE, CHRISTIANSEN, ROBERTSON — Structural & Civil Engineers

PROJECT: THE WORLD TRADE CENTER | TITLE: FLOOR PANEL DR8 | DATE: 1-6-69

REVISIONS

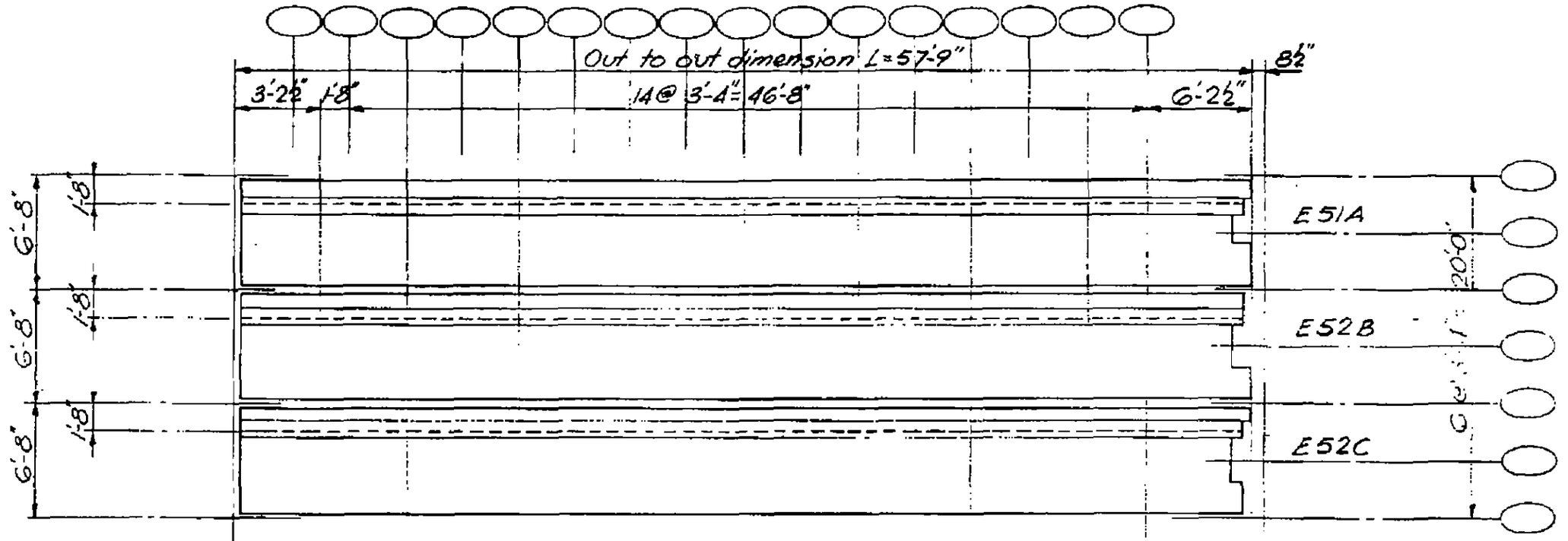

Plan Steel Deck

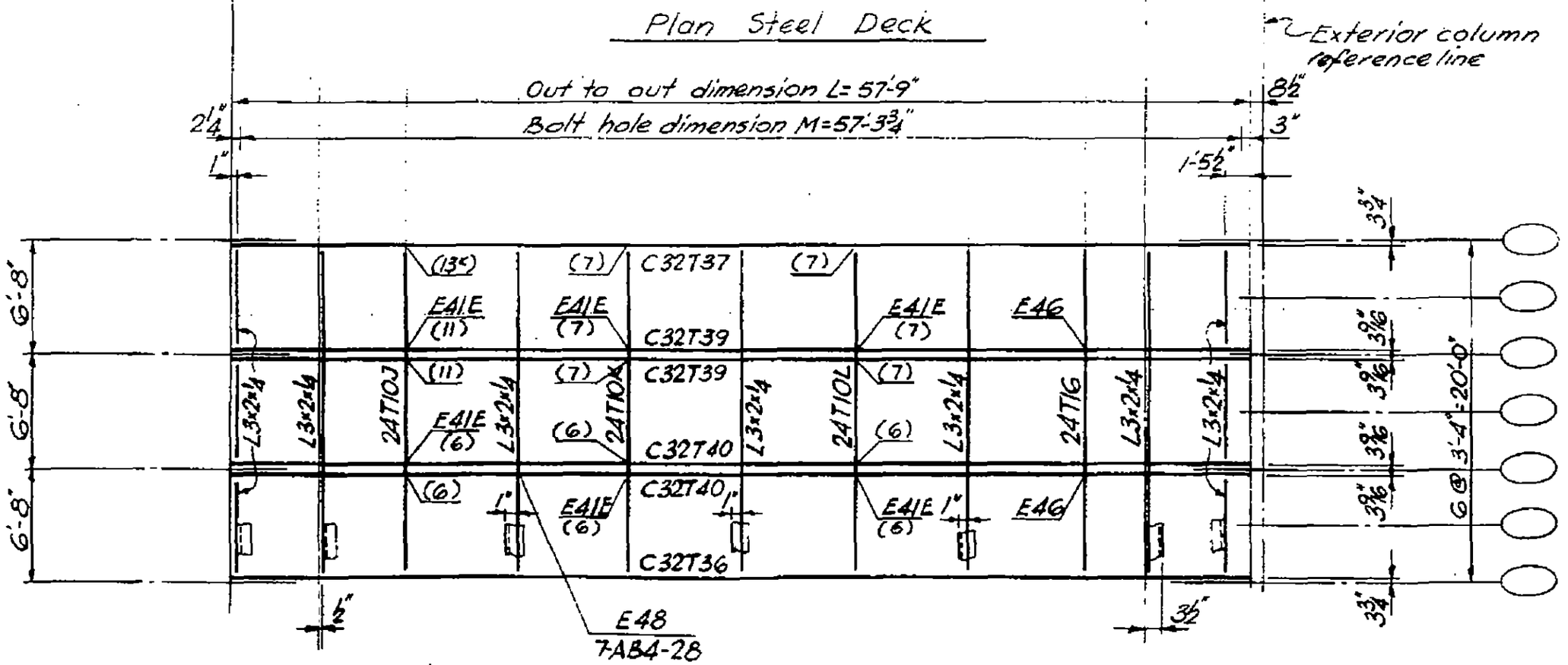

E41E, E46 see dwg. 7-AB4-22, 22.1

Plan Top Chord

LICENSED PROFESSIONAL ENGINEER — LESLIE E. ROBERTSON — No. 34360 — UNIVERSITY OF THE STATE OF NEW YORK

DESIGNED

DRAWN

REVIEWED

V3

7-AB3-59

SKILLING, HELLE, CHRISTIANSEN, ROBERTSON — Structural & Civil Engineers

PROJECT: THE WORLD TRADE CENTER | TITLE: FLOOR PANEL E8 | DATE: 1-6-69

REVISIONS

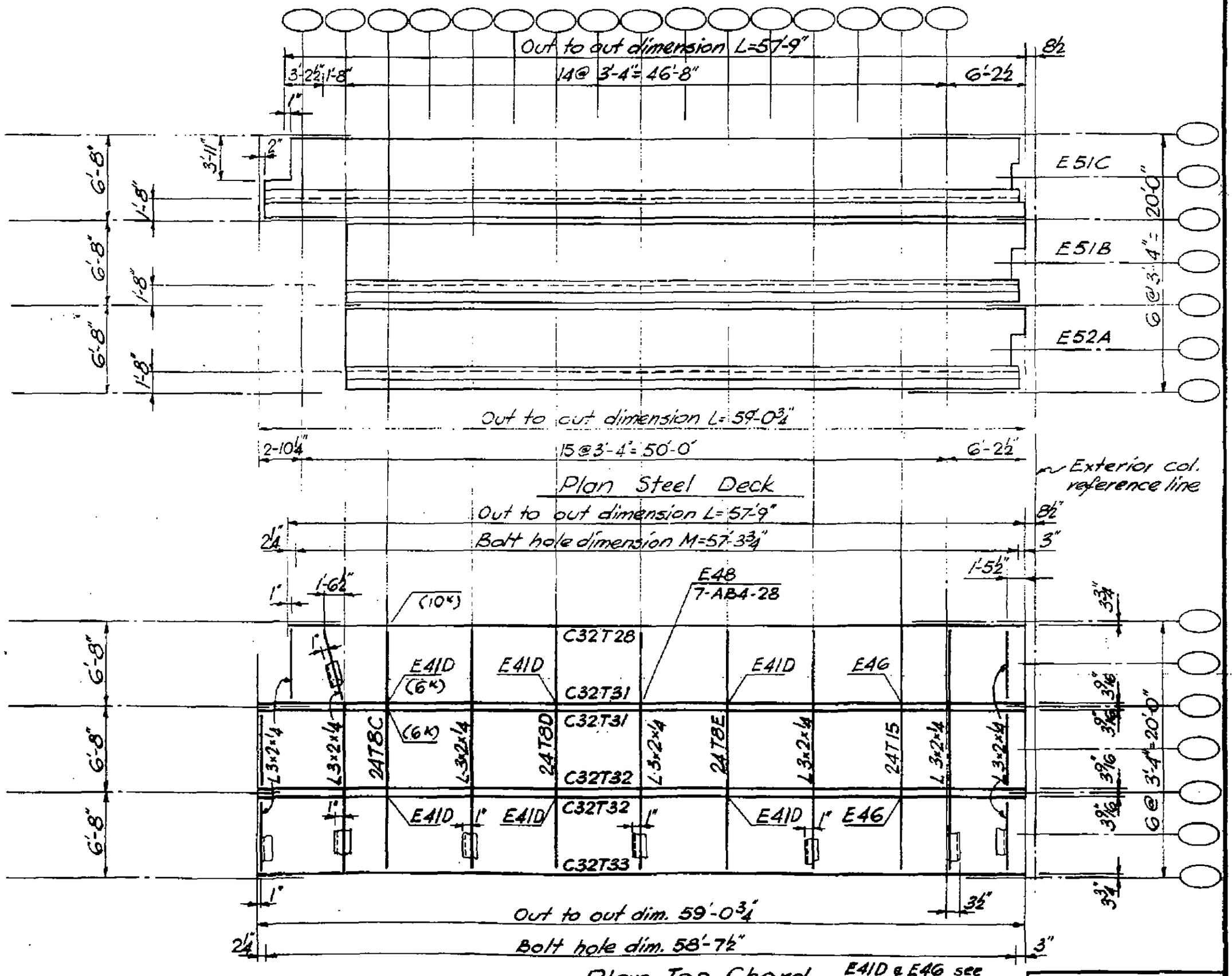

LICENSED PROFESSIONAL ENGINEER — LESLIE E. ROBERTSON — No. 34360 — UNIVERSITY OF THE STATE OF NEW YORK

DESIGNED

DRAWN

REVIEWED

7-AB3-60

SKILLING, HELLE, CHRISTIANSEN, ROBERTSON — Structural & Civil Engineers

PROJECT: THE WORLD TRADE CENTER | TITLE: FLOOR PANEL ER8 | DATE: 1-6-69

REVISIONS

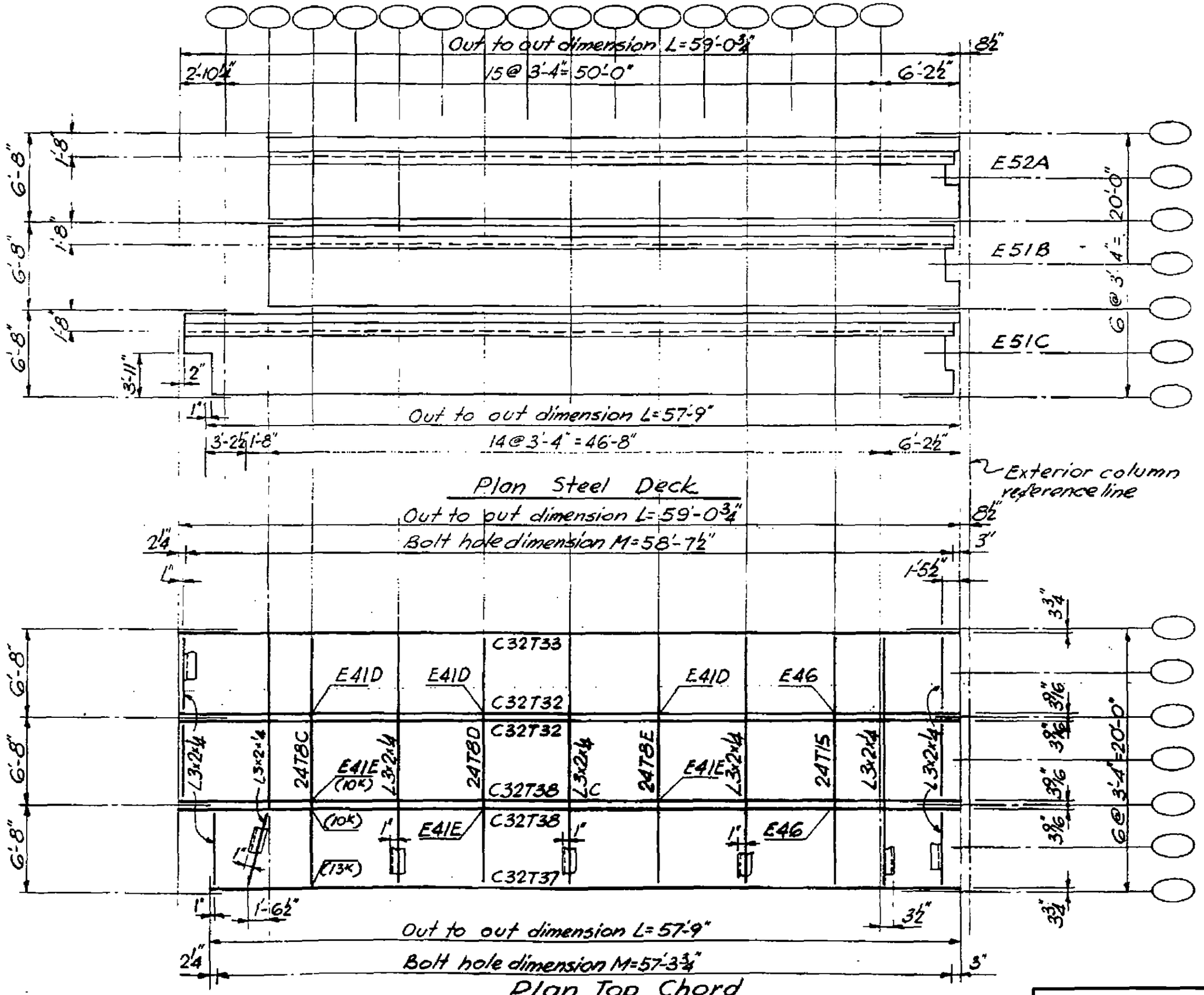

LICENSED PROFESSIONAL ENGINEER — LESLIE E. ROBERTSON — No. 34360 — UNIVERSITY OF THE STATE OF NEW YORK

DESIGNED

DRAWN

REVIEWED

7-AB3-61

SKILLING, HELLE, CHRISTIANSEN, ROBERTSON — Structural & Civil Engineers

PROJECT THE WORLD TRADE CENTER | TITLE FLOOR PANEL F8 | DATE 1-20-69

REVISIONS

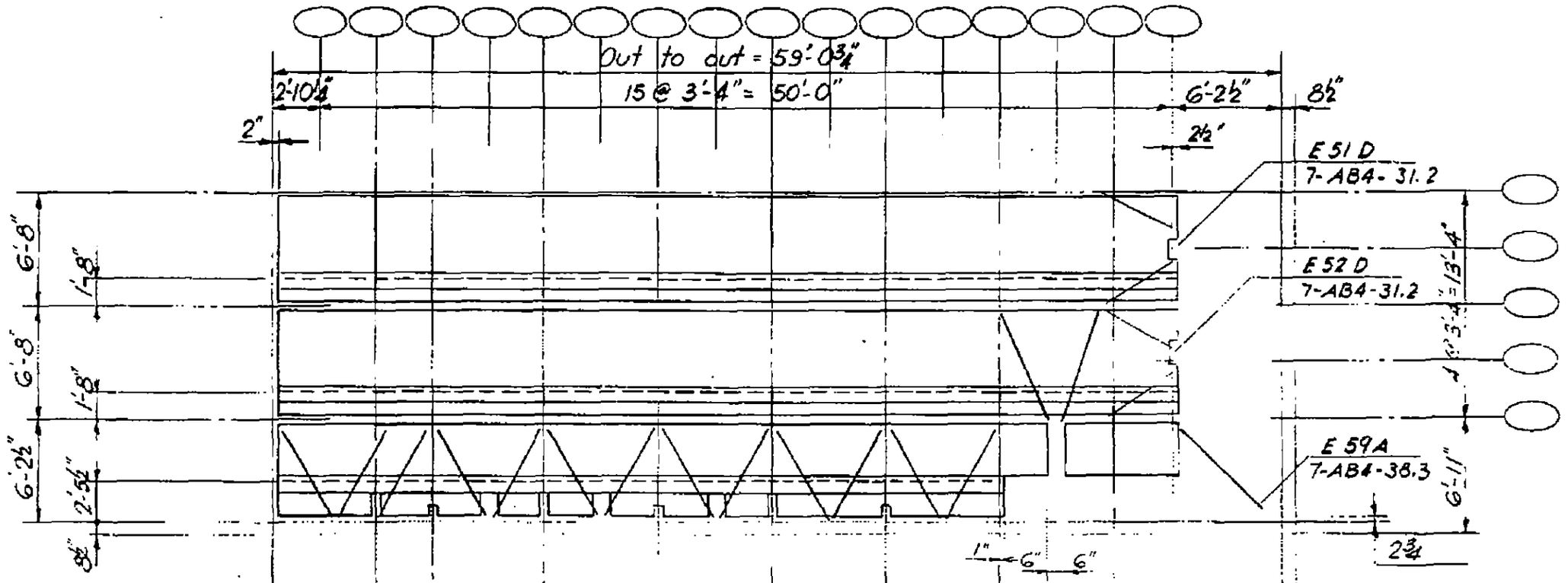

Plan Steel Deck

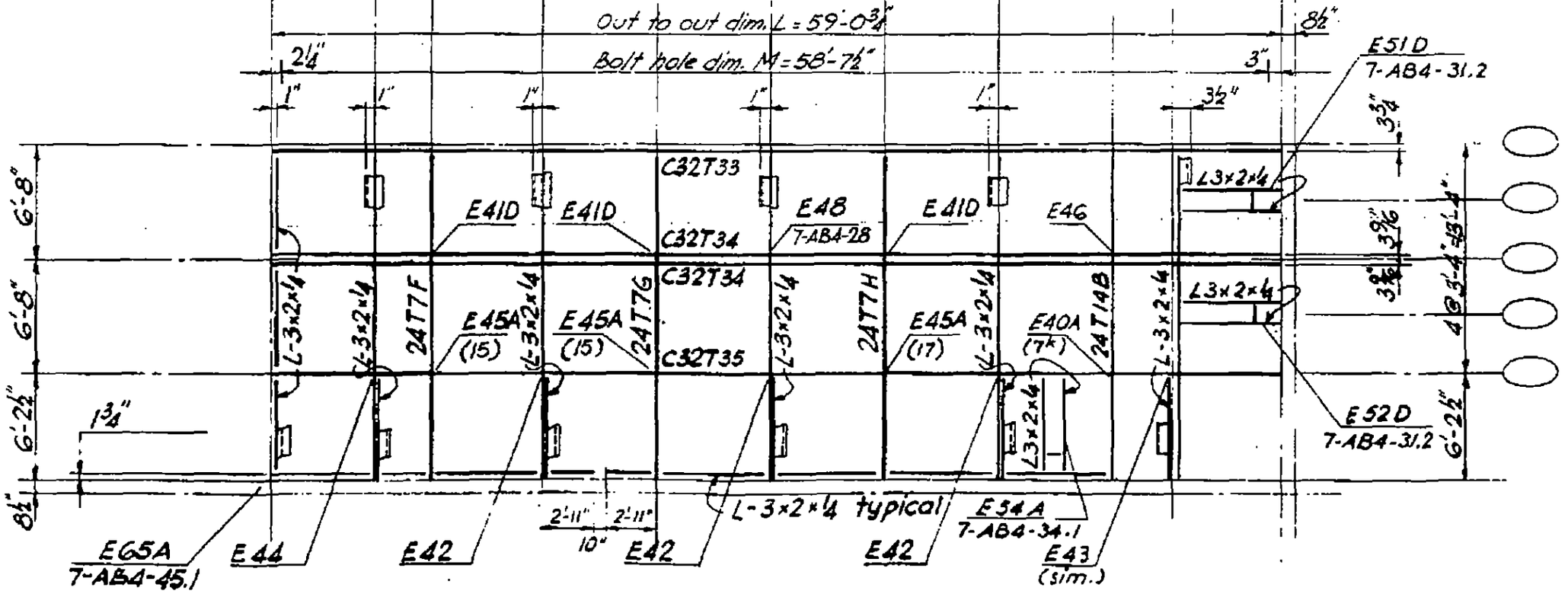

E40A - E46 see 7-AB4-21-25

Plan Top Chord

7-AB3-62

LICENSED PROFESSIONAL ENGINEER
LESLIE E. ROBERTSON
No. 34360
UNIVERSITY OF THE STATE OF NEW YORK

DESIGNED

DRAWN

REVIEWED

SKILLING, HELLE, CHRISTIANSEN, ROBERTSON — Structural & Civil Engineers

PROJECT: THE WORLD TRADE CENTER | TITLE: FLOOR PANEL FR8 | DATE: 1-20-69

REVISIONS

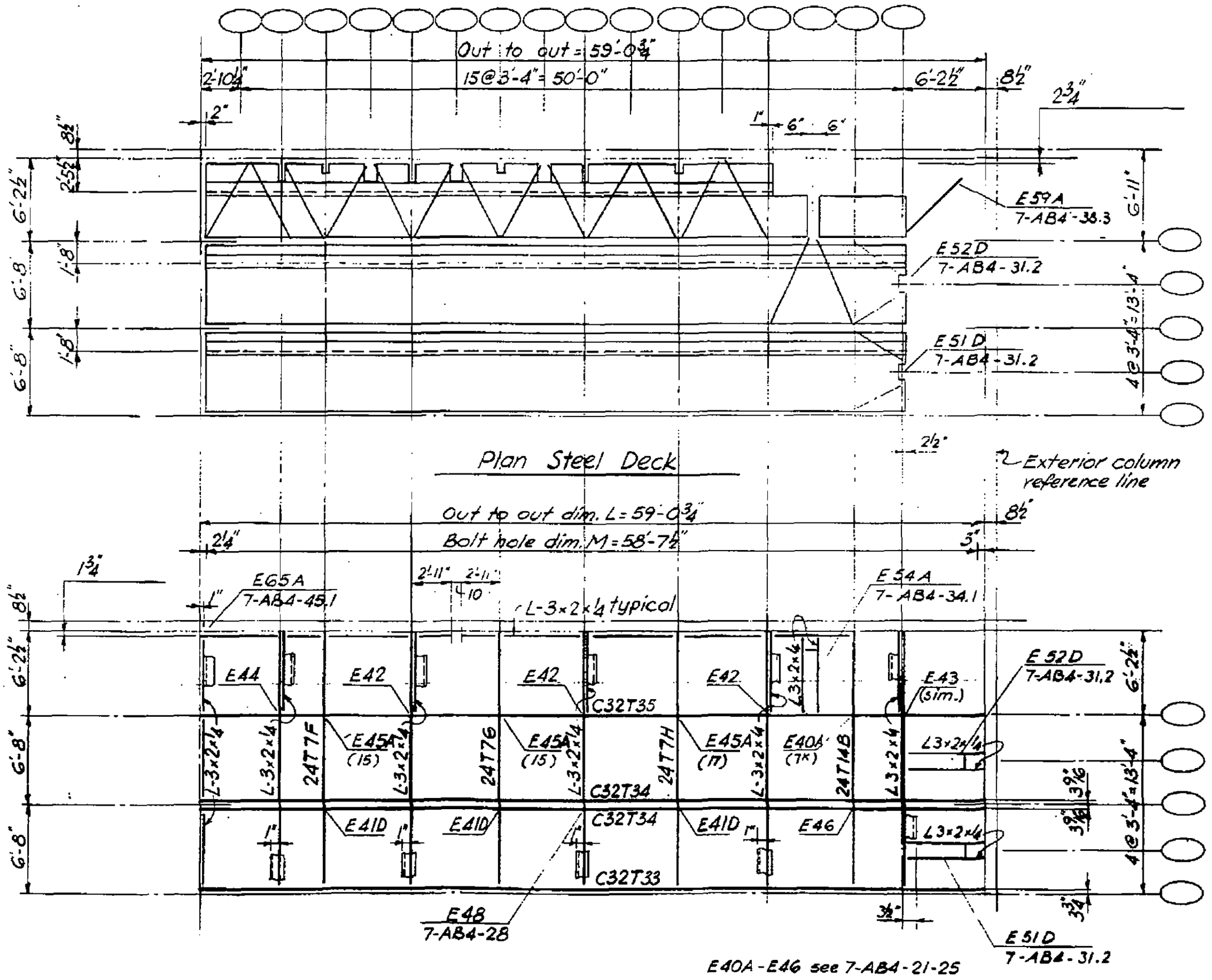

LICENSED PROFESSIONAL ENGINEER — LESLIE E. ROBERTSON — No. 34360 — UNIVERSITY OF THE STATE OF NEW YORK

DESIGNED

DRAWN

REVIEWED

7-AB3-63

SKILLING, HELLE, CHRISTIANSEN, ROBERTSON — Structural & Civil Engineers

PROJECT THE WORLD TRADE CENTER | TITLE FLOOR PANEL - DIMENSION SCHEDULE 5 | DATE 11-25-68

REVISIONS

PANEL NO.				OUT TO OUT PANEL DIM. L	BOLT HOLE DIMENSION M	DIMENSION A
D5A	DR5A	E5A	ER5A	59' - 9"	59' - 3¾"	5'-2½"
D5B	DR5B	E5B	ER5B	59' - 8½"	59' - 3¼"	5'-2"
D5C	DR5C	E5C	ER5C	59' - 8"	59' - 2¾"	5'-1½"
D5D	DR5D	E5D	ER5D	59' - 5"	58' - 11¾"	4'-10½"
D5E	DR5E	E5E	ER5E	59' - 3"	58' - 9¾"	4'-8½"
D5F	DR5F	E5F	ER5F	59' - 2"	58' - 8¾"	4'-7½"
D5G	DR5G	E5G	ER5G	58' - 11"	58' - 5¾"	4'-4½"
D5H	DR5H	E5H	ER5H	58' - 8"	58' - 2¾"	4'-1½"
D5J	DR5J	E5J	ER5J	58' - 7"	58' - 1¾"	4'-0½"
D5K	DR5K	E5K	ER5K	58' - 6"	58' - 0¾"	3'-11½"
D5M	DR5M	E5M	ER5M	58' - 3"	57' - 9¾"	3'-8½"
D5N	DR5N	E5N	ER5N	57' - 9"	57' - 3¾"	3'-2½"
D5P	DR5P	E5P	ER5P	57' - 7"	57' - 1¾"	3'-0½"

LICENSED PROFESSIONAL ENGINEER
LESLIE E. ROBERTSON
No. 34360
UNIVERSITY OF THE STATE OF NEW YORK

DESIGNED

DRAWN

REVIEWED

7-AB3-70

SKILLING - HELLE - CHRISTIANSEN - ROBERTSON Structural & Civil Engineers

PROJECT THE WORLD TRADE CENTER | TITLE FLOOR PANEL D5 | DATE 11-25-68

REVISIONS

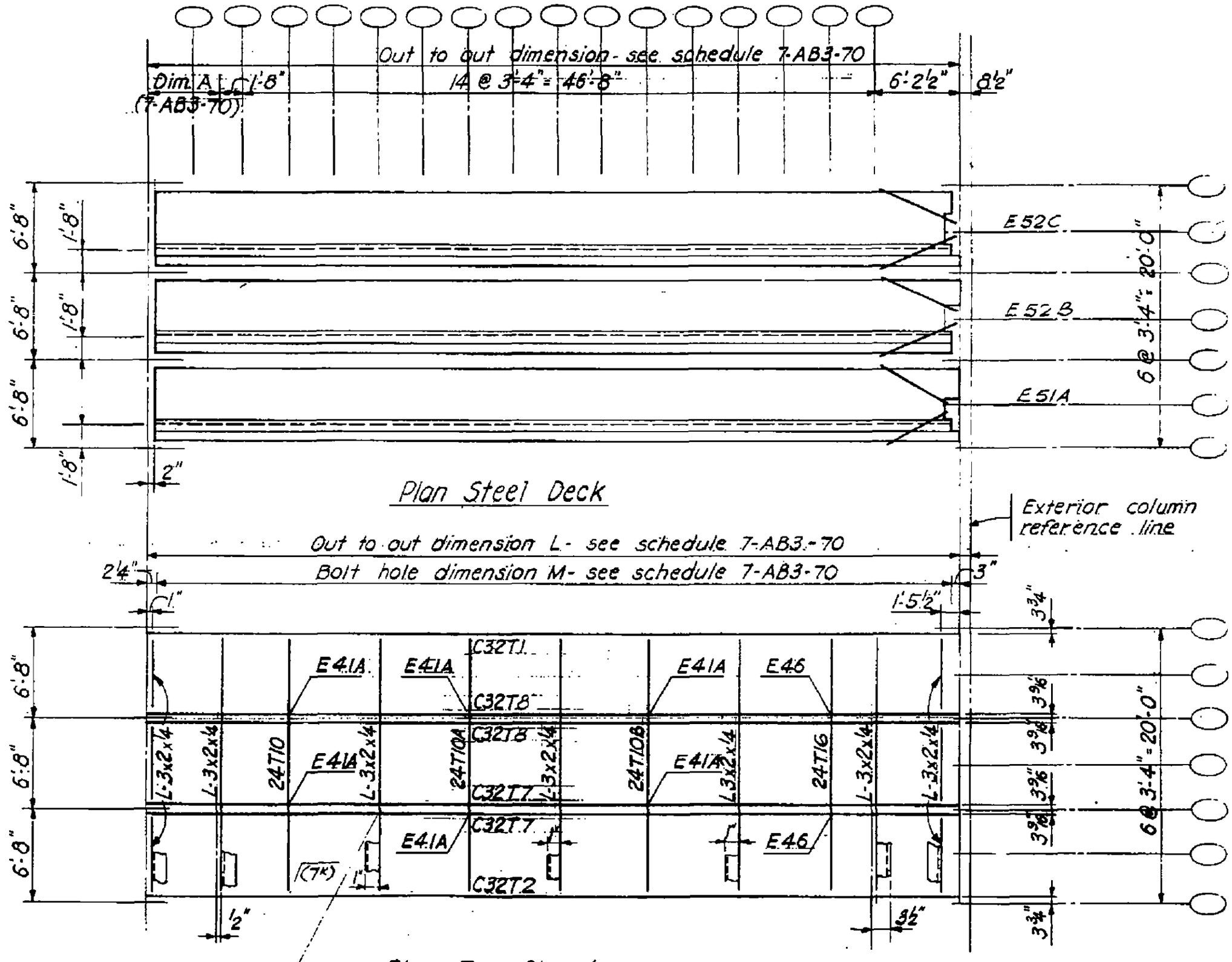

LICENSED PROFESSIONAL ENGINEER
LESLIE E. ROBERTSON
No. 34360
UNIVERSITY OF THE STATE OF NEW YORK

7-AB3-71

SKILLING - HELLE - CHRISTIANSEN - ROBERTSON Structural & Civil Engineers

PROJECT THE WORLD TRADE CENTER | TITLE FLOOR PANEL DR5 | DATE 11-25-68

REVISIONS

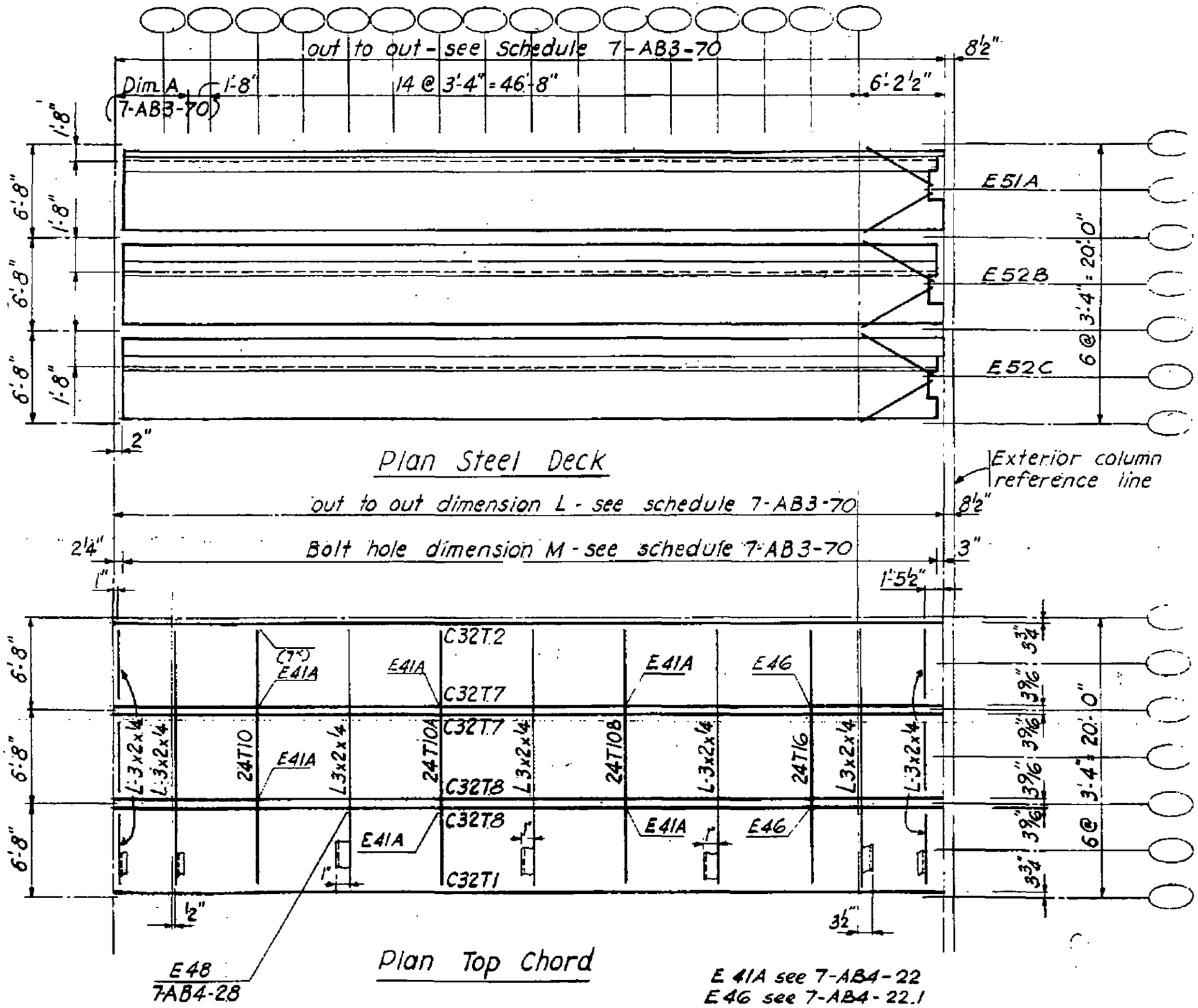

LICENSED PROFESSIONAL ENGINEER
LESLIE E. ROBERTSON
No. 34360
STATE OF NEW YORK

7-AB3-72

SKILLING - HELLE - CHRISTIANSEN - ROBERTSON Structural & Civil Engineers

PROJECT THE WORLD TRADE CENTER | TITLE FLOOR PANEL E5 | DATE 11-25-68

REVISIONS

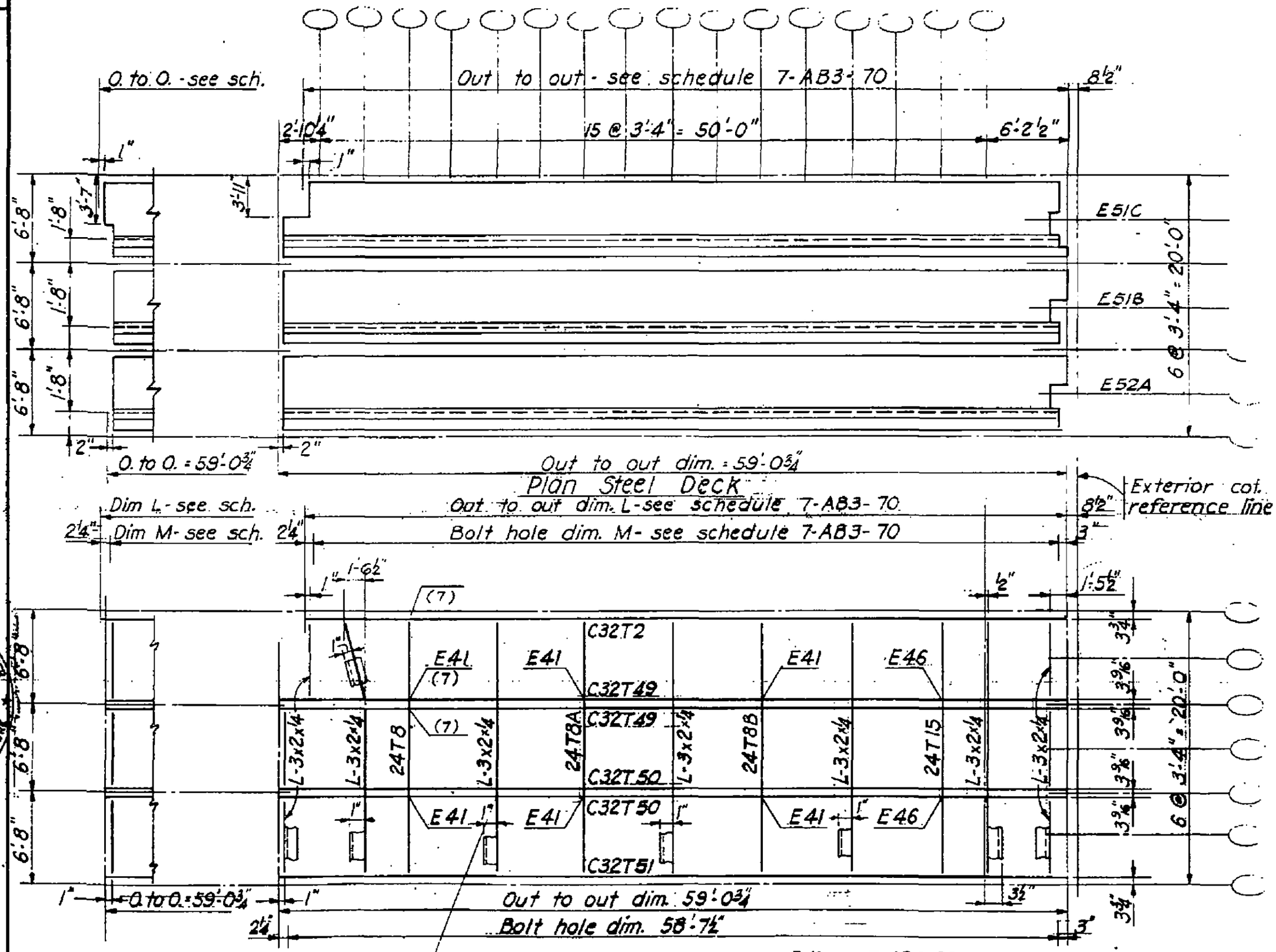

LICENSED PROFESSIONAL ENGINEER
LESLIE E. ROBERTSON
No. 34960
STATE OF NEW YORK

7-AB3-73

SKILLING - HELLE - CHRISTIANSEN - ROBERTSON Structural & Civil Engineers

PROJECT THE WORLD TRADE CENTER | TITLE FLOOR PANEL ER5 | DATE 11-25-68

REVISIONS

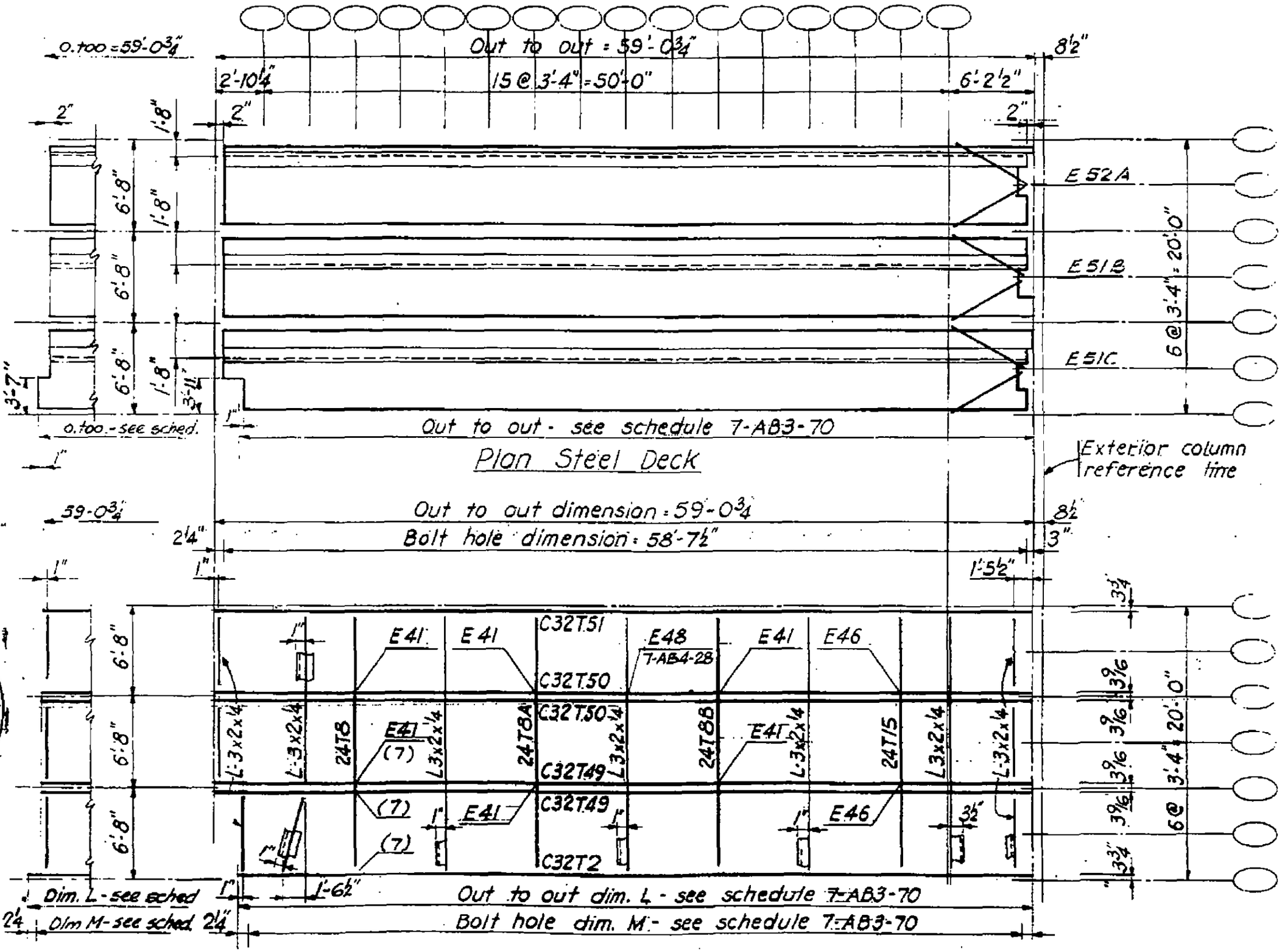

Plan Steel Deck

Plan Top Chord

E41 see 7-AB4-22
E46 see 7-AB4-22.1

7-AB3-74

LICENSED PROFESSIONAL ENGINEER
LESLIE E. ROBERTSON
No. 34360
UNIVERSITY OF THE STATE OF NEW YORK

SKILLING - HELLE - CHRISTIANSEN - ROBERTSON Structural & Civil Engineers

PROJECT THE WORLD TRADE CENTER | TITLE FLOOR PANEL F5 | DATE 11-25-68

REVISIONS

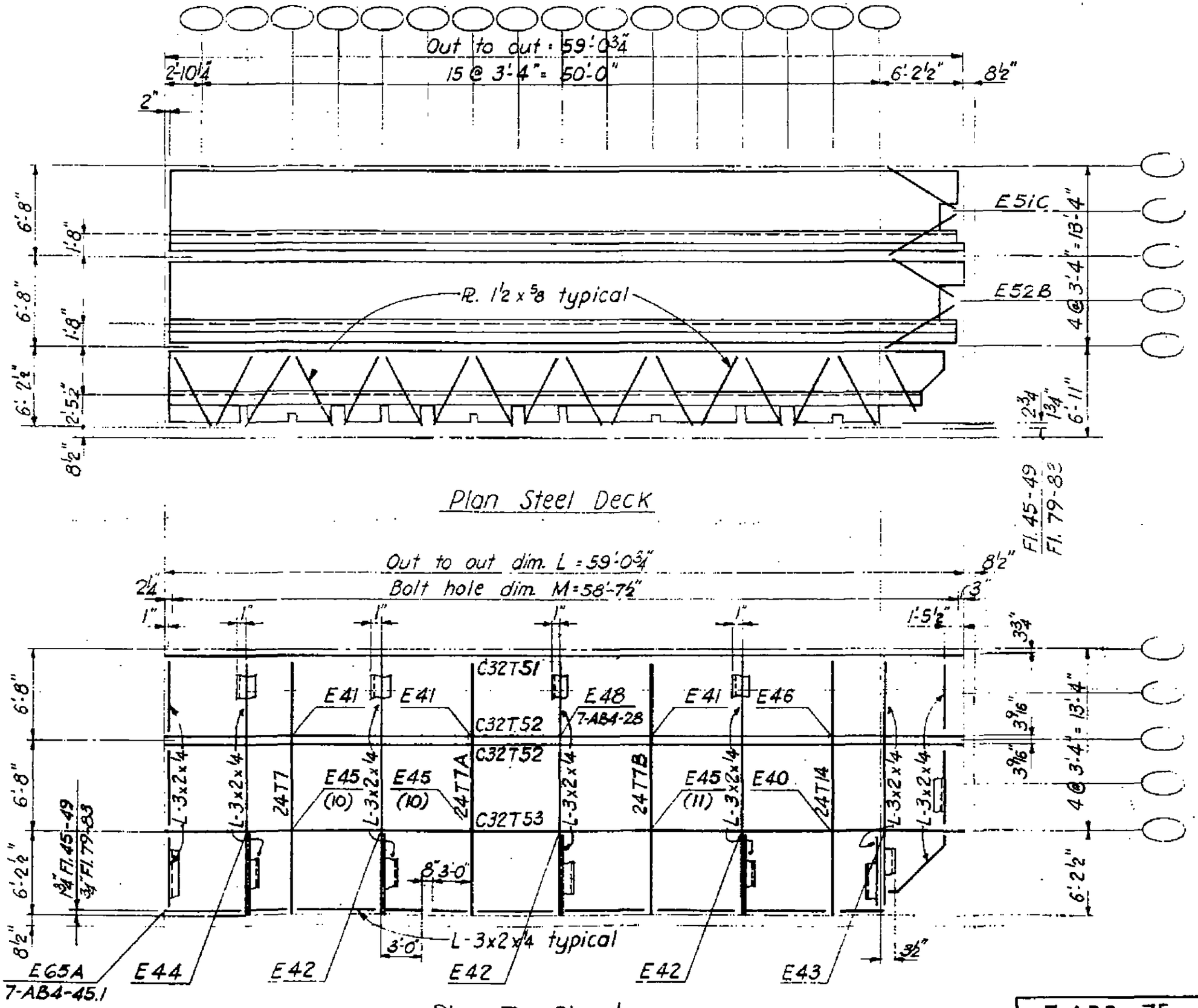

LICENSED PROFESSIONAL ENGINEER
LESLIE E. ROBERTSON
No. 34360
UNIVERSITY OF THE STATE OF NEW YORK

7-AB3 - 75

SKILLING - HELLE - CHRISTIANSEN - ROBERTSON Structural & Civil Engineers

PROJECT THE WORLD TRADE CENTER | TITLE FLOOR PANEL FR 5 | DATE 11-25-68

REVISIONS

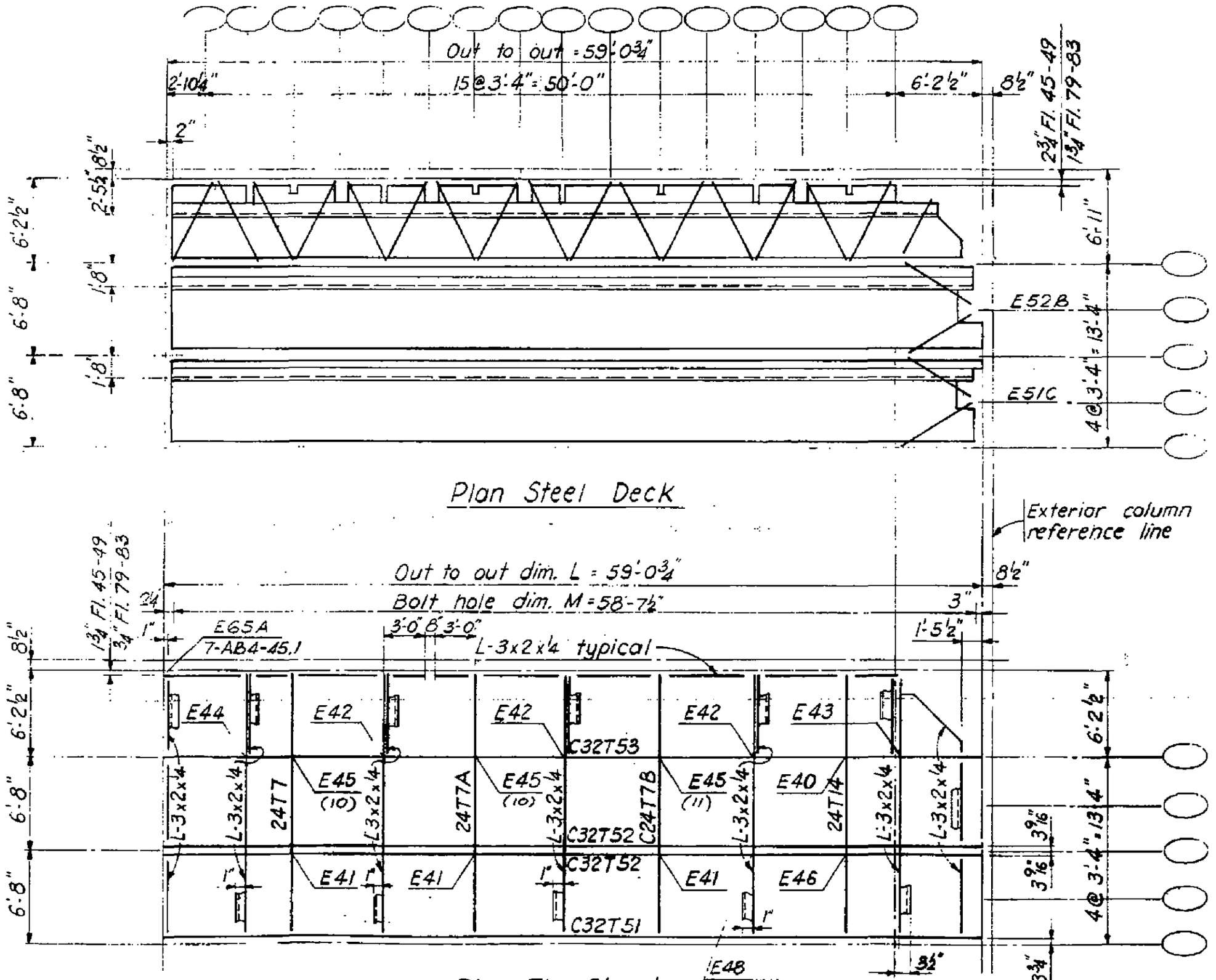

LICENSED PROFESSIONAL ENGINEER
LESLIE E. ROBERTSON
No. 34960
UNIVERSITY OF THE STATE OF NEW YORK

7-AB3-76

SKILLING, HELLE, CHRISTIANSEN, ROBERTSON — Structural & Civil Engineers

PROJECT: THE WORLD TRADE CENTER | TITLE: FLOOR PANEL C 6 | DATE: 1-6-69

REVISIONS

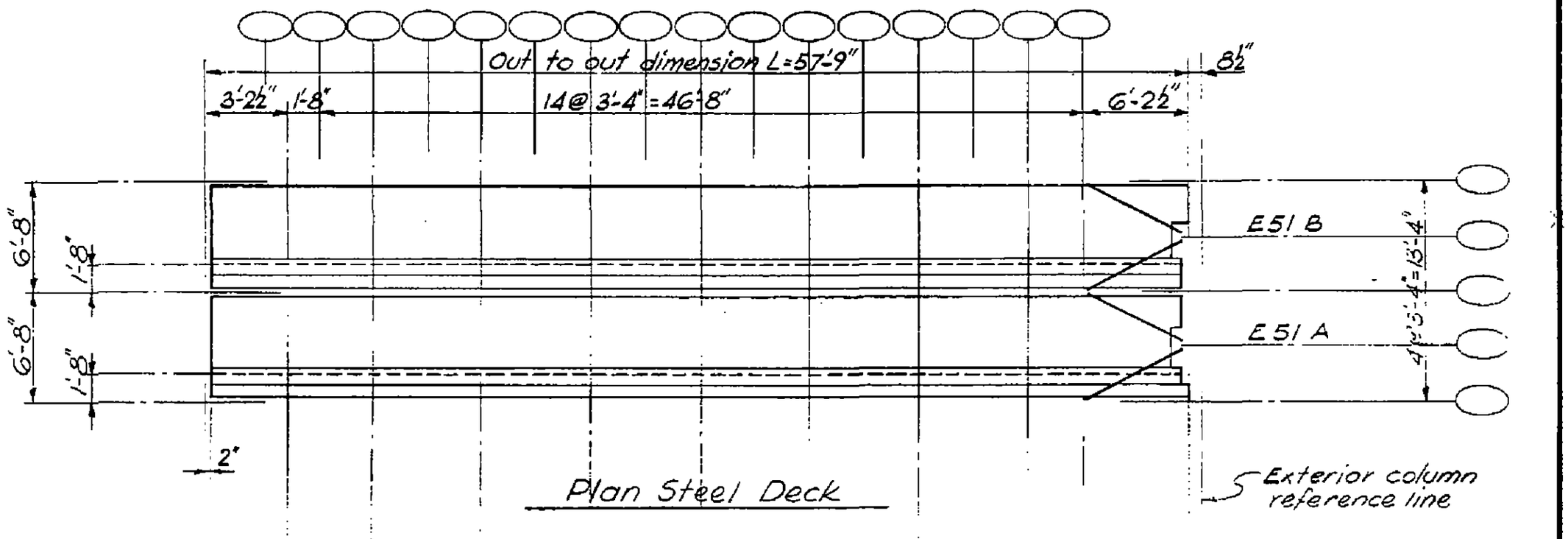

Plan Steel Deck

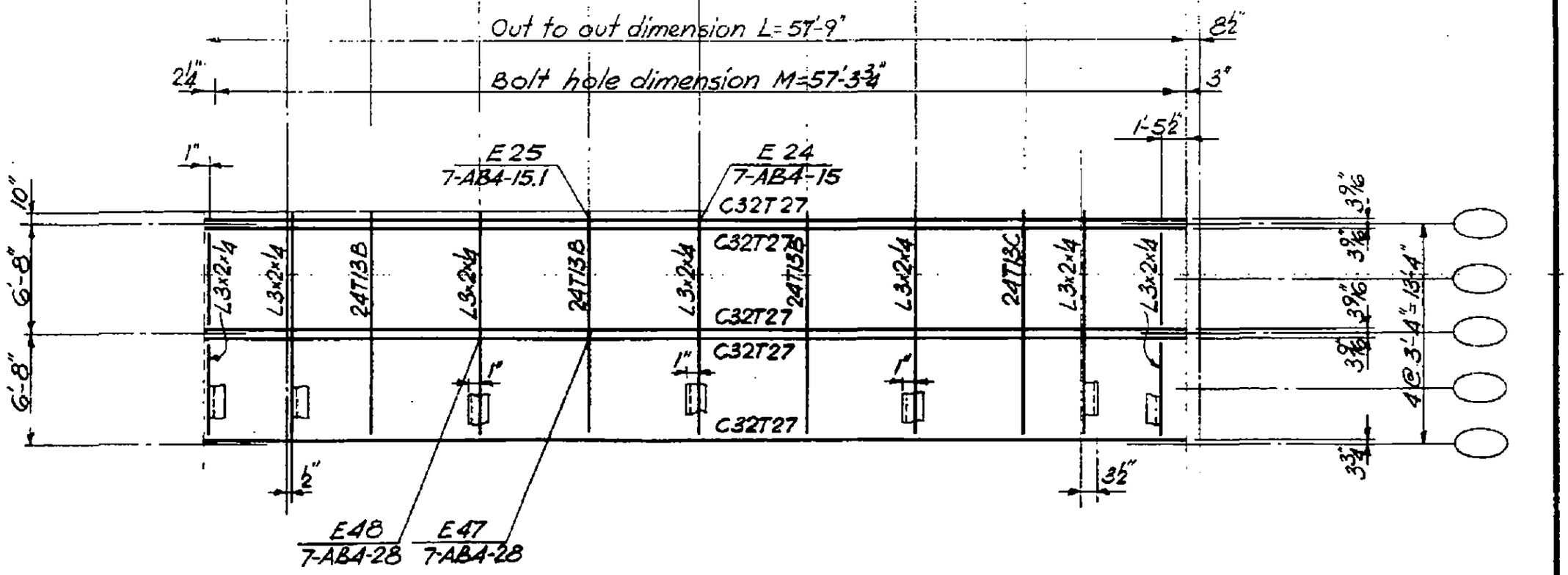

Plan Top Chord

LICENSED PROFESSIONAL ENGINEER — LESLIE E. ROBERTSON — No. 34360 — UNIVERSITY OF THE STATE OF NEW YORK

DESIGNED

DRAWN

REVIEWED

JC

7-AB3-77

SKILLING, HELLE, CHRISTIANSEN, ROBERTSON — Structural & Civil Engineers

PROJECT: THE WORLD TRADE CENTER | TITLE: FLOOR PANEL CRG | DATE: 1-6-69

REVISIONS

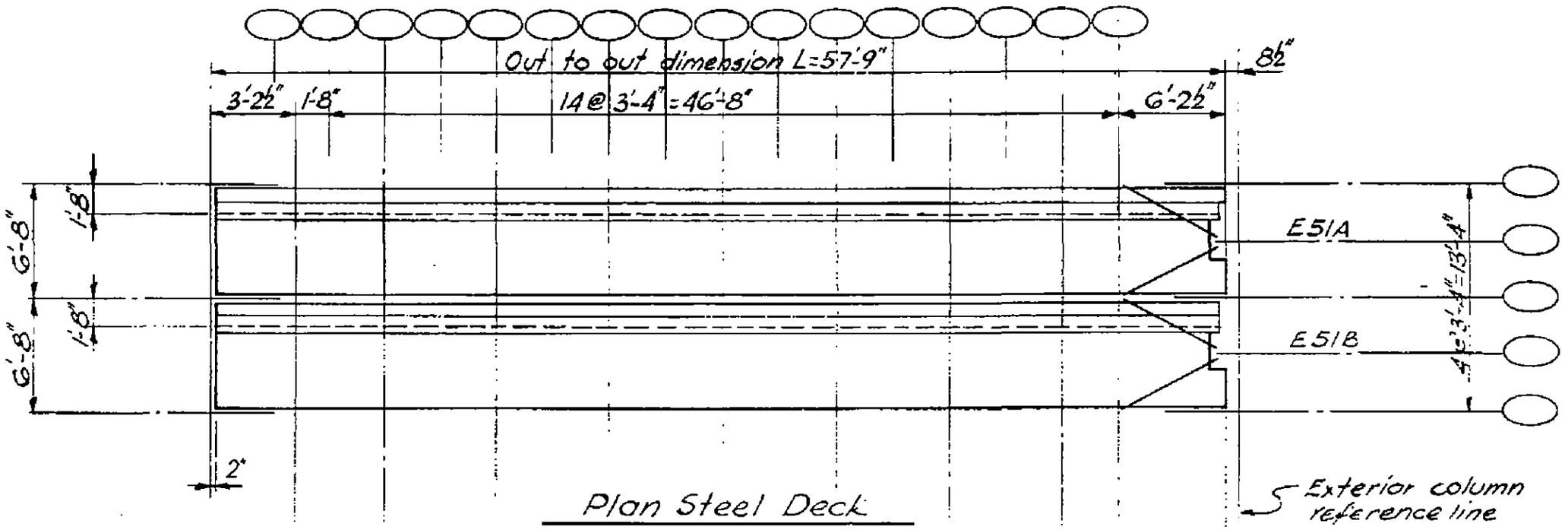

Plan Steel Deck

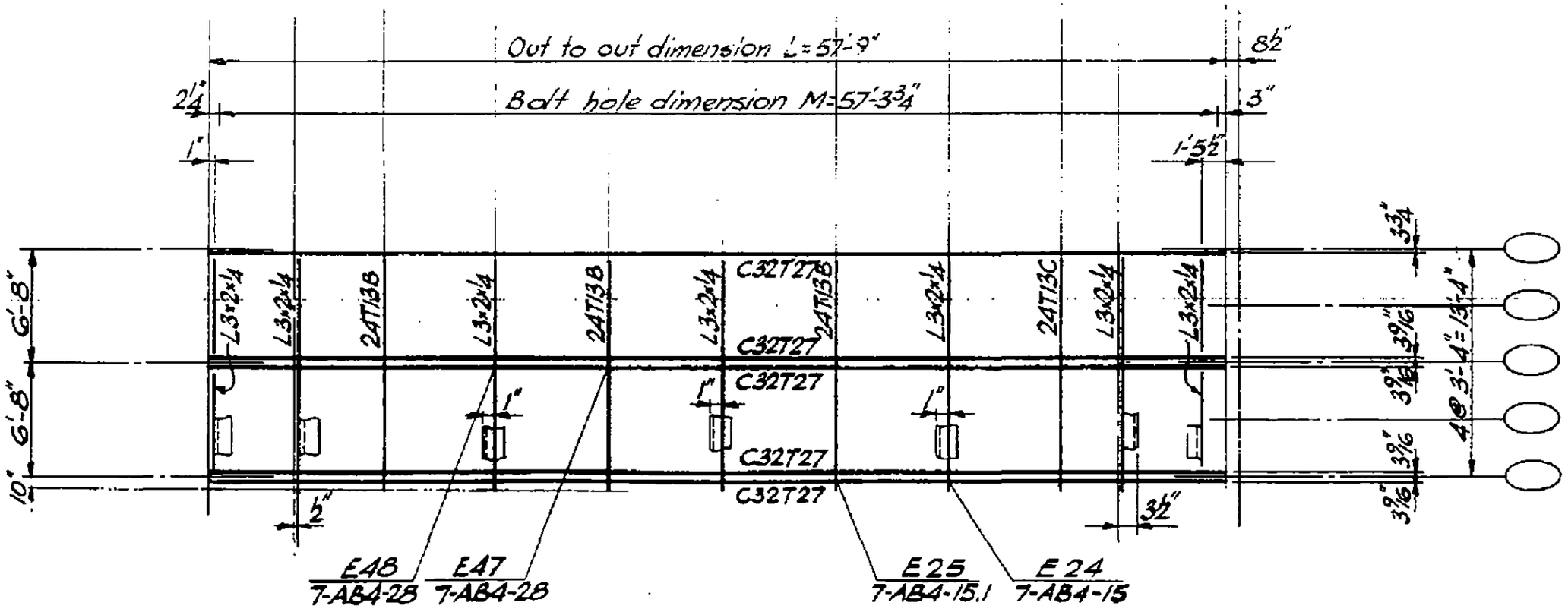

Plan Top Chord

LICENSED PROFESSIONAL ENGINEER — LESLIE E. ROBERTSON — No. 34360 — UNIVERSITY OF THE STATE OF NEW YORK

DESIGNED

DRAWN

REVIEWED

J7

7-AB3-78

SKILLING - HELLE - CHRISTIANSEN - ROBERTSON Structural & Civil Engineers

PROJECT THE WORLD TRADE CENTER | TITLE FLOOR PANEL C7 | DATE 10-20-67

REVISIONS

3-68
2-15-68
4-1-68
7-22-68
10-15-68

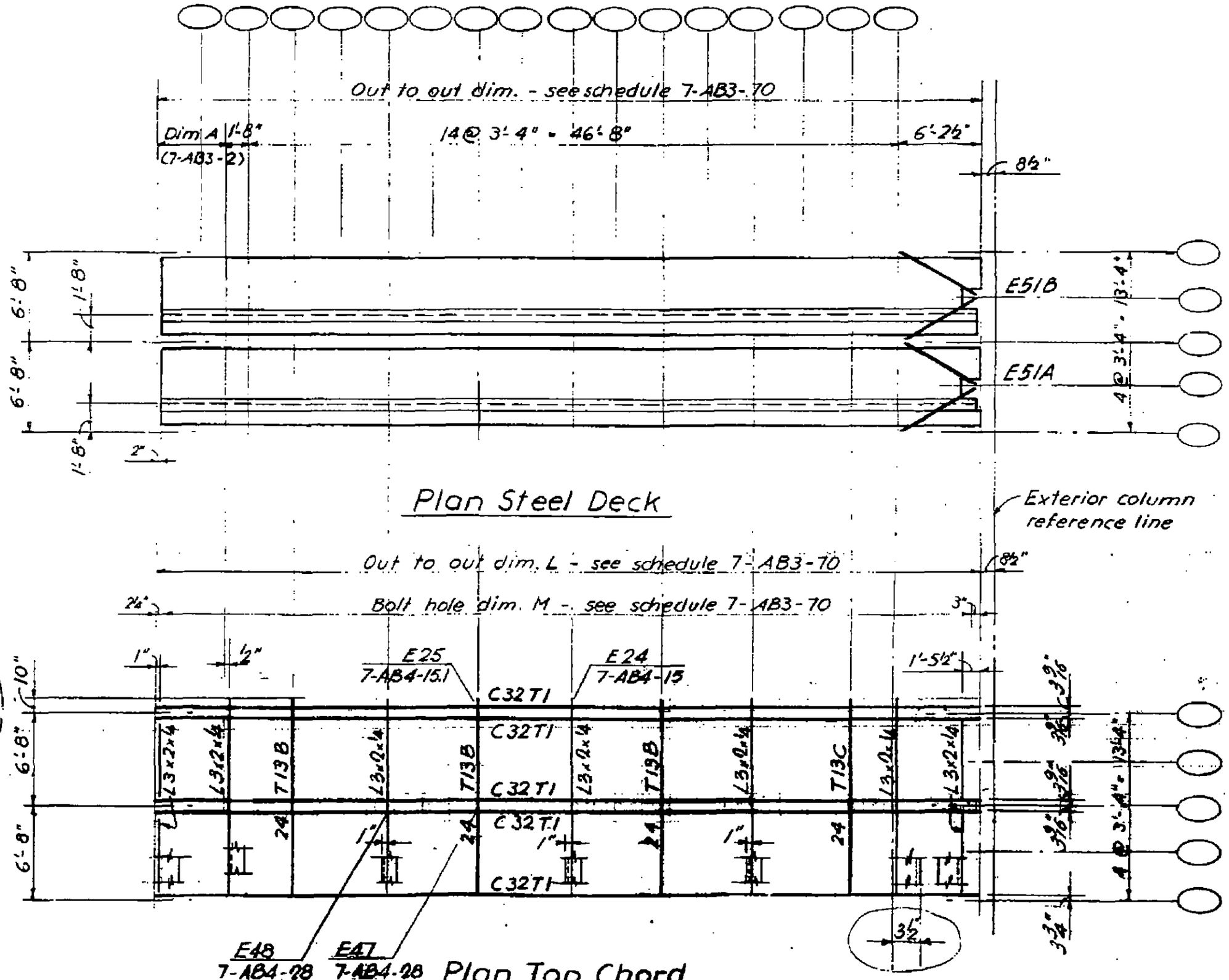

LICENSED PROFESSIONAL ENGINEER LESLIE E. ROBERTSON No. 48360 STATE OF NEW YORK

46

7-AB3-79

SKILLING - HELLE - CHRISTIANSEN - ROBERTSON Structural & Civil Engineers

PROJECT THE WORLD TRADE CENTER | TITLE FLOOR PANEL CR7 | DATE 10-20-67

REVISIONS

1-3-68
2-15-68
4-1-68
7-22-68
10-15-68

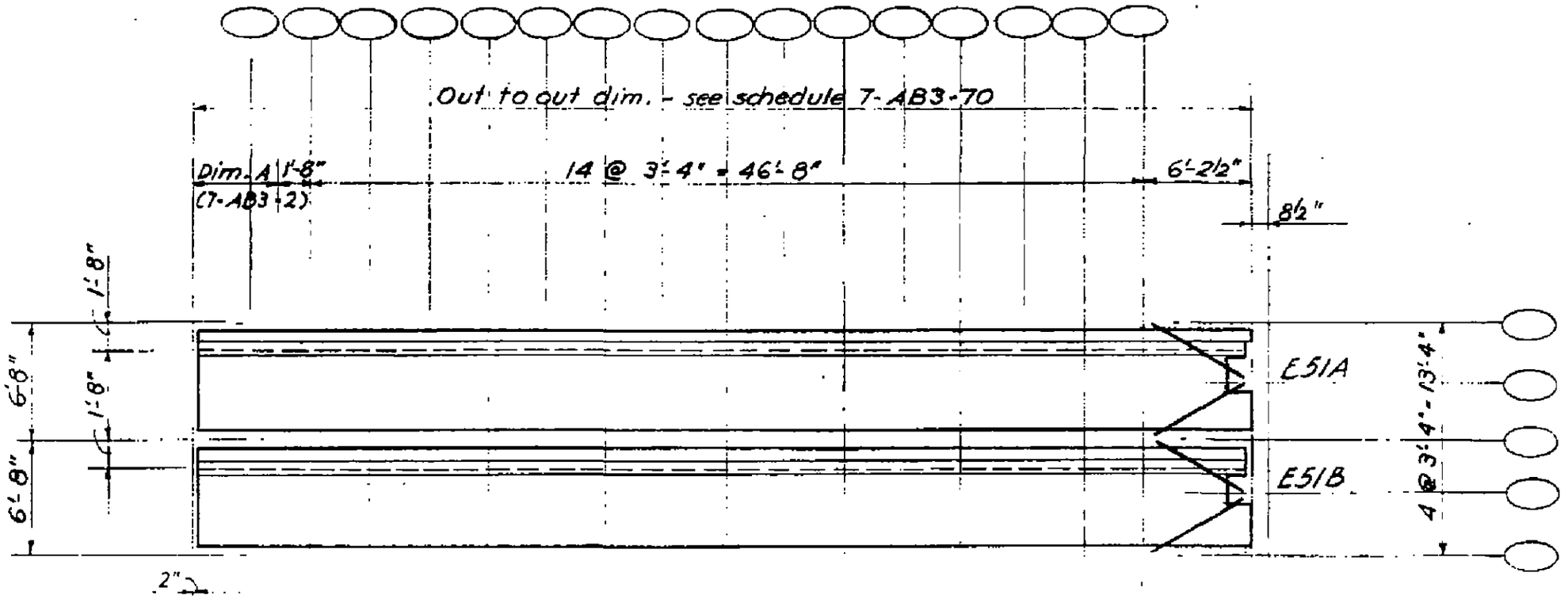

Plan Steel Deck

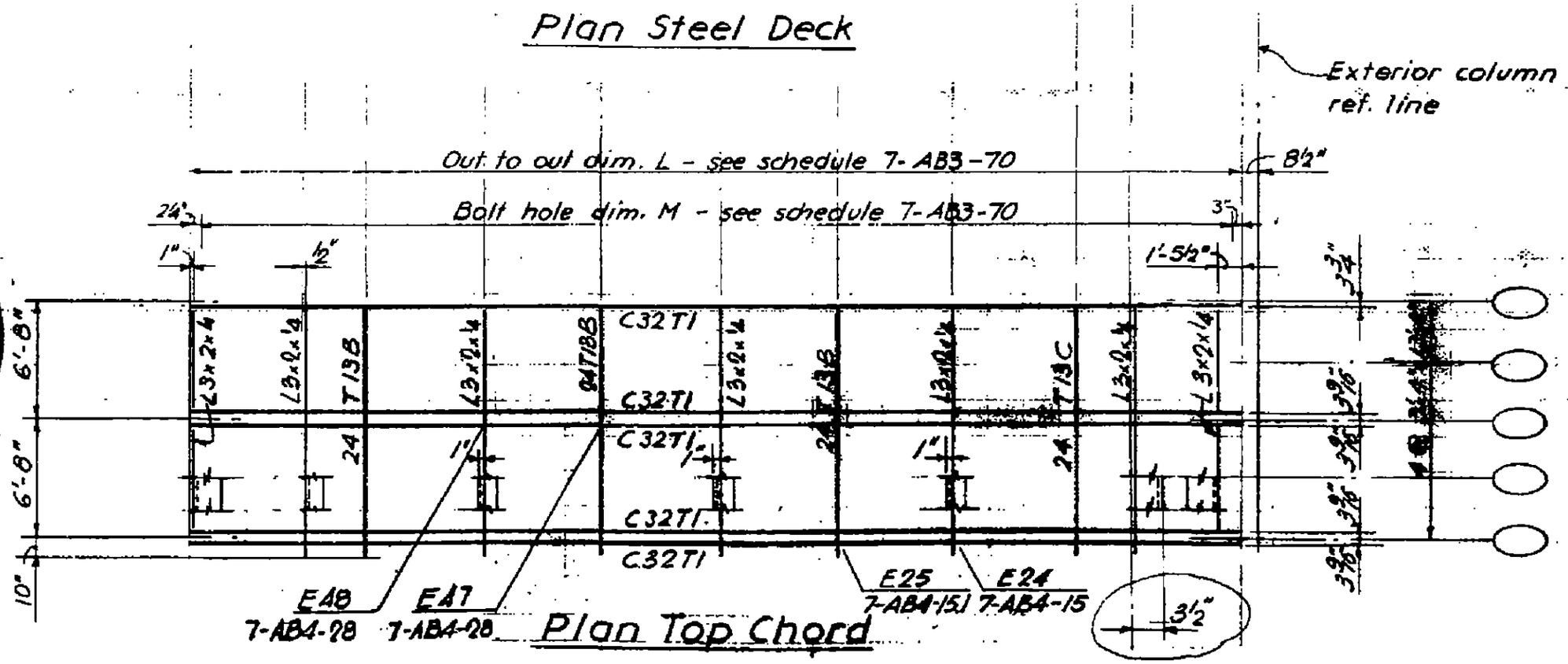

Plan Top Chord

LICENSED PROFESSIONAL ENGINEER LESLIE E. ROBERTSON No. 34360 REGISTERED IN THE STATE OF NEW YORK

42

7-AB3-80

SKILLING - HELLE - CHRISTIANSEN - ROBERTSON Structural & Civil Engineers

PROJECT	TITLE	DATE
THE WORLD TRADE CENTER	FLOOR PANEL DETAILS - INDEX & GENERAL NOTES	1-3-68

REVISIONS

4- 1-68
7-22-68
8- 1-68
8-15-68
10- 4-68
1- 3-69
1- 6-69
1-20-69
2- 3-69
3- 3-69
4- 1-69
Printed 5-1-69

7-AB4- 1	Floor Panel Details, Index & General Notes
7-AB4- 2	Schedule of Details - Tower A
7-AB4- 2.1	Schedule of Details - Tower A
7-AB4- 2.2 thru 2.4	Schedule of Details - Tower B
7-AB4- 3	Floor Panel - Detail E1-E3
7-AB4- 3.1	Floor Panel - Detail E1-E4
7-AB4- 4	Floor Panel - Detail E5 & E5A
7-AB4- 5	Floor Panel - Detail E6
7-AB4- 6	Floor Panel - Detail E6
7-AB4- 7	Floor Panel - Detail E8
7-AB4- 8	Floor Panel - Detail E9 & E9A
7-AB4- 9	Floor Panel - Detail E10
7-AB4-10	Floor Panel - Detail E11
7-AB4-11	Floor Panel - Detail E12
7-AB4-11.1	Floor Panel - Detail E12, E13
7-AB4-11.2	Floor Panel - Detail E13
7-AB4-11.3	Floor Panel - Detail E12, E13, E17, E-18
7-AB4-12	Floor Panel - Detail E16
7-AB4-13	Floor Panel - Detail E17
7-AB4-13.1	Floor Panel - Detail E18
7-AB4-13.2	Floor Panel - Detail E17 & E18
7-AB4-14	Floor Panel - Detail E19, E21, E22
7-AB4-14.1	Floor Panel - Detail E20
7-AB4-15	Floor Panel - Detail E23, E24
7-AB4-15.1 15.2	Floor Panel - Detail E25, E26, E26A
7-AB4-16	Floor Panel - Detail E27 & E27A
7-AB4-17 thru 7-AB4-17.7	Floor Panel - Detail E28 - E28E
7-AB4-18	Floor Panel - Detail E34, E35, E35A
7-AB4-18.1	Floor Panel - Detail E30,
7-AB4-18.2	Floor Panel - Detail E30, E34, E34A
7-AB4-18.3	Floor Panel - Detail E34A
7-AB4-18.4	Floor Panel - Detail E34B
7-AB4-18.5	Floor Panel - Detail E31
7-AB4-19	Floor Panel - Detail E38 & E39
7-AB4-20	Not Used
7-AB4-21	Floor Panel - Detail E40, E40A, E45, E45A
7-AB4-22	Floor Panel - Detail E41, E41A, E41C - E41E
7-AB4-22.1	Floor Panel - Detail E41B & E46
7-AB4-23	Floor Panel - Detail E42
7-AB4-24	Floor Panel - Detail E43
7-AB4-25	Floor Panel - Detail E44
7-AB4-26	Not Used
7-AB4-27	Not Used
7-AB4-28	Floor Panel - Detail E47 & E48
7-AB4-28.1	Floor Panel - Detail E47A
7-AB4-29	Floor Panel - Detail E 49 & E49A
7-AB4-30	Floor Panel - Detail E50
7-AB4-31,31.1,.2	Floor Panel - Detail E51A, E51B, E51C, E51D, E52D
7-AB4-32,32.1	Floor Panel - Detail E52A, E52B, E52C
7-AB4-33	Floor Panel - Detail E53
7-AB4-34,34.1	Floor Panel - Detail E54, E54A
7-AB4-35	Floor Panel - Detail E55
7-AB4-36	Floor Panel - Detail E56
7-AB4-37	Floor Panel - Detail E57
7-AB4-38	Floor Panel - Detail E58, E59, E60
7-AB4-38.1 & 38.2,38.3	Floor Panel - Detail E58, E59, E59A
7-AB4-39	Floor Panel - Detail E60
7-AB4-40	Floor Panel - Detail E61 - E67
7-AB4-41	Floor Panel - Detail E68A
7-AB4-41.1	Floor Panel - Detail E68
7-AB4-42	Floor Panel - Detail E61 - E67
7-AB4-42.1	Damper Connection - Detail E61 - E67
7-AB4-43	Floor Panel - Detail E60, E68, E68A
7-AB4-44	Floor Panel - Detail E61 - E67
7-AB4-45,45.1	Floor Panel - Detail E65
7-AB4-46	Floor Panel - Detail E60 & E68
7-AB4-46.1	Floor Panel - Detail E68A
7-AB4-47	Floor Panel - Detail E60 - E67
7-AB4-47.1	Floor Panel - Detail E68 & E68A
7-AB4-48	Floor Panel - Detail E61 - E64
7-AB4-49	Floor Panel - Detail E60, E66, E67
7-AB4-49.1	Floor Panel - Detail E68 & E68A
7-AB4-49.2	Floor Panel - Detail E69
7-AB4-50 thru 7-AB4-52	Floor Panel - Detail E70 thru E73
7-AB4-53	Floor Panel - Detail E74
7-AB4-54	Floor Panel - Detail E75
7-AB4-55	Floor Panel - Detail E75A
7-AB4-56	Floor Panel - Detail E76
7-AB4-57	Floor Panel - Detail E76
7-AB4-58	Floor Panel - Detail E76A, E76B
7-AB4-59	Floor Panel - Detail E76A, E76B, E77
7-AB4-60	Floor Panel - Detail E76, E76A, E76B
7-AB4-61	Floor Panel - Detail E77A
7-AB4-62	Floor Panel - Detail E78, E79

NOTES:
1. The Contractor shall detail all connections, erection aids and all else required for the fabrication, assembly and erection of the pre-fabricated floor panels. Steel deck and power/telephone cell details shall be done by the Contractor for WTC Contract 222.00 -- all other details by the Contractor for WTC Contract 221.00. Details shall incorporate the geometry requirements and specific detail requirements where indicated in Drawing Book 7. Details shall be proportioned to transmit the loads indicated in Drawing Book 7 and all other loads required for assembly and for erection.
2. The Contractor shall submit details to the Engineer for review prior to performing any work.

LICENSED PROFESSIONAL ENGINEER LESLIE E. ROBERTSON No. 34360 CERTIFICATE OF THE STATE OF NEW YORK

SKILLING - HELLE - CHRISTIANSEN - ROBERTSON Structural & Civil Engineers

PROJECT THE WORLD TRADE CENTER TITLE FLOOR PANEL DETAIL SCHEDULE - TOWER A DATE 10-20-67

REVISIONS
1-3-68
7-22-68
1-6-69

No.	Floor	Detail	Ref. dwg.
(1)	10-38	E6	7-AB4-5
	39, 40	E6	7-AB4-5
	44-46	E10	7-AB4-8
	47-49	E9	7-AB4-8
	50-74	E6	7-AB4-5
	78, 79	E9A	7-AB4-8
	80-106	E6	7-AB4-5
(2)	10-38	E6	7-AB4-5
	39, 40	E6	7-AB4-5
	44-46	E10	7-AB4-8
	47-49	E9	7-AB4-8
	50-74	E6	7-AB4-5
	78	E9A	7-AB4-8
	79-106	E6	7-AB4-5
(3)	10-38	E6	7-AB4-5
	39, 40	E6	7-AB4-5
	44, 45	E10	7-AB4-8
	46	E8	7-AB4-7
	47-71	E6	7-AB4-5
	72-74	E8	7-AB4-7
	78-80	E10	7-AB4-8
	81-83	E9A	7-AB4-8
	84-106	E6	7-AB4-5
(4)	10, 11	E6	7-AB4-5
	12-38	E6	7-AB4-5
	39	E6	7-AB4-5
	40	E8	7-AB4-7
	44	E10	7-AB4-8
	45; 46	E8	7-AB4-7
	47-71	E6	7-AB4-5
	72-74	E8	7-AB4-7
	78-80	E10	7-AB4-8
	81-83	E9A	7-AB4-8
	84-106	E6	7-AB4-5

No.	Floor	Detail	Ref. dwg.
(5)	10-40	E17	7-AB4-13
	44	E22	7-AB4-14
	45-49	E21	7-AB4-14
	50-74	E17	7-AB4-13
	78	E22	7-AB4-14
	79	E21	7-AB4-14
	80-106	E17	7-AB4-13
(6)	10-40	E12	7-AB4-11
	44	E22	7-AB4-14
	45-49	E21	7-AB4-14
	50-66	E12	7-AB4-11
	67	E12	7-AB4-11
	68-74	E12	7-AB4-11
	78	E22	7-AB4-14
	79	E21	7-AB4-14
	80-106	E12	7-AB4-11
(7)	10-40	E18	7-AB4-13.1
	44-49	E19	7-AB4-14
	50-74	E18	7-AB4-13.1
	78, 79	E19	7-AB4-14
	80-106	E18	7-AB4-13.1
(8)	10-24	E13	7-AB4-11.2
	25	E13	7-AB4-11.2
	26-40	E13	7-AB4-11.2
	44-49	E21	7-AB4-14
	50-58	E13	7-AB4-11.2
	59	E13	7-AB4-11.2
	60-66	E13	7-AB4-11.2
	67	E13	7-AB4-11.2
	68-74	E13	7-AB4-11.2
	78-79	E21	7-AB4-14
	80-91	E13	7-AB4-11.2
	92	E13	7-AB4-11.2
	93-106	E13	7-AB4-11.2

No.	Floor	Detail	Ref. dwg.
(9)	10-24	E16	7-AB4-12
	25	E11	7-AB4-10
	26-40	E16	7-AB4-12
	44-49	E20	7-AB4-14.1
	50-58	E16	7-AB4-12
	59	E11	7-AB4-10
	60-74	E16	7-AB4-12
	78-79	E20	7-AB4-14.1
	80-91	E16	7-AB4-12
	92	E11	7-AB4-10
	93-106	E16	7-AB4-12
(10)	Same	as (5) except	
	79	E17	7-AB4-13
(11)	Same	as (6) except	
	79	E12	7-AB4-11
(12)	Same	as (7) except	
	79	E18	7-AB4-13.1
(13)	Same	as (8) except	
	79	E13	7-AB4-11.2
(14)	Same	as (9) except	
	79	E16	7-AB4-12
(15)	10-40	E17	7-AB4-13
	44	E22	7-AB4-14
	45	E21	7-AB4-14
	46-74	E17	7-AB4-13
	78	E22	7-AB4-14
	79-83	E21	7-AB4-14
	84-106	E17	7-AB4-13

LICENSED PROFESSIONAL ENGINEER LESLIE E. ROBERTSON No. 34360 UNIVERSITY OF THE STATE OF NEW YORK

7-AB4-2

49

SKILLING - HELLE - CHRISTIANSEN - ROBERTSON Structural & Civil Engineers

PROJECT THE WORLD TRADE CENTER TITLE FLOOR PANEL DETAIL SCHEDULE - TOWER A DATE 10-20-67

REVISIONS
1-3-68
7-22-68
1-6-69

No.	Floor	Detail	Ref. Dwg.
(16)	10-40	E12	7-AB4-11
	44	E22	7-AB4-14
	45	E21	7-AB4-14
	46-66	E12	7-AB4-11
	67	E12	7-AB4-11
	68-74	E12	7-AB4-11
	78	E22	7-AB4-14
	79-83	E21	7-AB4-14
	84-106	E12	7-AB4-11
(17)	10-40	E18	7-AB4-13.1
	44,45	E19	7-AB4-14
	46-74	E18	7-AB4-13.1
	78-83	E19	7-AB4-14
	84-106	E18	7-AB4-13.1
(18)	10-24	E13	7-AB4-11.2
	25	E13	7-AB4-11.2
	26-40	E13	7-AB4-11.2
	44,45	E21	7-AB4-14
	46-58	E13	7-AB4-11.2
	59	E13	7-AB4-11.2
	60-66	E13	7-AB4-11.2
	67	E13	7-AB4-11.2
	68-74	E13	7-AB4-11.2
	78-83	E21	7-AB4-14
	84-91	E13	7-AB4-11.2
	92	E13	7-AB4-11.2
	93-106	E13	7-AB4-11.2
(19)	10-24	E16	7-AB4-12
	25	E11	7-AB4-10
	26-40	E16	7-AB4-12
	44,45	E20	7-AB4-14.1
	46-58	E16	7-AB4-12
	59	E11	7-AB4-10
	60-74	E16	7-AB4-12
	78-83	E20	7-AB4-14.1
	84-91	E16	7-AB4-12
	92	E11	7-AB4-10
	93-106	E16	7-AB4-12

No.	Floor	Detail	Ref. Dwg
(20)	Same as	(15) except	
	45	E17	7-AB4-13
(21)	Same as	(16) except	
	45	E12	7-AB4-11
(22)	Same as	(17) except	
	45	E18	7-AB4-13.1
(23)	Same as	(18) except	
	45	E13	7-AB4-11.2
(24)	Same as	(19) except	
	45	E16	7-AB4-12
(25)	10-40	E30	7-AB4-18.1
	44	E31	7-AB4-18.5
	45-49	E30	7-AB4-18.1
	50-66	E30	7-AB4-18.1
	67	E30	7-AB4-18.1
	68-74	E30	7-AB4-18.1
	78	E31	7-AB4-18.5
	79	E30	7-AB4-18.1
	80-106	E30	7-AB4-18.1
(26)	10-40	E34	7-AB4-18
	44	E35A	7-AB4-18
	45-49	E34	7-AB4-18
	50-66	E34	7-AB4-18
	67	E34	7-AB4-18
	68-74	E34	7-AB4-18
	78	E35	7-AB4-18
	79	E34	7-AB4-18
	80-106	E34	7-AB4-18
(27)	Same as	(25)	
(28)	Same as	(26) except	
	44	E35	7-AB4-18

No.	Floor	Detail	Ref. Dwg.
(29)	10-40	E30	7-AB4-18.1
	44	E31	7-AB4-18.5
	45	E30	7-AB4-18.1
	46-66	E30	7-AB4-18.1
	67	E30	7-AB4-18.1
	68-74	E30	7-AB4-18.1
	78	E31	7-AB4-18.5
	79-83	E30	7-AB4-18.1
	84-106	E30	7-AB4-18.1
(30)	10-40	E34	7-AB4-18
	44	E35	7-AB4-18
	45	E34	7-AB4-18
	46-66	E34	7-AB4-18
	67	E34	7-AB4-18
	68-74	E34	7-AB4-18
	78	E35	7-AB4-18
	79-83	E34	7-AB4-18
	84-106	E34	7-AB4-18
(31)	Same as	(29) except	
	45	E30	7-AB4-18.1
(32)	Same as	(30) except	
	45	E34	7-AB4-18

LESLIE E. ROBERTSON — No. 34360 — REGISTERED PROFESSIONAL ENGINEER — STATE OF NEW YORK

7-AB4-2.1

50

SKILLING - HELLE - CHRISTIANSEN - ROBERTSON Structural & Civil Engineers

PROJECT THE WORLD TRADE CENTER TITLE FLOOR PANEL DETAIL SCHEDULE - TOWER B DATE 10-20-67

REVISIONS
1-3-68
7-22-68
10-4-68
1-6-69

NO.	Floor	Detail	Ref. dwg.
①	10	Hold	
	11	Hold	
	12	Hold	
	13	Hold	
	14-38	E6	7-AB4-5
	39-40	E6	7-AB4-5
	44-46	E10	7-AB4-8
	47-49	E9	7-AB4-8
	50-74	E6	7-AB4-5
	78-79	E9A	7-AB4-8
	80-106	E6	7-AB4-5
②	10	Hold	
	11	Hold	
	12	Hold	
	13	Hold	
	14-38	E6	7-AB4-5
	39,40	E6	7-AB4-5
	44-46	E10	7-AB4-8
	47-49	E9	7-AB4-8
	50-74	E6	7-AB4-5
	78	E9A	7-AB4-8
	79-106	E6	7-AB4-5
③	10	Hold	
	11	Hold	
	12	Hold	
	13	Hold	
	14-38	E6	7-AB4-5
	39,40	E6	7-AB4-5
	44,45	E10	7-AB4-8
	46	E8	7-AB4-7
	47-71	E6	7-AB4-5
	72-74	E8	7-AB4-7
	78-80	E10	7-AB4-8
	81-83	E9A	7-AB4-8
	84-106	E6	7-AB4-5
④	10	Hold	
	11	Hold	
	12	Hold	
	13	Hold	
	14-38	E6	7-AB4-5
	39	E6	7-AB4-5
	40	E8	7-AB4-7
	44	E10	7-AB4-8
	45-46	E8	7-AB4-7
	47-71	E6	7-AB4-5
	72-74	E8	7-AB4-7
	78-80	E10	7-AB4-8
	81-83	E9A	7-AB4-8
	84-106	E6	7-AB4-5
⑤	10	Hold	
	11	Hold	
	12	Hold	
	13	Hold	
	14-40	E17	7-AB4-13
	44	E22	7-AB4-14
	45-49	E21	7-AB4-14
	50-74	E17	7-AB4-13
	78	E22	7-AB4-14
	79	E21	7-AB4-14
	80-106	E17	7-AB4-13
⑥	10	Hold	
	11	Hold	
	12	Hold	
	13	Hold	
	14-40	E12	7-AB4-11
	44	E22	7-AB4-14
	45-49	E21	7-AB4-14
	50-74	E12	7-AB4-11
	78	E22	7-AB4-14
	79	E21	7-AB4-14
	80-106	E12	7-AB4-11
⑦	10	Hold	
	11	Hold	
	12	Hold	
	13	Hold	
	14-40	E18	7-AB4-13.1
	44-49	E19	7-AB4-14
	50-74	E18	7-AB4-13.1
	78-79	E19	7-AB4-14
	80-106	E18	7-AB4-13.1
⑧	10	Hold	
	11	Hold	
	12	Hold	
	13	Hold	
	14-24	E13	7-AB4-11.2
	25	E13	7-AB4-11.2
	26-40	E13	7-AB4-11.2
	44-49	E21	7-AB4-14
	50-58	E13	7-AB4-11.2
	59	E13	7-AB4-11.2
	60-74	E13	7-AB4-11.2
	78-79	E21	7-AB4-14
	80-91	E13	7-AB4-11.2
	92	E13	7-AB4-11.2
	93-106	E13	7-AB4-11.2

LICENSED PROFESSIONAL ENGINEER LESLIE E. ROBERTSON No. 34360 THE STATE OF NEW YORK

7-AB4-2.2

SKILLING - HELLE - CHRISTIANSEN - ROBERTSON Structural & Civil Engineers

PROJECT: THE WORLD TRADE CENTER

TITLE: FLOOR PANEL DETAIL SCHEDULE - TOWER B

DATE: 10-20-67

REVISIONS
1-3-68
7-22-68
10-4-68
1-6-69

No.	Floor	Detail	Ref. dwg.
(9)	10	Hold	
	11	Hold	
	12	Hold	
	13	Hold	
	14-24	E16	7-AB4-12
	25	E11	7-AB4-10
	26-40	E16	7-AB4-12
	44-49	E20	7-AB4-14.1
	50-58	E16	7-AB4-12
	59	E11	7-AB4-10
	60-74	E16	7-AB4-12
	78,79	E20	7-AB4-14.1
	80-91	E16	7-AB4-12
	92	E11	7-AB4-10
	93-106	E16	7-AB4-12
(10)	Same as (5) except		
	79	E17	7-AB4-13
(11)	Same as (6) except		
	79	E12	7-AB4-11
(12)	Same as (7) except		
	79	E18	7-AB4-13.1
(13)	Same as (8) except		
	79	E13	7-AB4-11.2
(14)	Same as (9) except		
	79	E16	7-AB4-12
(15)	10	Hold	
	11	Hold	
	12	Hold	
	13	Hold	
	14-40	E17	7-AB4-13
	44	E22	7-AB4-14
	45	E21	7-AB4-14
	46-74	E17	7-AB4-13
	78	E22	7-AB4-14
	79-83	E21	7-AB4-14
	84-106	E17	7-AB4-13

No.	Floor	Detail	Ref. dwg.
(16)	10	Hold	
	11	Hold	
	12	Hold	
	13	Hold	
	14-40	E12	7-AB4-11
	44	E22	7-AB4-14
	45	E21	7-AB4-14
	46-74	E12	7-AB4-11
	78	E22	7-AB4-14
	79-83	E21	7-AB4-14
	84-106	E12	7-AB4-11
(17)	10	Hold	
	11	Hold	
	12	Hold	
	13	Hold	
	14-40	E18	7-AB4-13.1
	44-45	E19	7-AB4-14
	46-74	E18	7-AB4-13.1
	78-83	E19	7-AB4-14
	84-106	E18	7-AB4-13.1
(18)	10	Hold	
	11	Hold	
	12	Hold	
	13	Hold	
	14-24	E13	7-AB4-11.2
	25	E13	7-AB4-11.2
	26-40	E13	7-AB4-11.2
	44,45	E21	7-AB4-14
	46-58	E13	7-AB4-11.2
	59	E13	7-AB4-11.2
	60-74	E13	7-AB4-11.2
	78-83	E21	7-AB4-14
	84-91	E13	7-AB4-11.2
	92	E13	7-AB4-11.2
	93-106	E13	7-AB4-11.2

No.	Floor	Detail	Ref. dwg.
(19)	10	Hold	
	11	Hold	
	12	Hold	
	13	Hold	
	14-24	E16	7-AB4-12
	25	E11	7-AB4-10
	26-40	E16	7-AB4-12
	44-45	E20	7-AB4-14.1
	46-58	E16	7-AB4-12
	59	E11	7-AB4-10
	60-74	E16	7-AB4-12
	78-83	E20	7-AB4-14.1
	84-91	E16	7-AB4-12
	92	E11	7-AB4-10
	93-106	E16	7-AB4-12
(20)	Same as (15) except		
	45	E17	7-AB4-13
(21)	Same as (16) except		
	45	E12	7-AB4-11
(22)	Same as (17) except		
	45	E18	7-AB4-13.1
(23)	Same as (18) except		
	45	E13	7-AB4-11.2
(24)	Same as (19) except		
	45	E16	7-AB4-12
(25)	10	Hold	
	11	Hold	
	12	Hold	
	13	Hold	
	14-40	E30	7-AB4-18.1
	44	E31	7-AB4-18.5
	45-49	E30	7-AB4-18.1
	50-74	E30	7-AB4-18.1
	78	E31	7-AB4-18.5
	79	E30	7-AB4-18.1
	80-106	E30	7-AB4-18.1

LESLIE E. ROBERTSON — No. 84360 — UNIVERSITY OF THE STATE OF NEW YORK

7-AB4-2.3

SKILLING - HELLE - CHRISTIANSEN - ROBERTSON Structural & Civil Engineers

PROJECT THE WORLD TRADE CENTER | TITLE FLOOR PANEL DETAIL SCHEDULE - TOWER B | DATE 10-27-67

REVISIONS
1-3-68
7-22-68
8-15-68
1-6-69

No.	Floor	Detail	Ref. dwg.
(26)	10	Hold	
	11	Hold	
	12	Hold	
	13	Hold	
	14-24, 26-40	E34	7-AB4-18
	25	E34B	7-AB4-18.4
	44	E35	7-AB4-18
	45-49	E34	7-AB4-18
	50-58, 60-74	E34	7-AB4-18
	59	E34B	7-AB4-18.4
	78	E35	7-AB4-18
	79	E34	7-AB4-18
	80-91, 93-106	E34	7-AB4-18
	92	E34B	7-AB4-18.4
(27)	Same as (25) except		
	79	E30	7-AB4-18.1
(28)	Same as (26) except		
	25, 59, 79, 92	E34	7-AB4-18
(29)	10	Hold	
	11	Hold	
	12	Hold	
	13	Hold	
	14-40	E30	7-AB4-18.1
	44	E31	7-AB4-18.5
	45	E30	7-AB4-18
	46-74	E30	7-AB4-18.1
	78	E31	7-AB4-18.5
	79-83	E30	7-AB4-18.1
	84-106	E30	7-AB4-18.1

No.	Floor	Detail	Ref. dwg.
(30)	10	Hold	
	11	Hold	
	12	Hold	
	13	Hold	
	14-40	E34	7-AB4-18
	44	E35	7-AB4-18
	45	E34	7-AB4-18
	46-74	E34	7-AB4-18
	78	E35	7-AB4-18
	79-83	E34	7-AB4-18
	84-106	E34	7-AB4-18
(31)	Same as (29) except		
	45	E30	7-AB4-18.1
(32)	10	Hold	
	11	Hold	
	12	Hold	
	13	Hold	
	14-24	E34	7-AB4-18
	25	E34B	7-AB4-18.4
	26-40	E34	7-AB4-18
	44	E35	7-AB4-18
	45	E34	7-AB4-18
	46-58, 60-74	E34	7-AB4-18
	78	E35	7-AB4-18
	79-83	E34	7-AB4-18
	84-91, 93-106	E34	7-AB4-18
	59, 92	E34B	7-AB4-18.4

LICENSED PROFESSIONAL ENGINEER LESLIE E. ROBERTSON No. 34360 UNIVERSITY OF THE STATE OF NEW YORK

7-AB4-2.4

SKILLING - HELLE - CHRISTIANSEN - ROBERTSON Structural & Civil Engineers

PROJECT THE WORLD TRADE CENTER | TITLE DETAIL E1, E2, E3 & E4 | DATE 10-20-67

REVISIONS

1-3-68

10-15-68

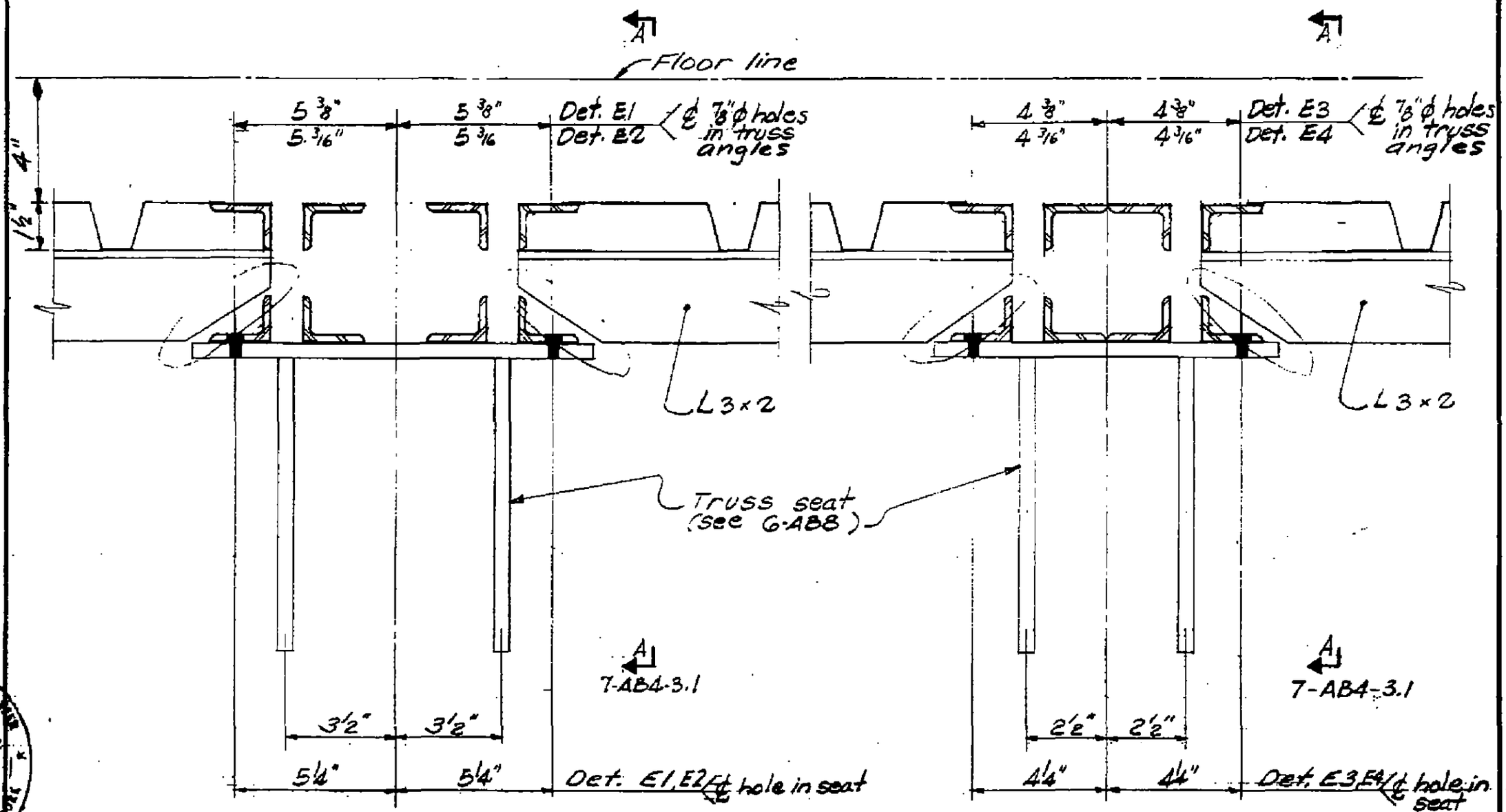

LICENSED PROFESSIONAL ENGINEER
LESLIE E. ROBERTSON
No. 34360
STATE OF NEW YORK

59

7-AB4-3

SKILLING - HELLE - CHRISTIANSEN - ROBERTSON Structural & Civil Engineers

PROJECT THE WORLD TRADE CENTER | TITLE DETAIL E1, E2, E3, E4, E5, E5A, E6 | DATE 10-20-67

REVISIONS

1-3-68

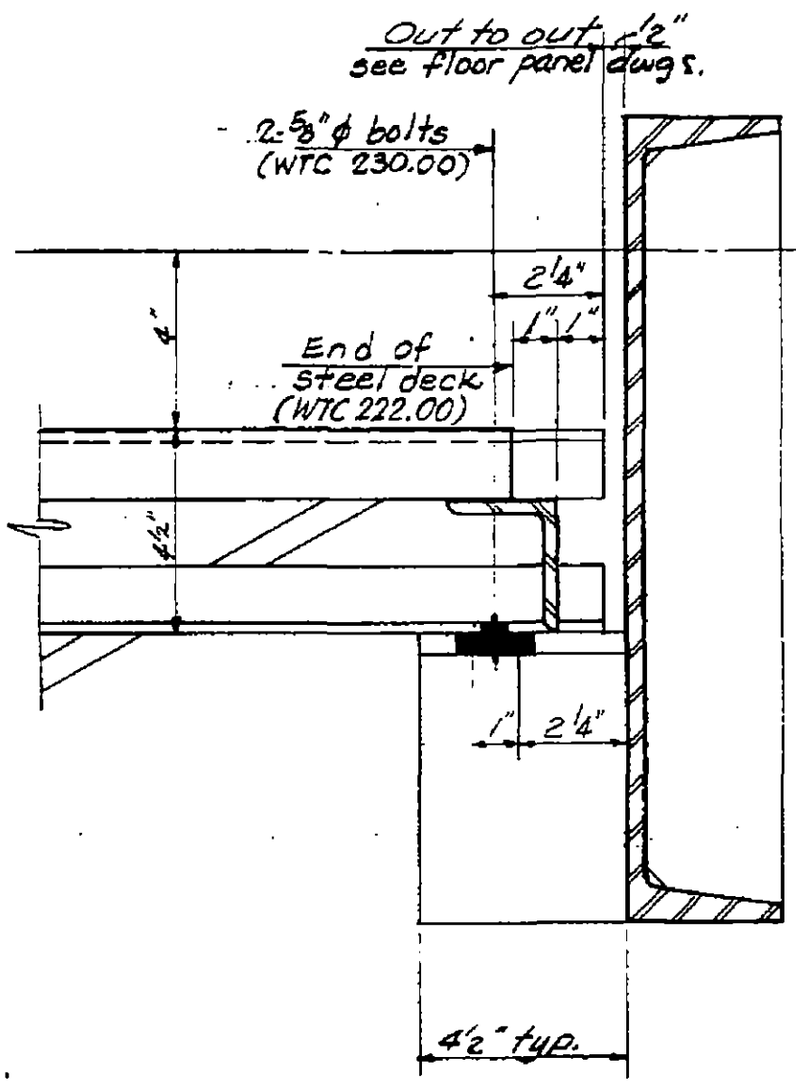

Section A-A
at upset channel

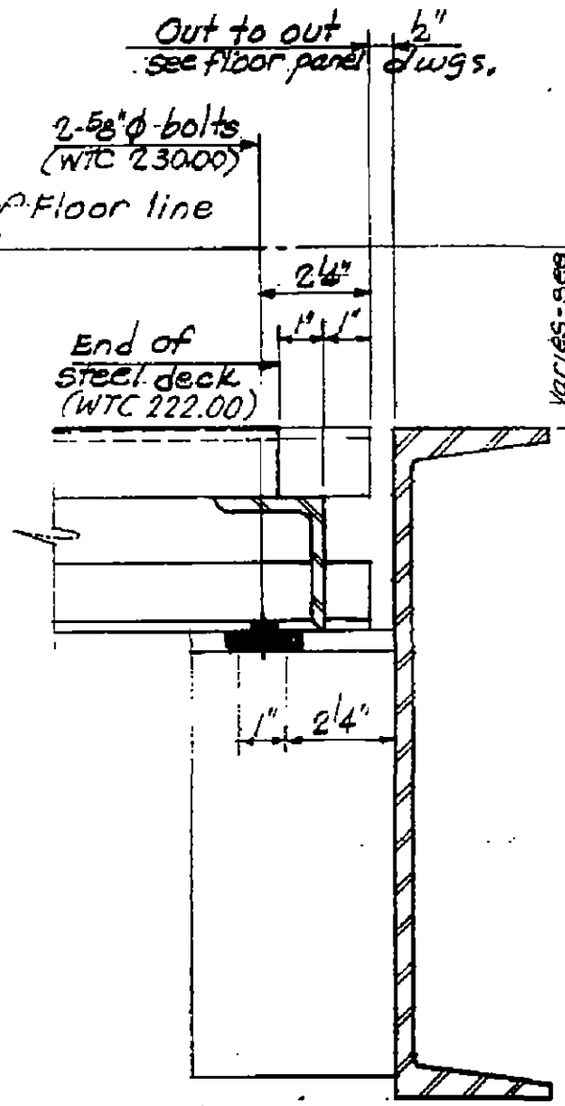

Section A-A
at channel

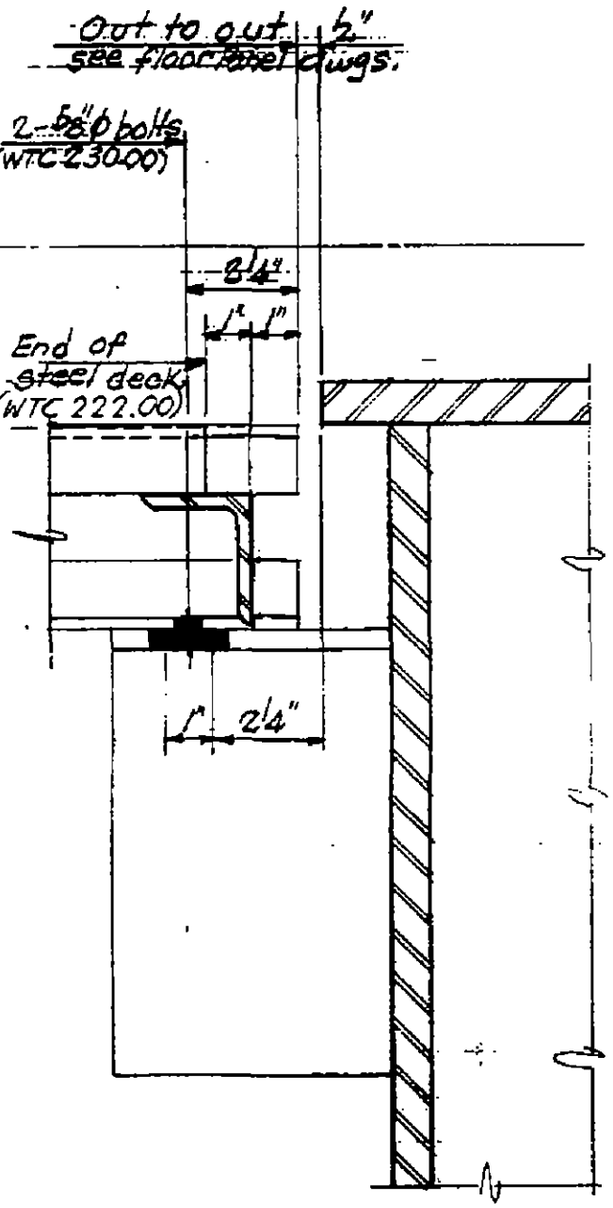

Section A-A
at box beam

LICENSED PROFESSIONAL ENGINEER
LESLIE E. ROBERTSON
No. 24360
STATE OF NEW YORK

7-AB4-3.1

SKILLING - HELLE - CHRISTIANSEN - ROBERTSON Structural & Civil Engineers

PROJECT THE WORLD TRADE CENTER | TITLE FLOOR PANEL-DETAIL E5 & E5A | DATE 10-20-67

REVISIONS
1-3-68
10-15-68

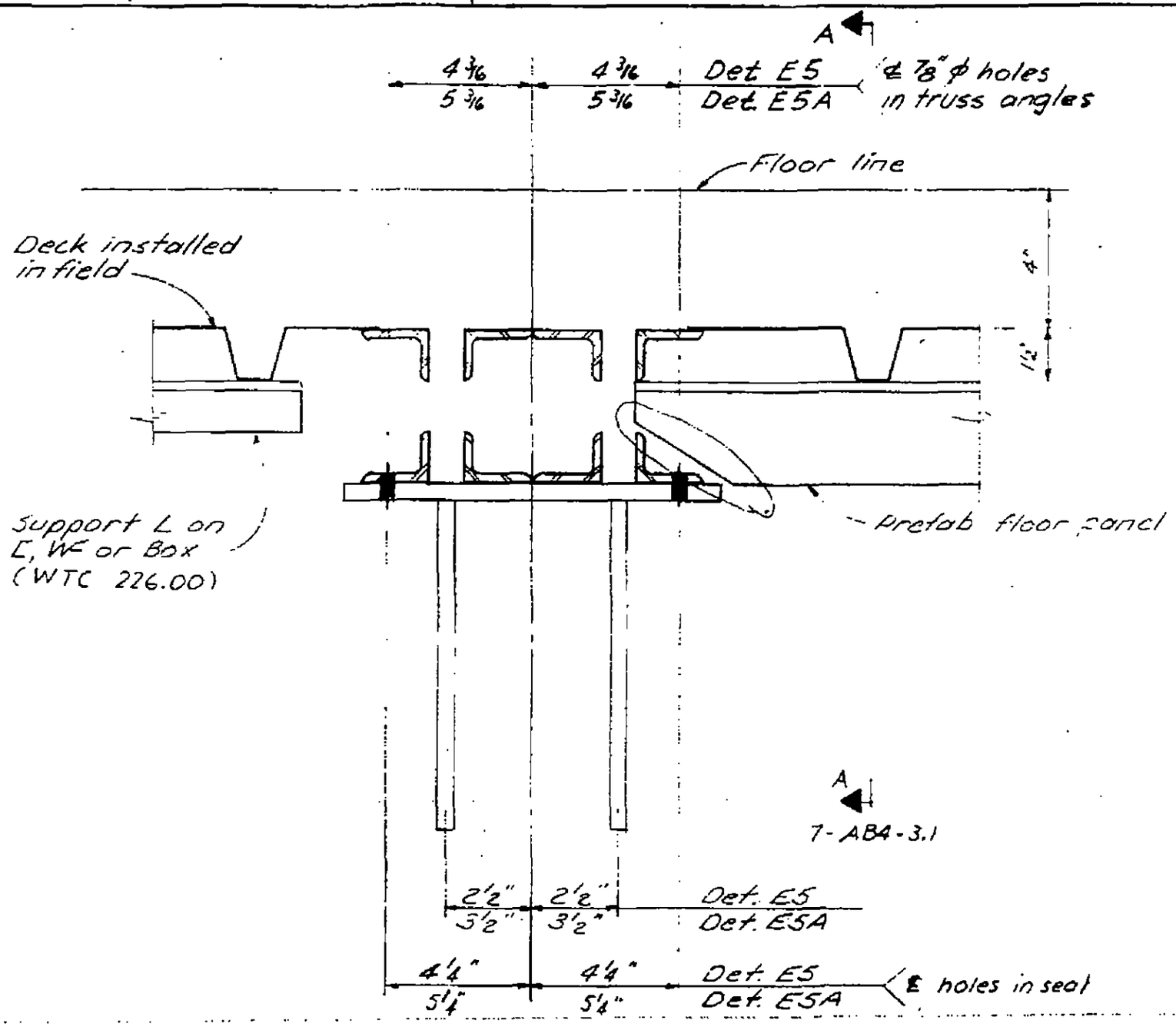

LICENSED PROFESSIONAL ENGINEER LESLIE E. ROBERTSON No. 34360 STATE OF NEW YORK

61

7-AB4-4

SKILLING - HELLE - CHRISTIANSEN - ROBERTSON Structural & Civil Engineers

PROJECT THE WORLD TRADE CENTER | TITLE FLOOR PANEL - DETAIL EG | DATE 1-3-68

REVISIONS

7-22-68

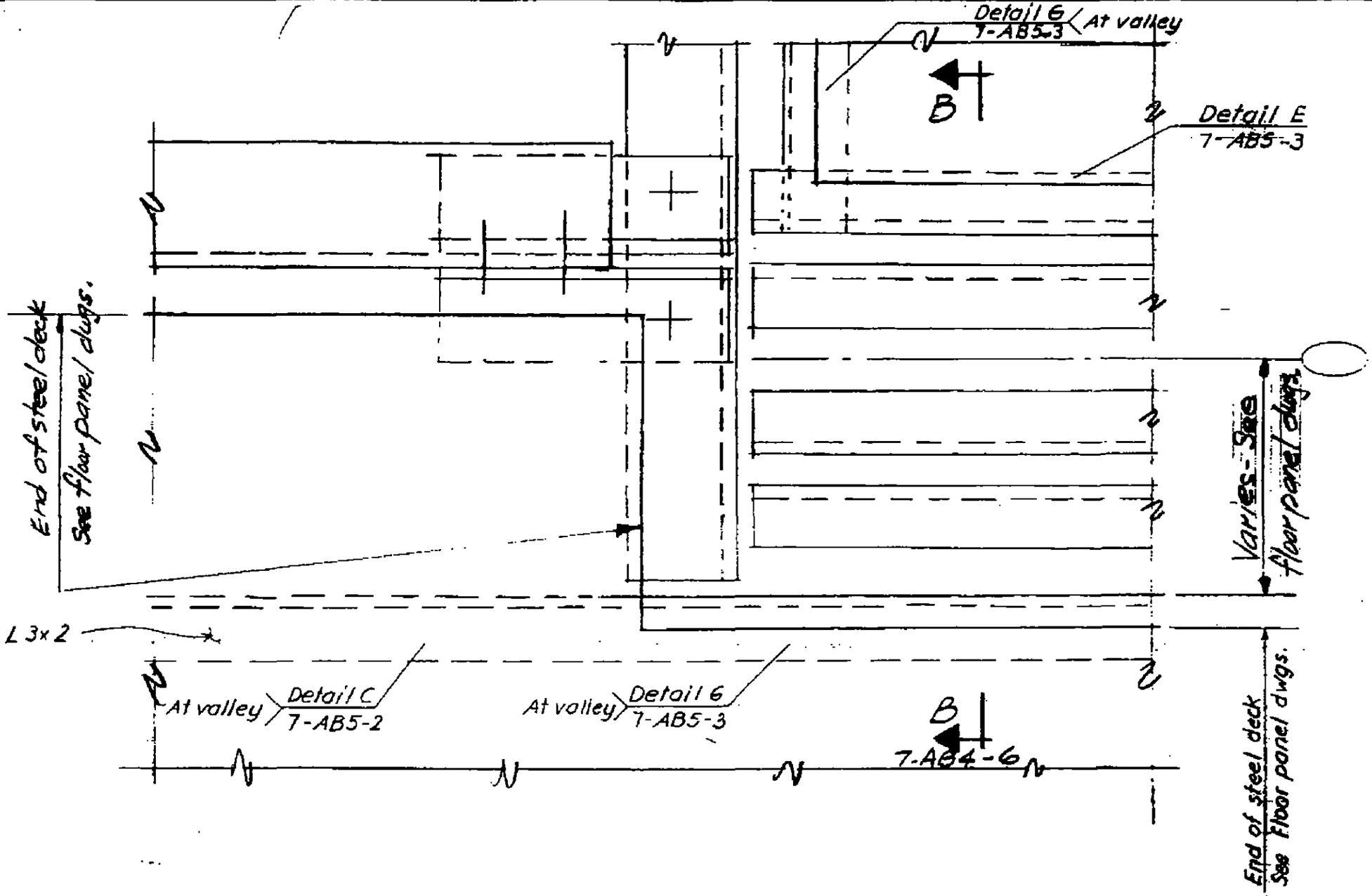

REGISTERED PROFESSIONAL ENGINEER
LESLIE E. ROBERTSON
No. 3456
STATE OF NEW YORK

7-AB4 - 5

SKILLING - HELLE - CHRISTIANSEN - ROBERTSON Structural & Civil Engineers

PROJECT THE WORLD TRADE CENTER | TITLE FLOOR PANEL DETAIL E6 | DATE 1-3-68

REVISIONS

10-15-68

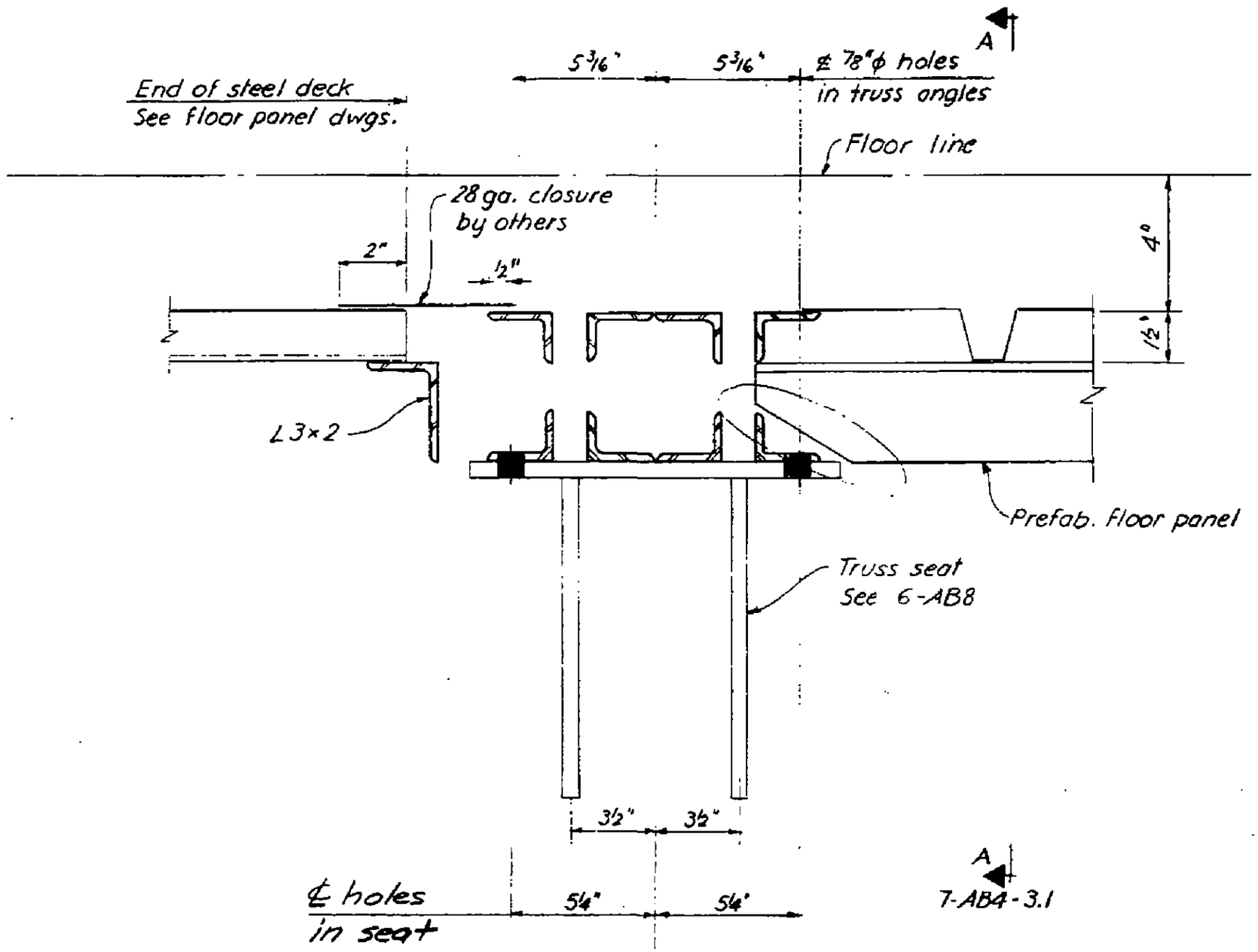

Section B-B

LICENSED PROFESSIONAL ENGINEER
LESLIE E. ROBERTSON
No. 34360
LICENSED TO PRACTICE IN THE STATE OF NEW YORK

7-AB4-6

SKILLING - HELLE - CHRISTIANSEN - ROBERTSON Structural & Civil Engineers

PROJECT THE WORLD TRADE CENTER | TITLE FLOOR PANEL - DETAIL ~~E~~B | DATE ~~1-3-68~~

REVISIONS

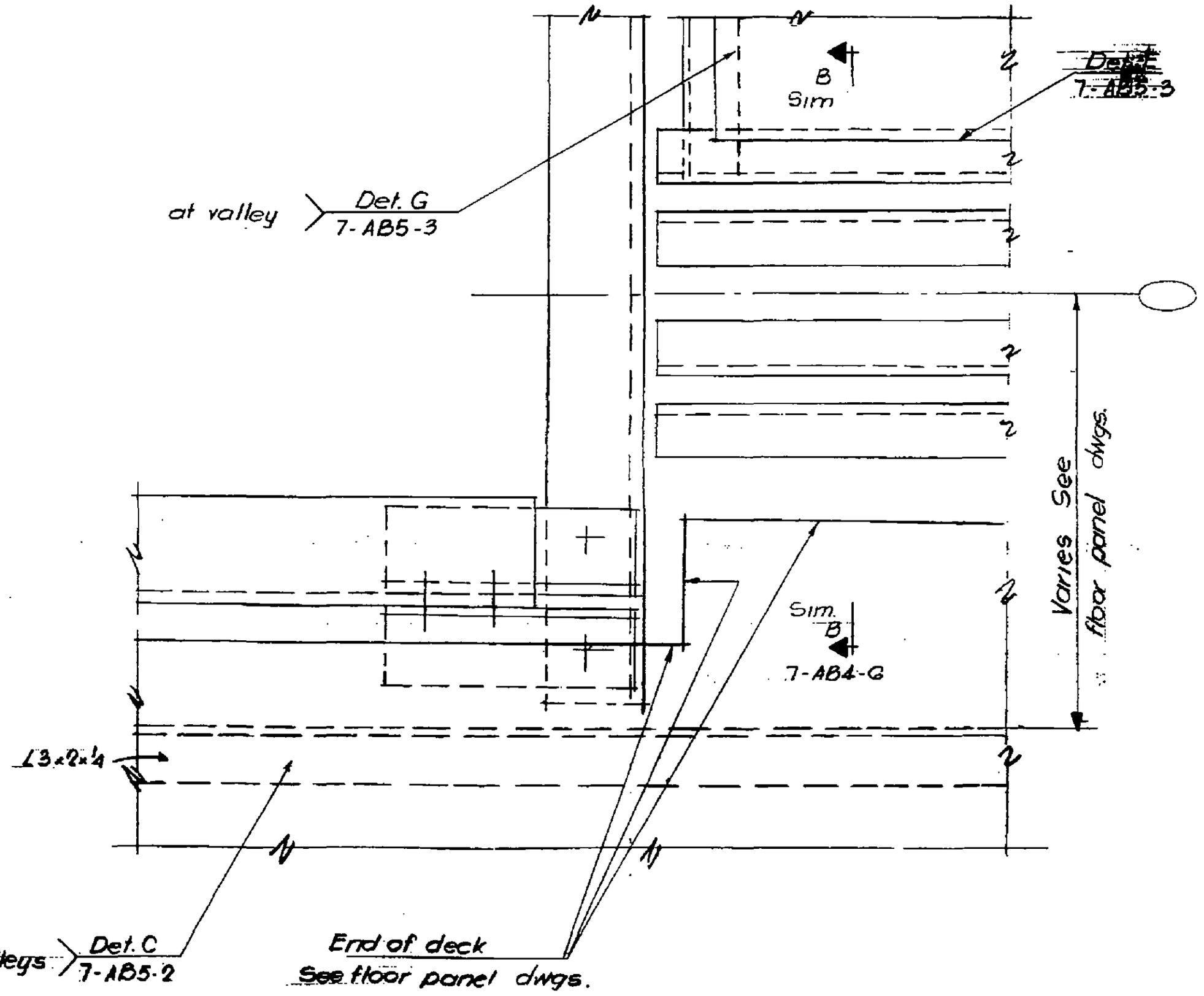

LICENSED PROFESSIONAL ENGINEER
LESLIE E. ROBERTSON
No. 34360
UNIVERSITY OF THE STATE OF NEW YORK

64

7-AB4-7

SKILLING, HELLE, CHRISTIANSEN, ROBERTSON — Structural & Civil Engineers

PROJECT: THE WORLD TRADE CENTER | TITLE: FLOOR PANEL-DETAIL E9, E9A | DATE: 7-22-68

REVISIONS

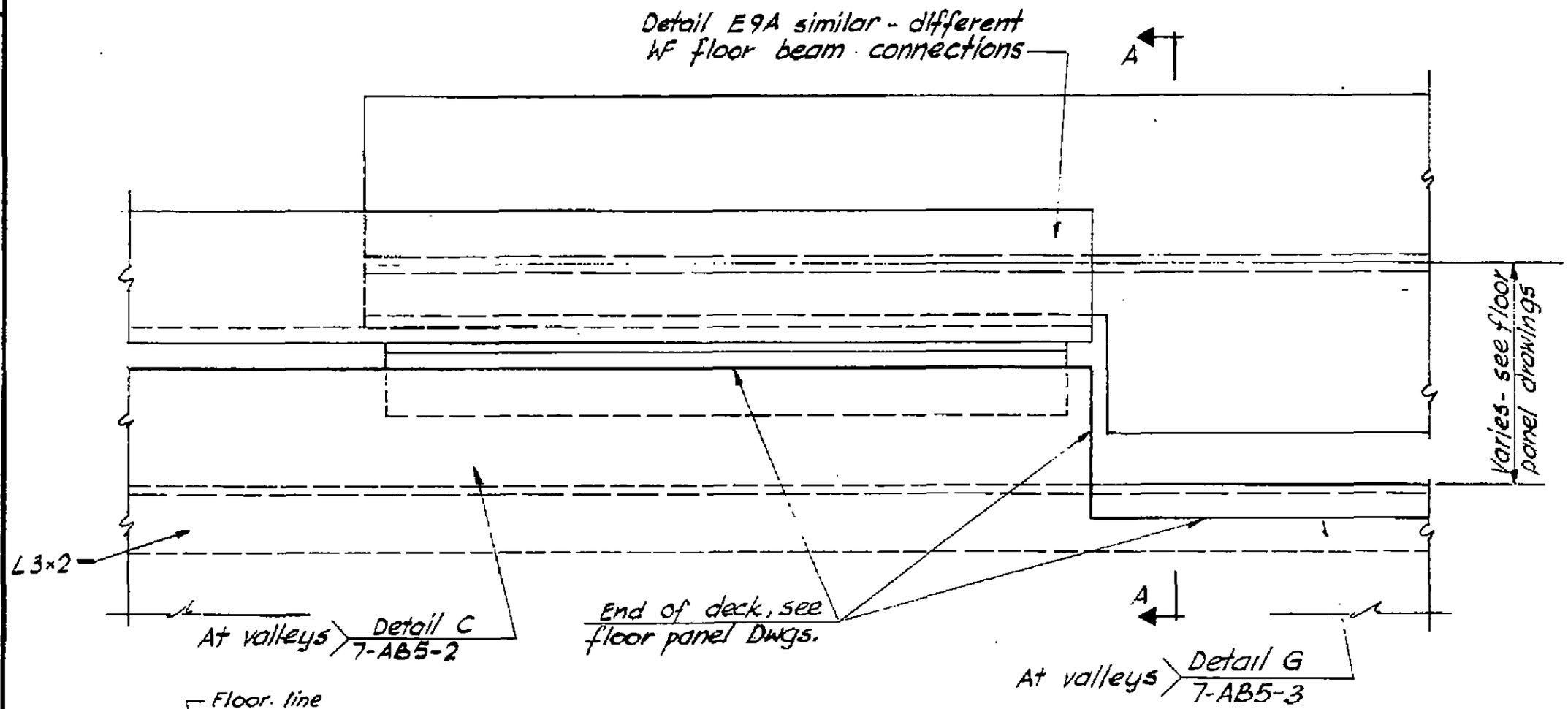

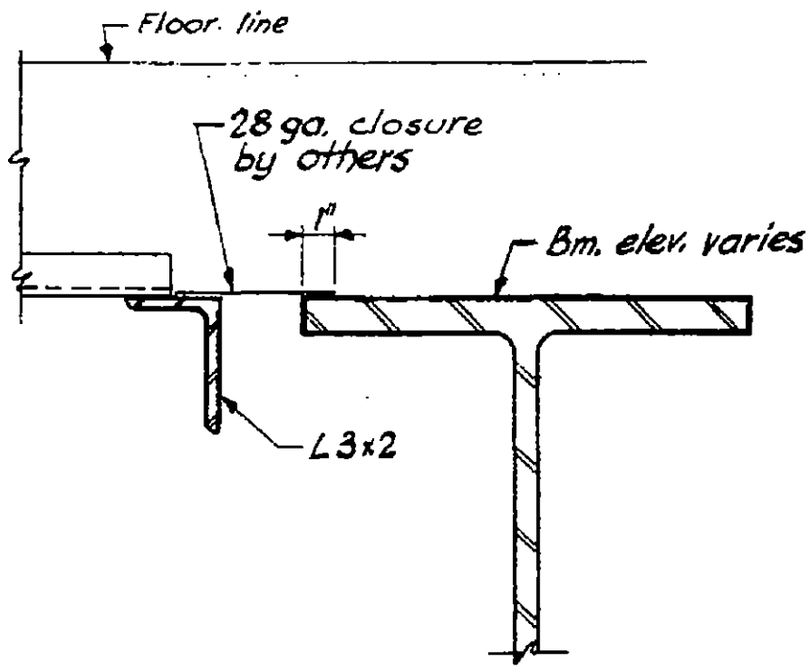

Section A-A

LICENSED PROFESSIONAL ENGINEER — LESLIE E. ROBERTSON — No. 34350 — UNIVERSITY OF THE STATE OF NEW YORK

DESIGNED

DRAWN

REVIEWED

55

7-AB4-8

SKILLING, HELLE, CHRISTIANSEN, ROBERTSON — Structural & Civil Engineers

PROJECT THE WORLD TRADE CENTER | TITLE FLOOR PANEL - DETAIL E 10 | DATE 7-22-68

REVISIONS

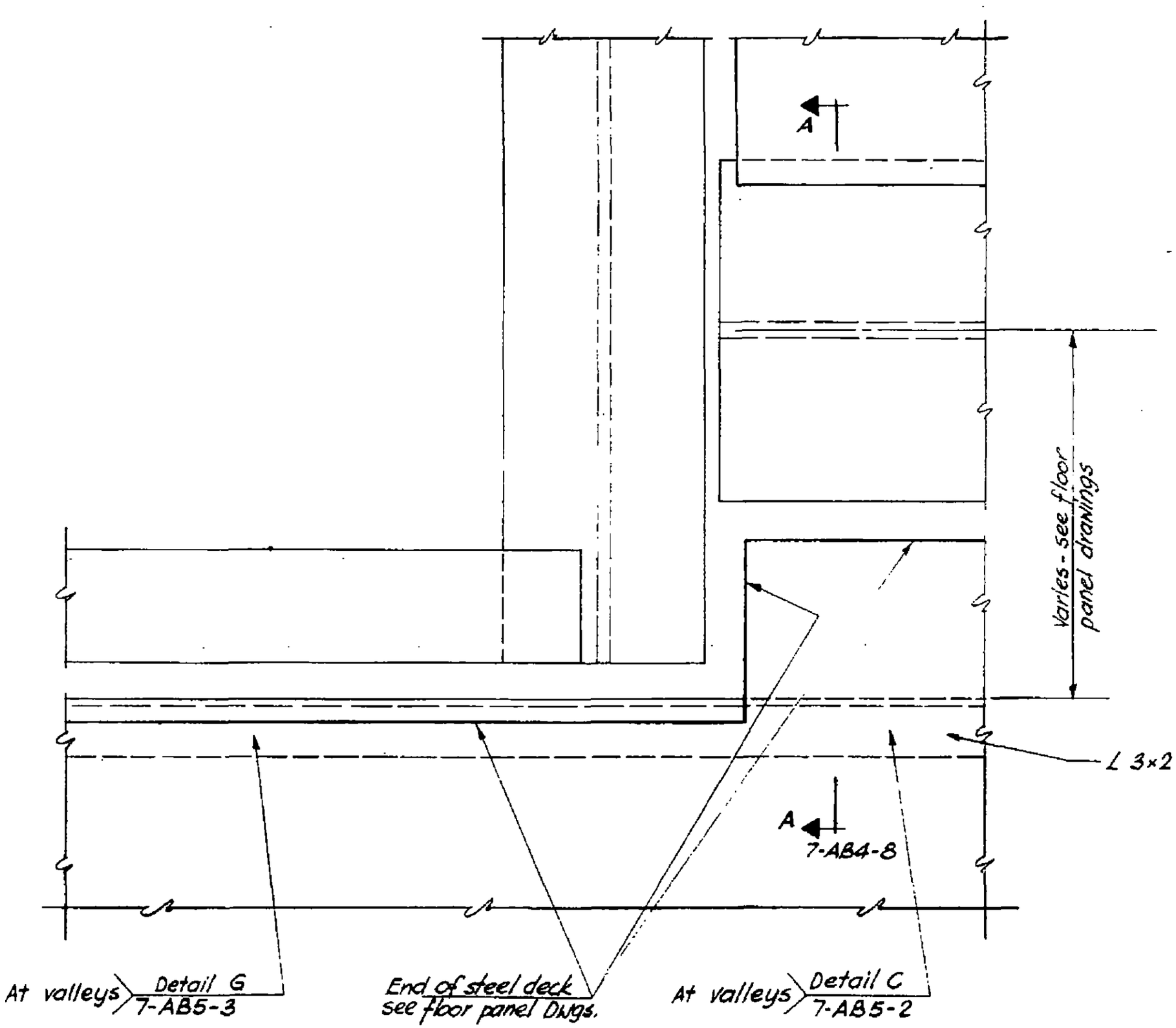

LICENSED PROFESSIONAL ENGINEER
LESLIE E. ROBERTSON
No. 34610
UNIVERSITY OF [illegible]

DESIGNED

DRAWN

REVIEWED

56

7-AB4-9

SKILLING, HELLE, CHRISTIANSEN, ROBERTSON — Structural & Civil Engineers

PROJECT: THE WORLD TRADE CENTER | TITLE: FLOOR TRUSS - DETAIL E11 | DATE: 8-15-68

REVISIONS

10-4-68
12-20-68

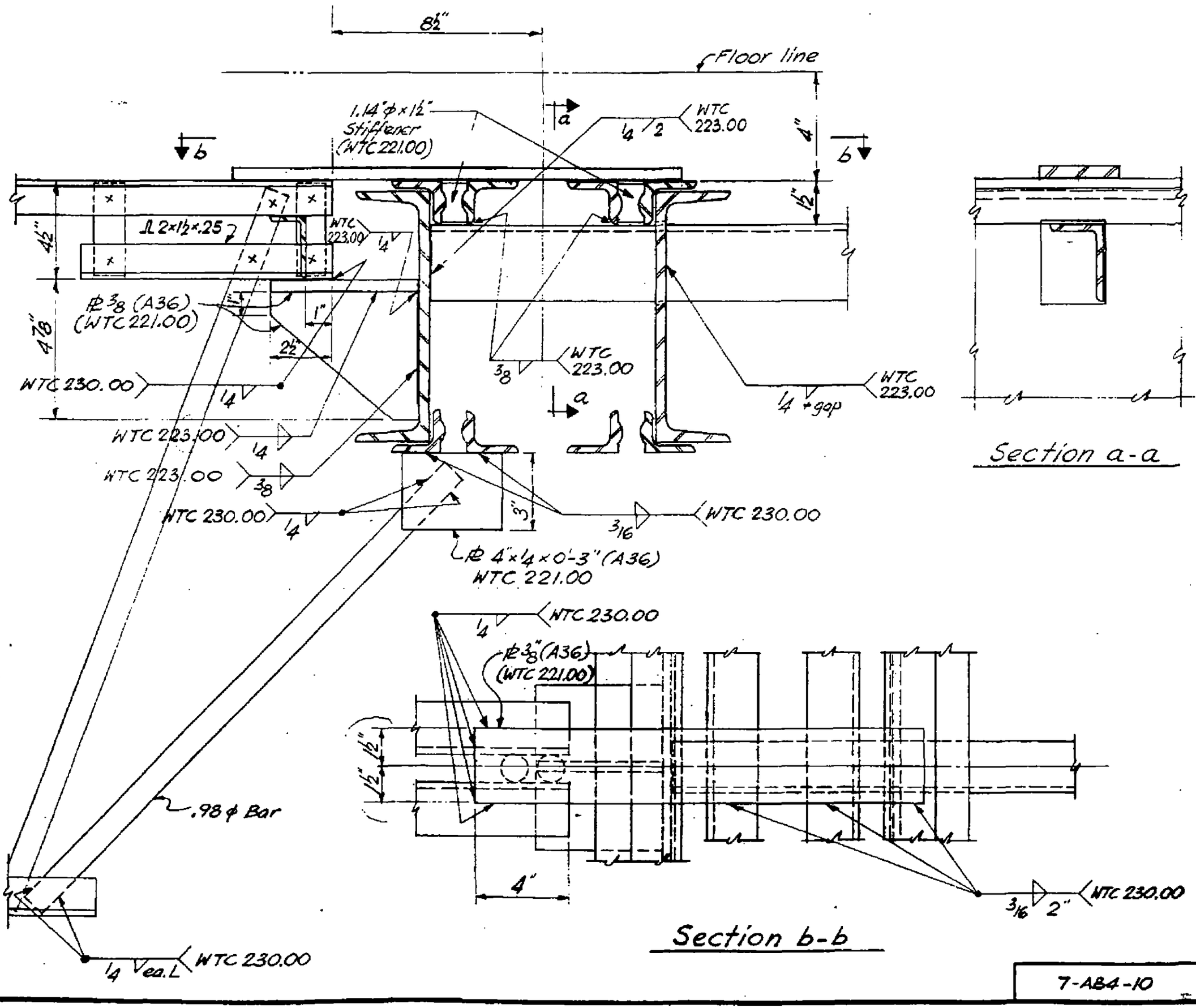

LICENSED PROFESSIONAL ENGINEER — LESLIE E. ROBERTSON — No. 34360 — UNIVERSITY OF THE STATE OF NEW YORK

DESIGNED

DRAWN

REVIEWED

7-AB4-10

SKILLING - HELLE - CHRISTIANSEN - ROBERTSON Structural & Civil Engineers

PROJECT THE WORLD TRADE CENTER | TITLE FLOOR TRUSS DETAIL E12 | DATE 1-3-68

REVISIONS

5-6-68
7-22-68

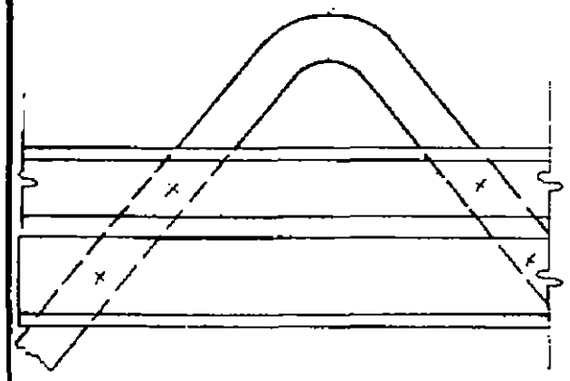

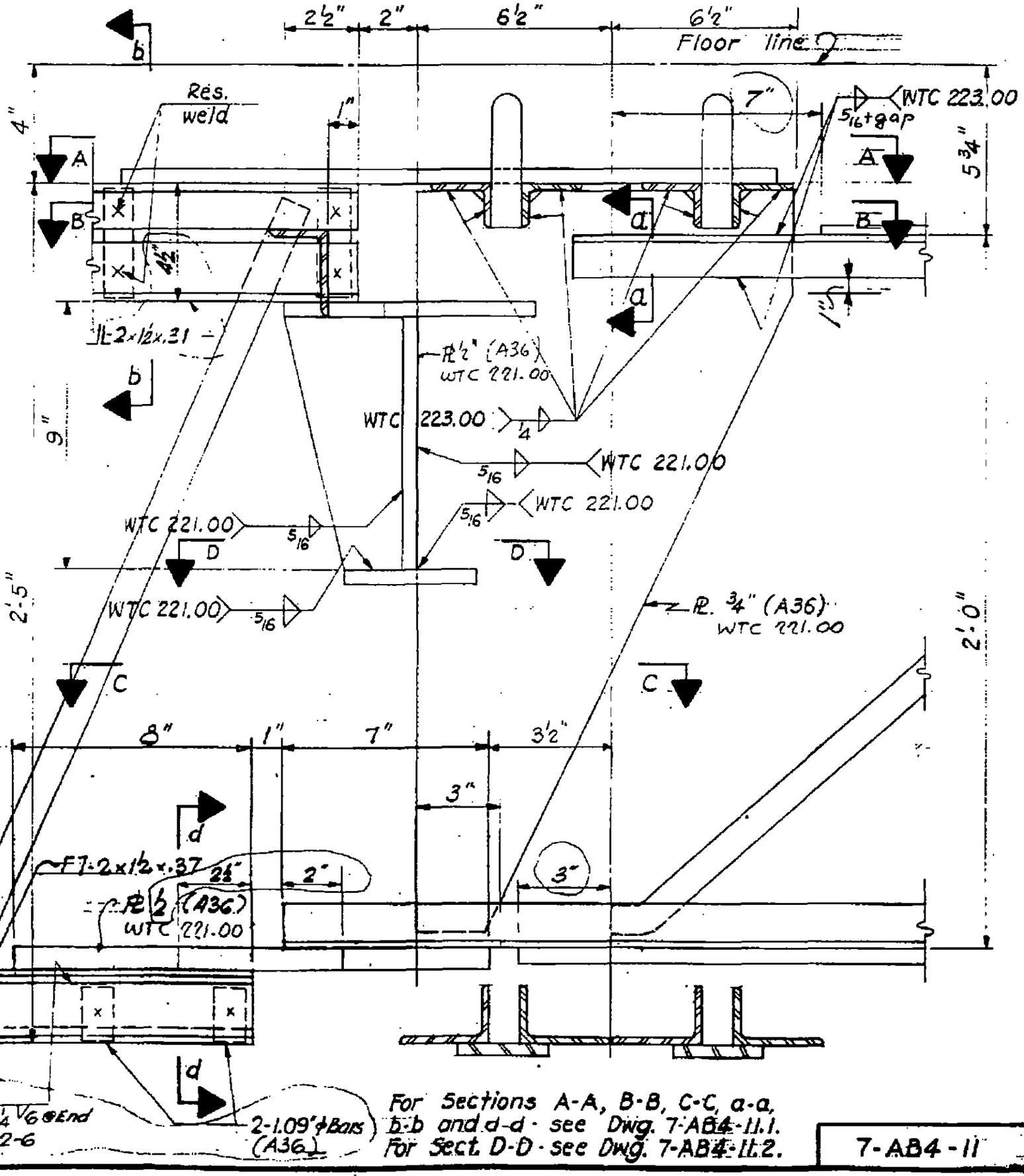

Note:
Truss fabricator to control depth tolerance to produce proper fit.

For Sections A-A, B-B, C-C, a-a, b-b and d-d · see Dwg. 7-AB4-11.1.
For Sect. D-D · see Dwg. 7-AB4-11.2.

7-AB4-11

51

SKILLING - HELLE - CHRISTIANSEN - ROBERTSON Structural & Civil Engineers

PROJECT THE WORLD TRADE CENTER | TITLE FLOOR TRUSS DETAIL E12, E13 | DATE 5-6-68

REVISIONS

7-22-68

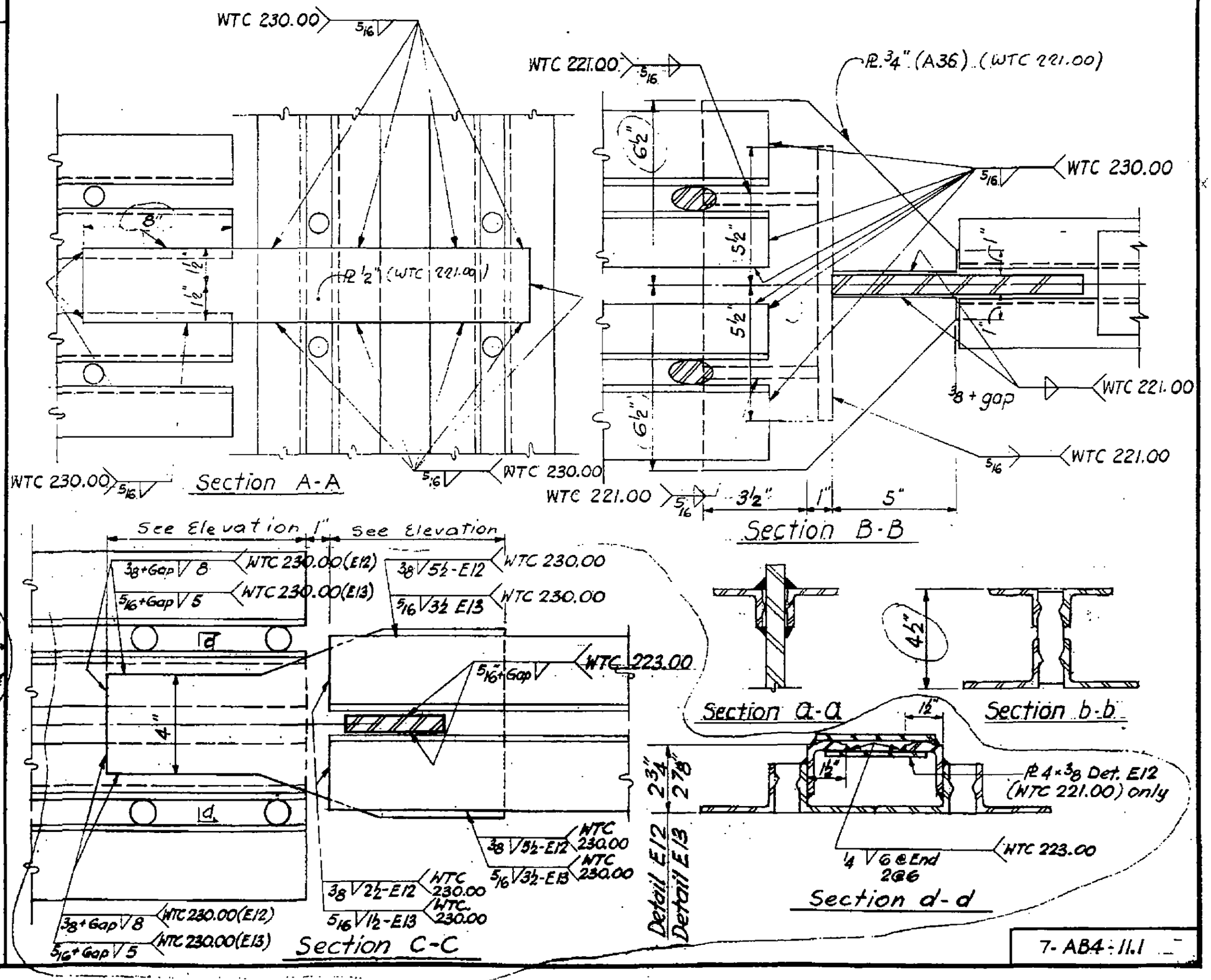

LICENSED PROFESSIONAL ENGINEER LESLIE E. ROBERTSON No. 34480 UNIVERSITY OF THE STATE OF NEW YORK

7-AB4-11.1

58

SKILLING - HELLE - CHRISTIANSEN - ROBERTSON Structural & Civil Engineers

PROJECT THE WORLD TRADE CENTER | TITLE FLOOR TRUSS DETAIL E13 | DATE 5-6-68

REVISIONS

7-22-68

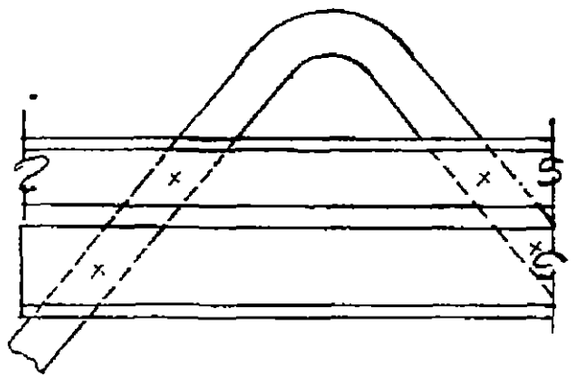

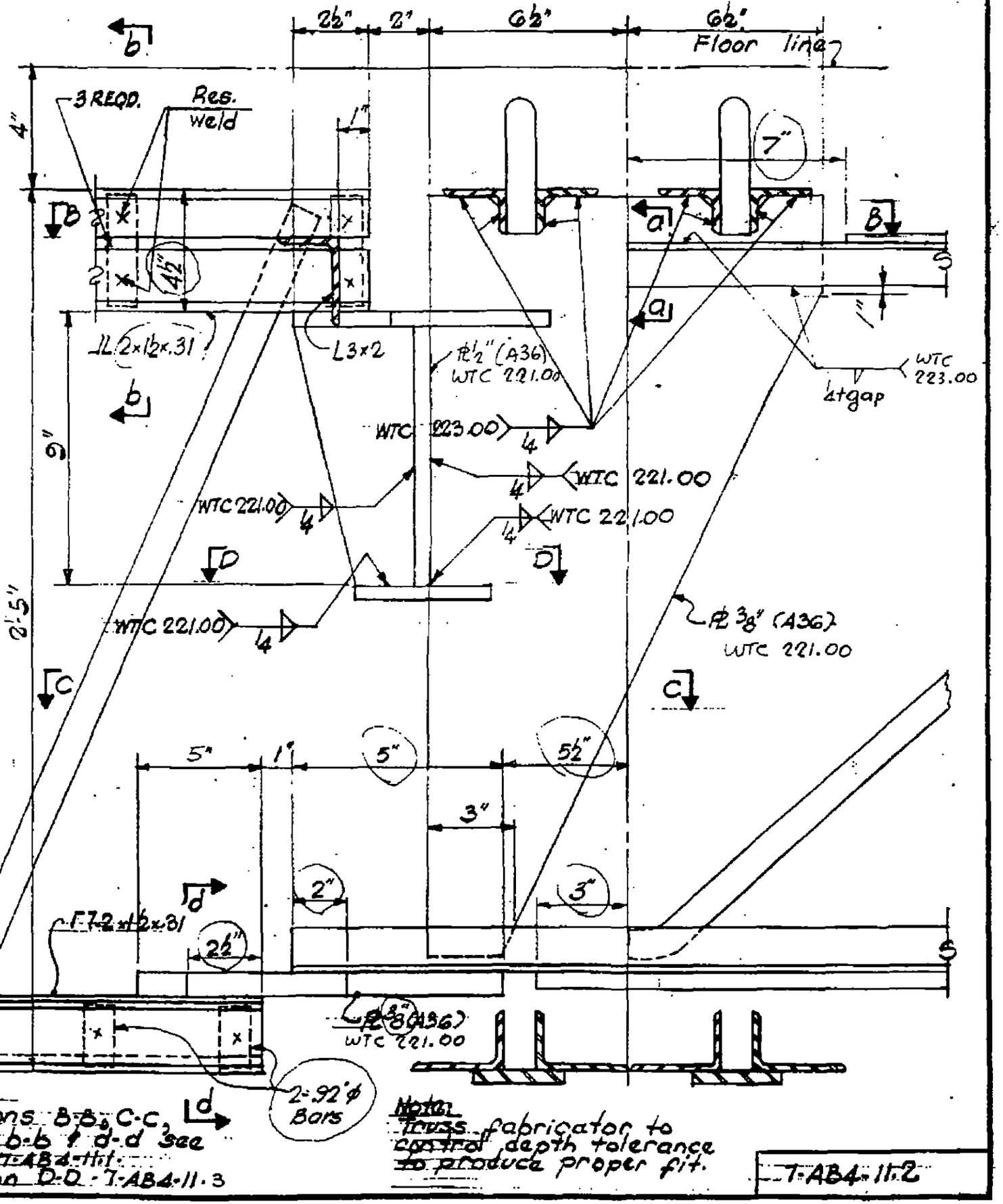

Note: Sections B-B, C-C, a-a, b-b & d-d See dwg. T-AB4-11.1 Section D-D - T-AB4-11.3

Note: Truss fabricator to control depth tolerance to produce proper fit.

T-AB4-11.2

LICENSED PROFESSIONAL ENGINEER LESLIE E. ROBERTSON STATE OF NEW YORK

59

SKILLING - HELLE - CHRISTIANSEN - ROBERTSON Structural & Civil Engineers

PROJECT THE WORLD TRADE CENTER | TITLE FLOOR TRUSS DETAIL E12, E13, E17, E18 | DATE 5-6-68

REVISIONS

7-22-68

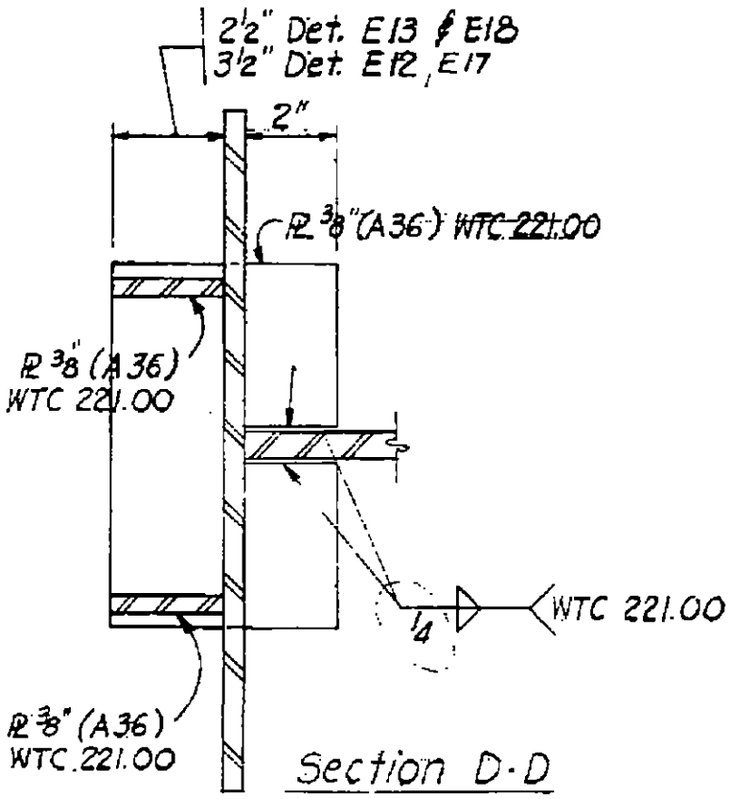

Section D-D

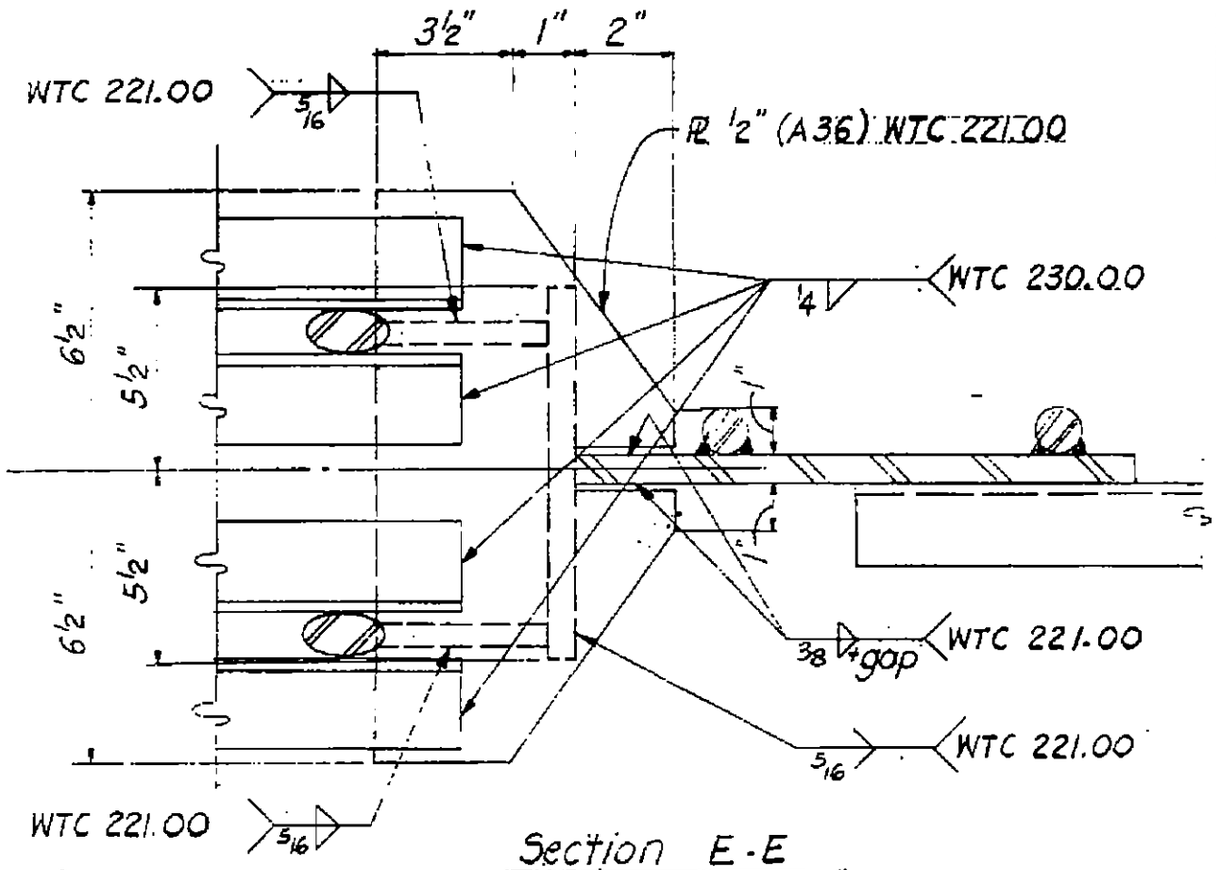

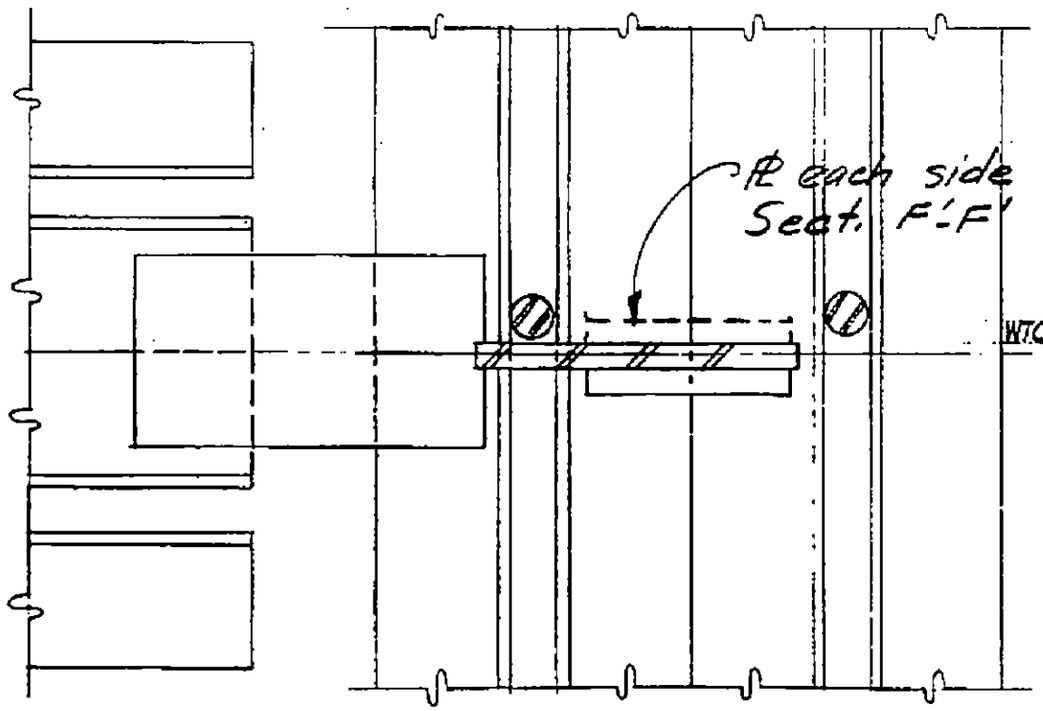

Section F-F
Section F'-F' as noted

Section E-E

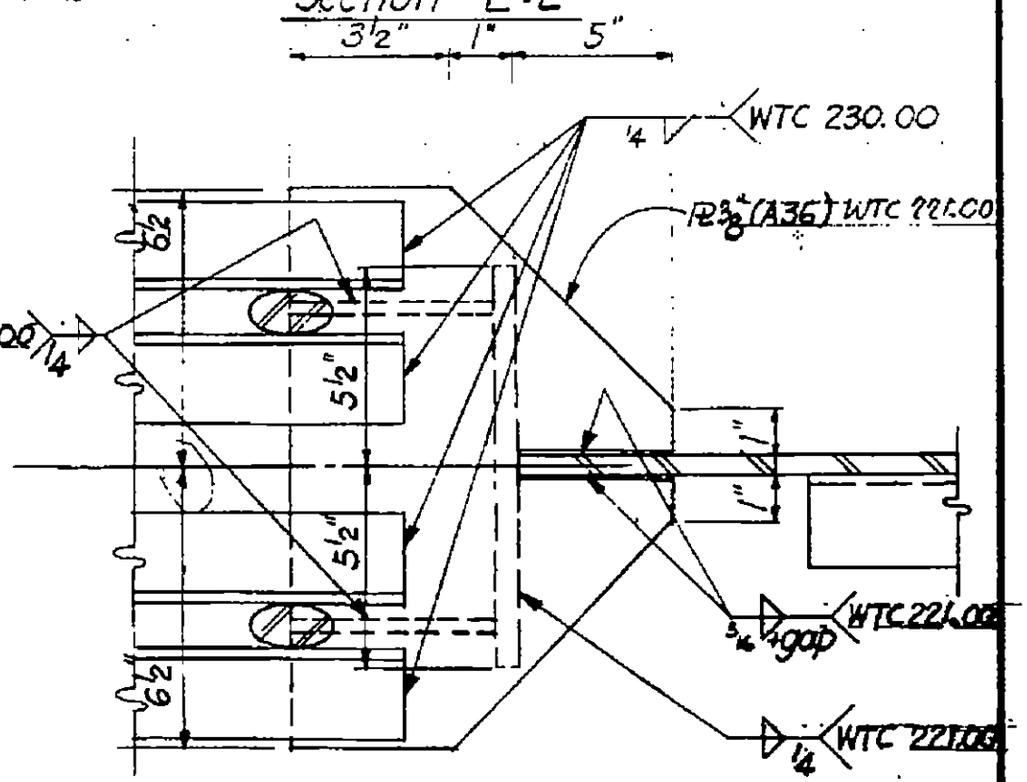

Section G-G

7-AB4-11.3

60

SKILLING - HELLE - CHRISTIANSEN - ROBERTSON Structural & Civil Engineers

PROJECT THE WORLD TRADE CENTER | TITLE FLOOR TRUSSES - DETAIL E16 | DATE 1-3-68

REVISIONS
5-6-68
7-22-68

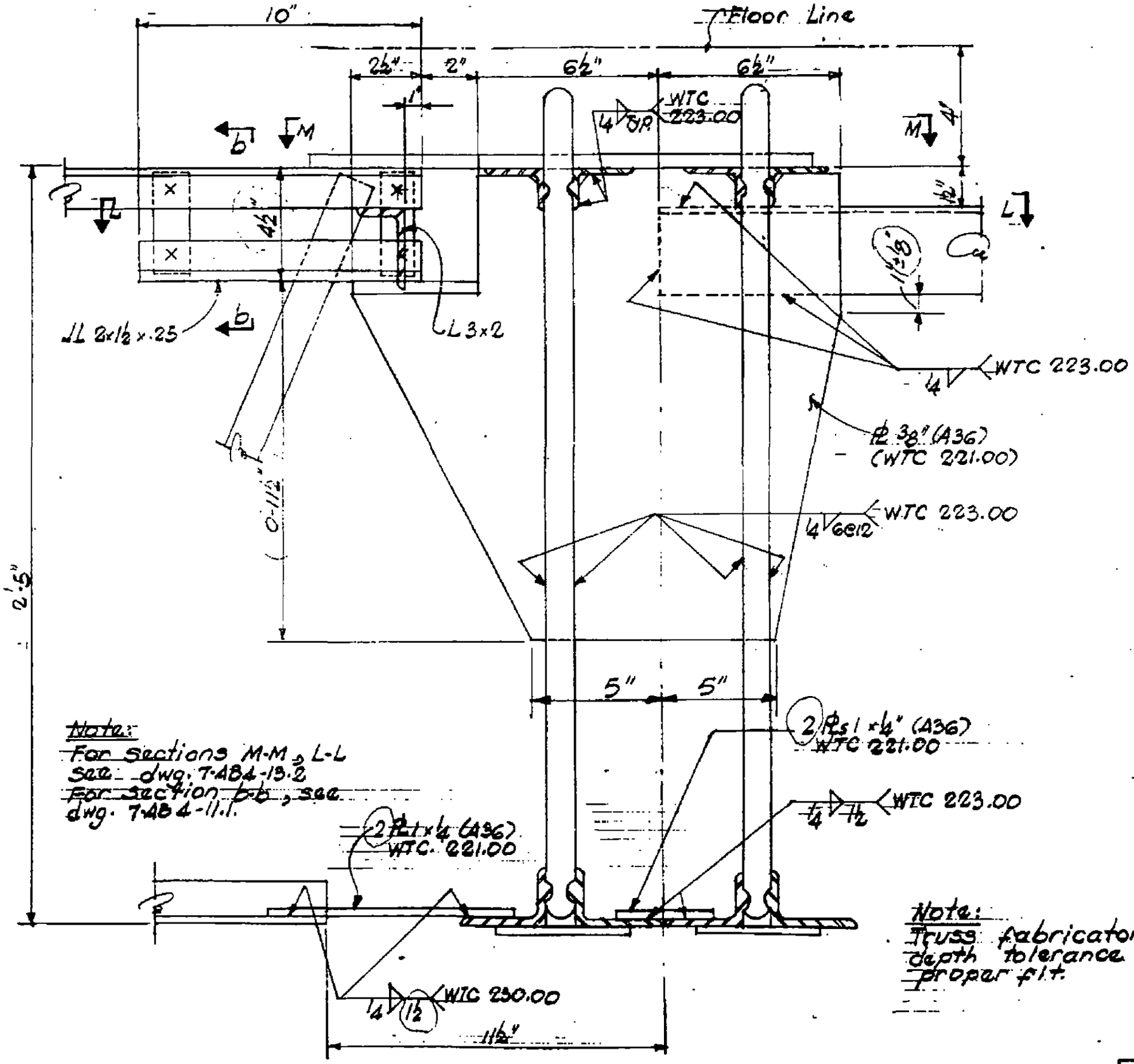

Note:
For Sections M-M & L-L see dwg. 7-484-13.2
For Section b-b, see dwg. 7-484-11.1.

Note:
Truss fabricator to control depth tolerance to produce proper fit.

LICENSED PROFESSIONAL ENGINEER
LESLIE E. ROBERTSON
No. 84360
UNIVERSITY OF THE STATE OF NEW YORK

7-484-12

SKILLING - HELLE - CHRISTIANSEN - ROBERTSON Structural & Civil Engineers

PROJECT THE WORLD TRADE CENTER | TITLE FLOOR TRUSS DETAIL E17 | DATE 1-3-68

REVISIONS

5-6-68
7-22-68

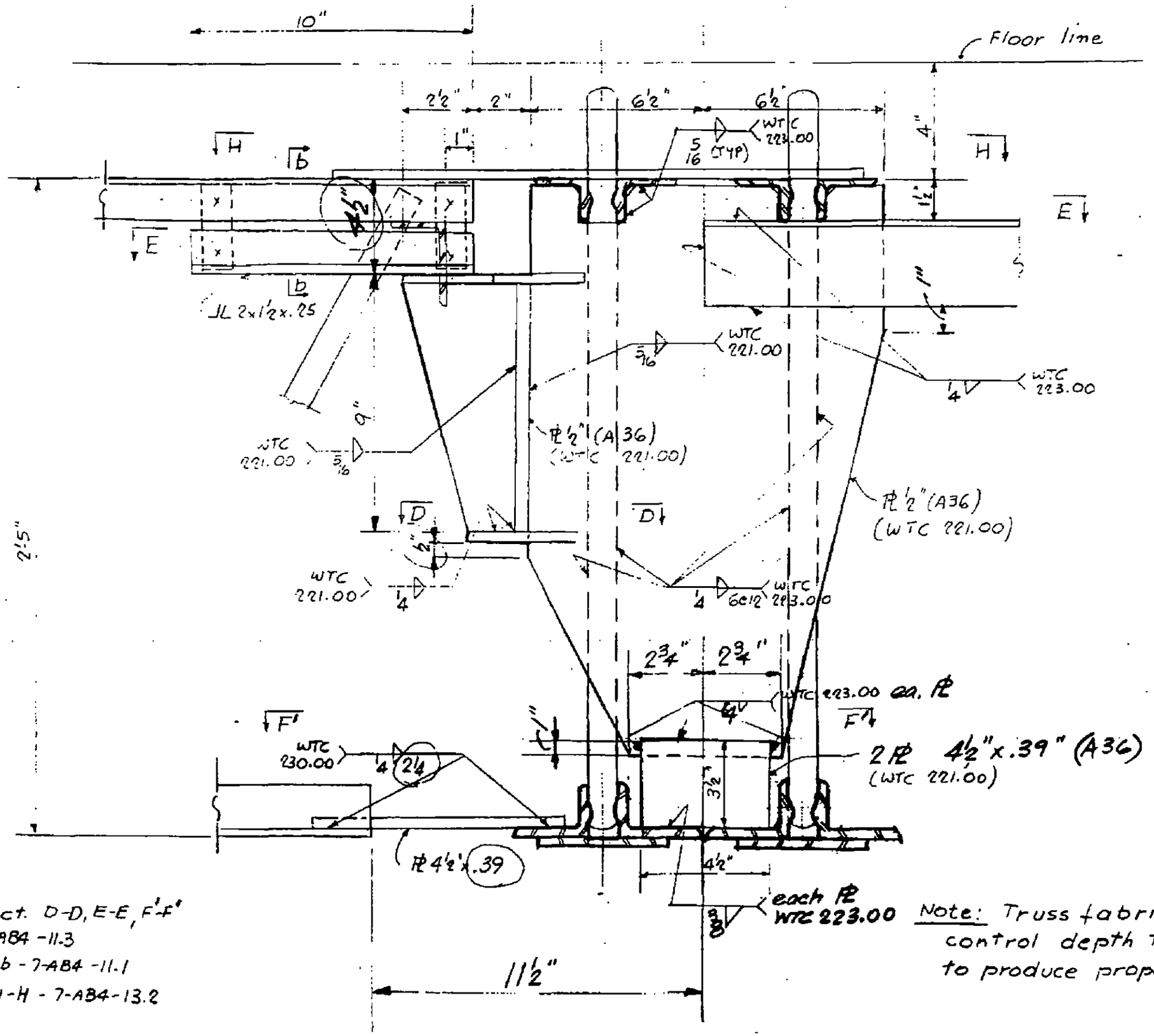

For Sect. D-D, E-E, F'-F'
See 7-AB4-11.3
Sect. b-b - 7-AB4-11.1
Sect. H-H - 7-AB4-13.2

Note: Truss fabricator to control depth tolerance to produce proper fit

LICENSED PROFESSIONAL ENGINEER
LESLIE E. ROBERTSON
UNIVERSITY OF [illegible]

SKILLING - HELLE - CHRISTIANSEN - ROBERTSON Structural & Civil Engineers

PROJECT THE WORLD TRADE CENTER | TITLE FLOOR TRUSSES DETAIL E 18 | DATE 5-6-68

REVISIONS

7-22-68

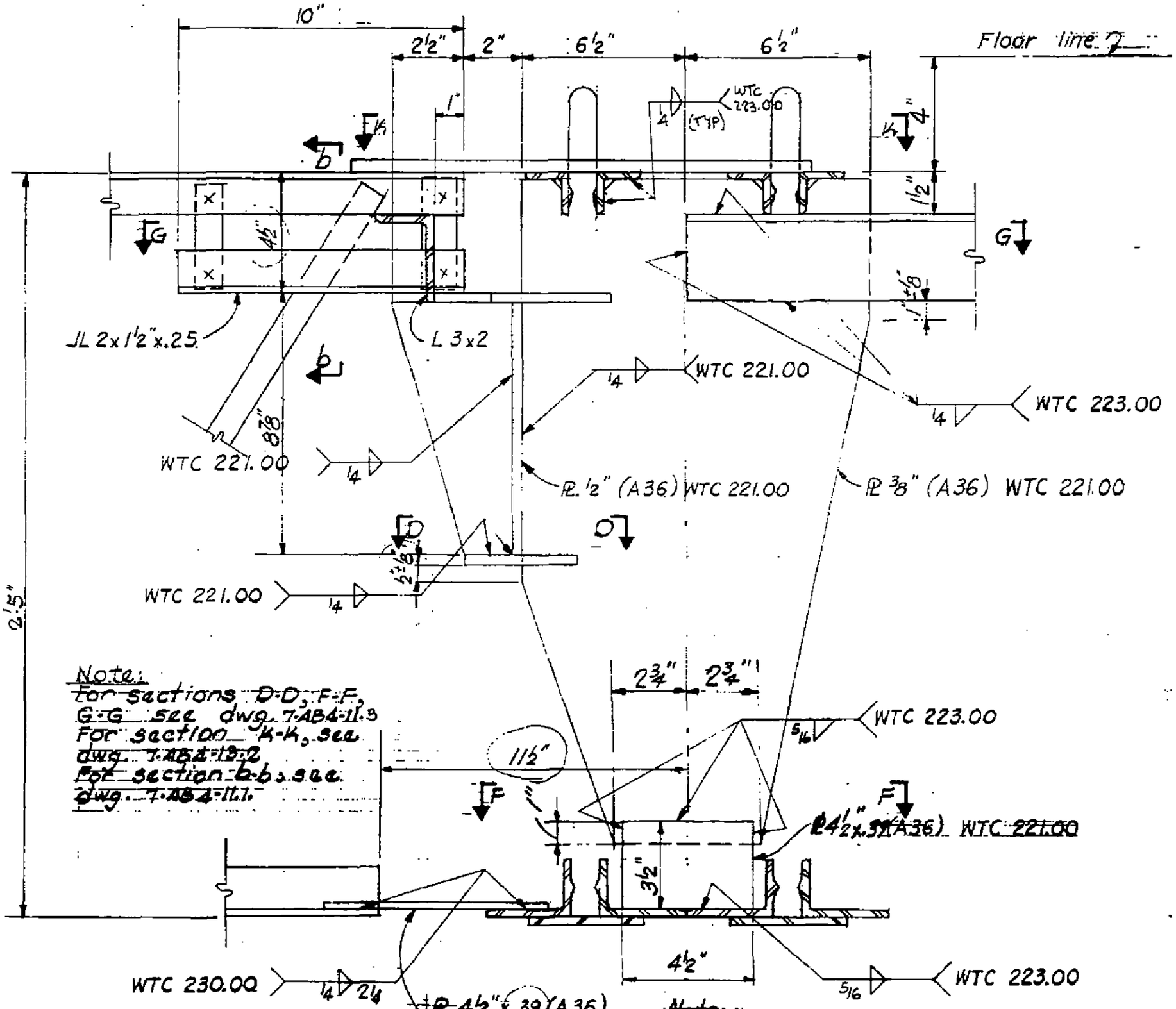

Note:
For sections D-D, F-F, G-G see dwg. 7-AB4-11.3
For section K-K, see dwg. 7-AB4-13.2
For section b-b, see dwg. 7-AB4-11.1.

Note:
Truss fabricator to control depth tolerance to produce proper fit

LICENSED PROFESSIONAL ENG. LESLIE E. ROBERTSON NO. [illegible] STATE OF [illegible]

7-AB4-13.1

SKILLING - HELLE - CHRISTIANSEN - ROBERTSON Structural & Civil Engineers

PROJECT THE WORLD TRADE CENTER | TITLE FLOOR TRUSSES - DETAILS E17, E18, E16 | DATE 5-6-68

REVISIONS

7-22-68
10-15-68

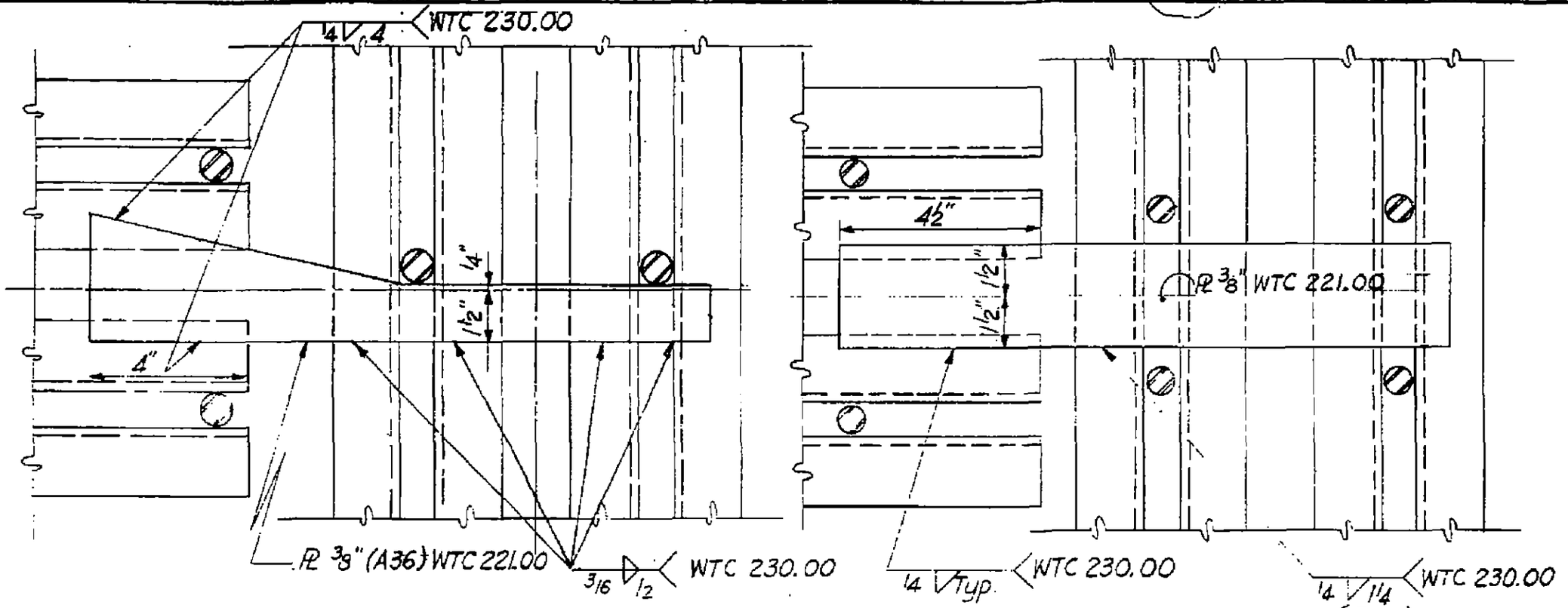

Section H-H

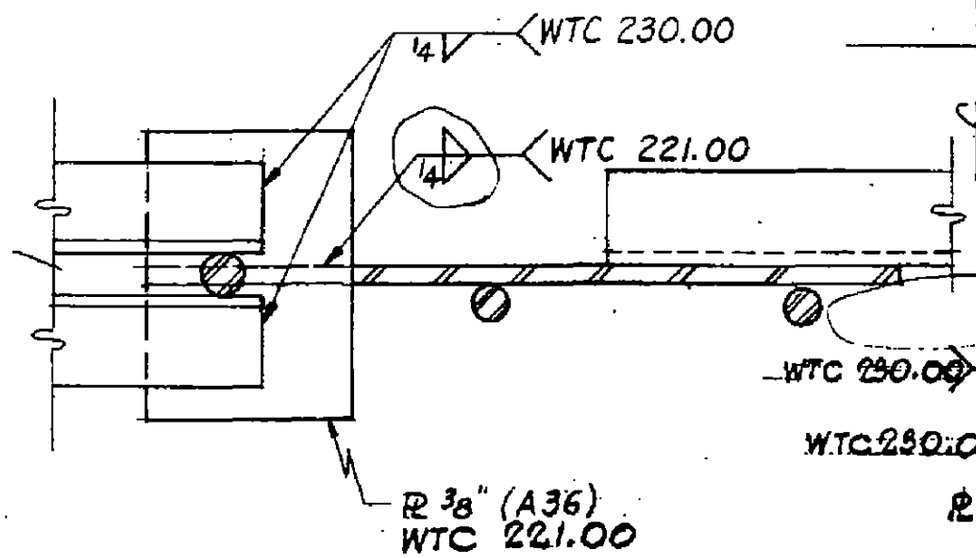

Section L-L

Section K-K

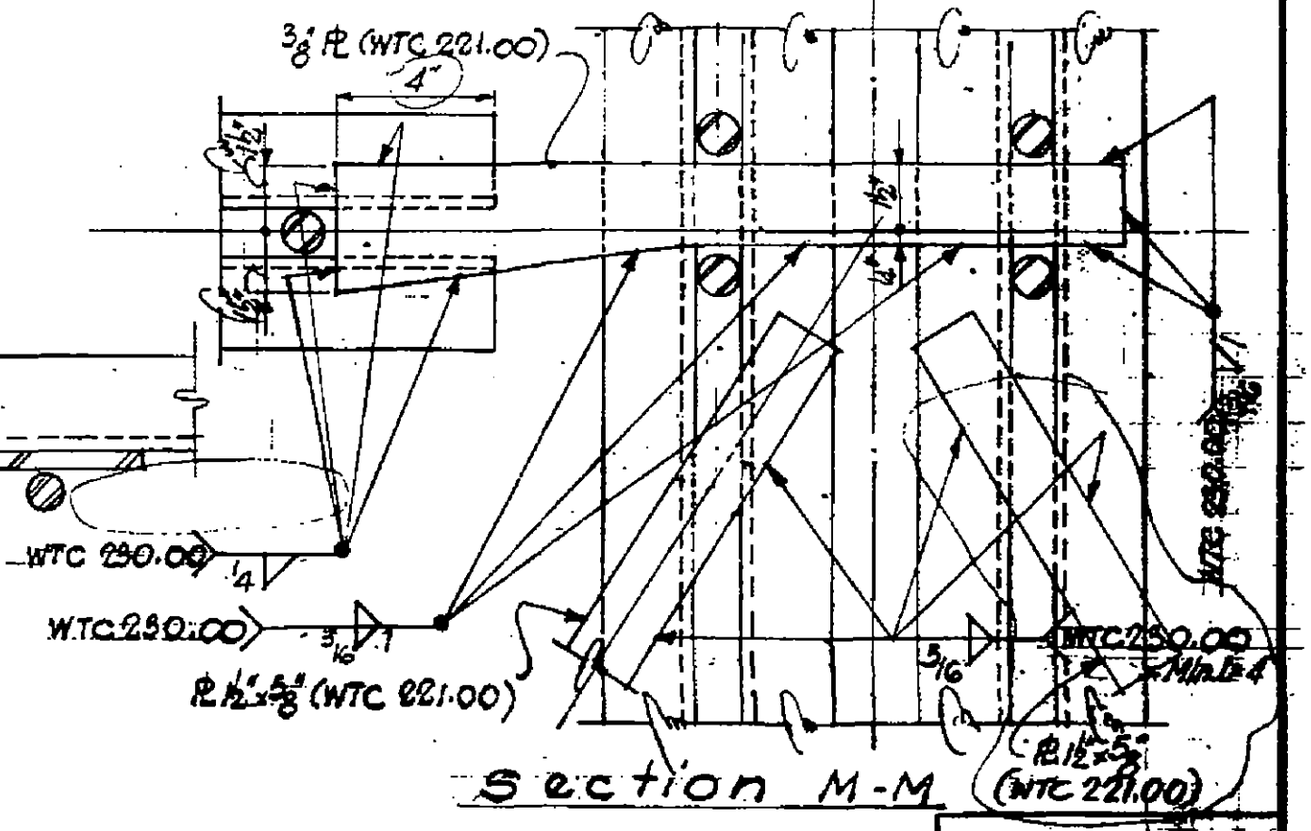

Section M-M

T-AB4-13.2

LICENSED PROFESSIONAL ENGINEER LESLIE E. ROBERTSON No. 34800 STATE OF NEW YORK UNIVERSITY OF THE STATE OF NEW YORK

SKILLING - HELLE - CHRISTIANSEN - ROBERTSON Structural & Civil Engineers

PROJECT THE WORLD TRADE CENTER | TITLE FLOOR PANEL DETAIL E19, E21, E22 | DATE 1-3-68

REVISIONS

10-15-68

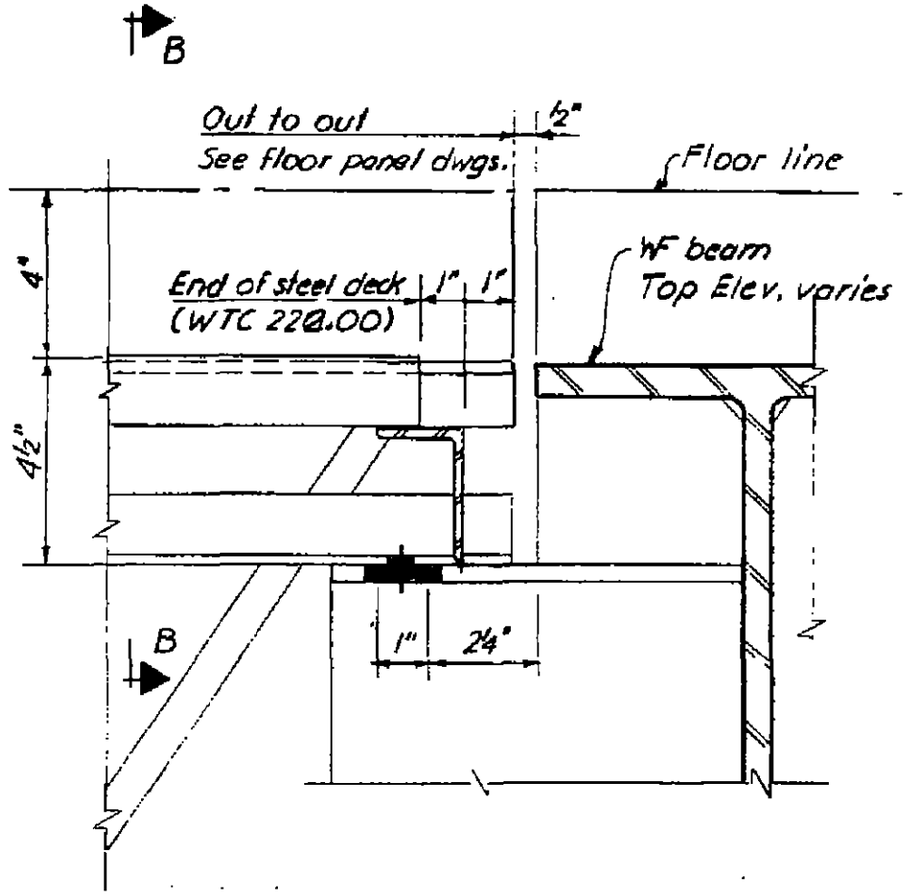

Section A-A

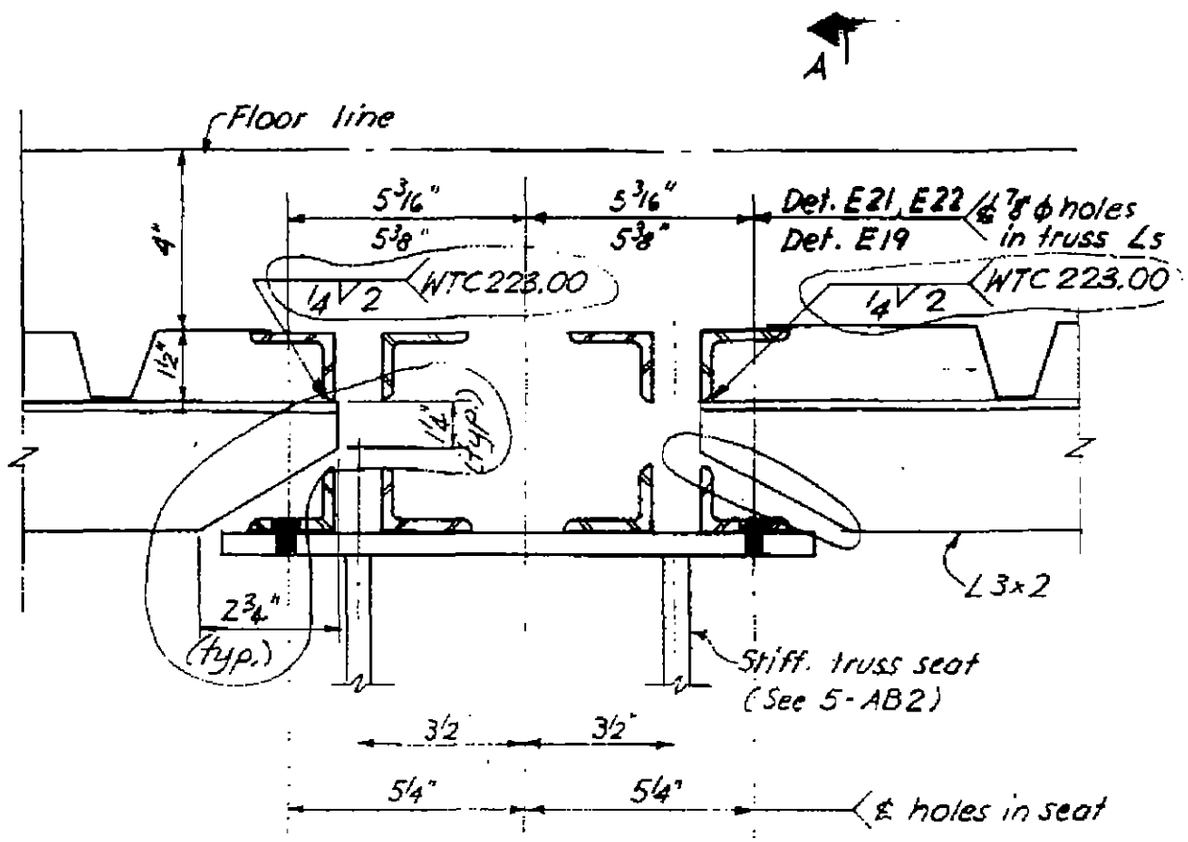

Section B-B

LICENSED PROFESSIONAL ENGINEER
LESLIE E. ROBERTSON
No. 34960
STATE OF NEW YORK

7-AB4-14

SKILLING - HELLE - CHRISTIANSEN - ROBERTSON Structural & Civil Engineers

PROJECT THE WORLD TRADE CENTER TITLE [redacted] PANEL DETAILS DATE 7-3-68

REVISIONS

7-22-68
10-15-68

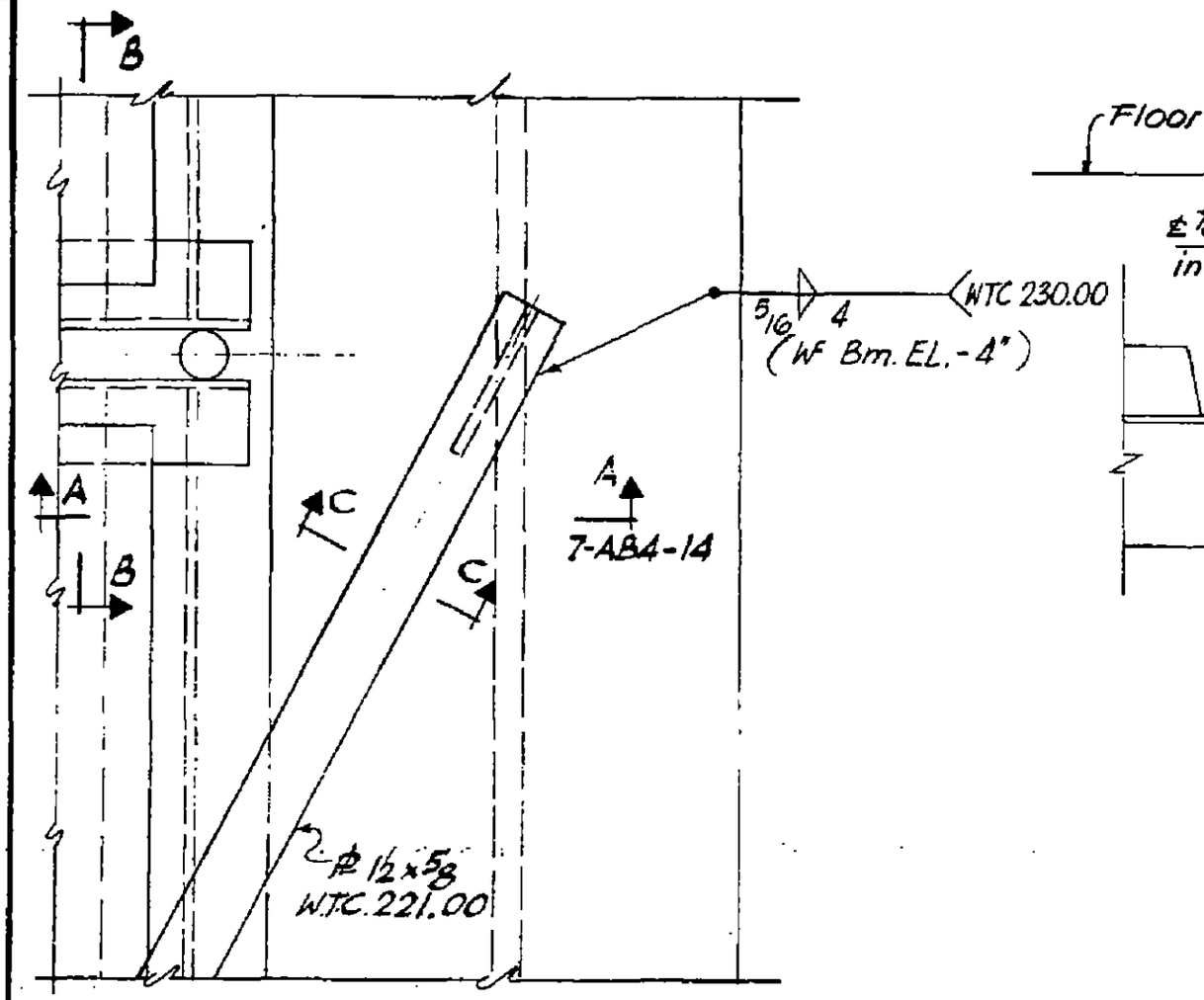

PLAN

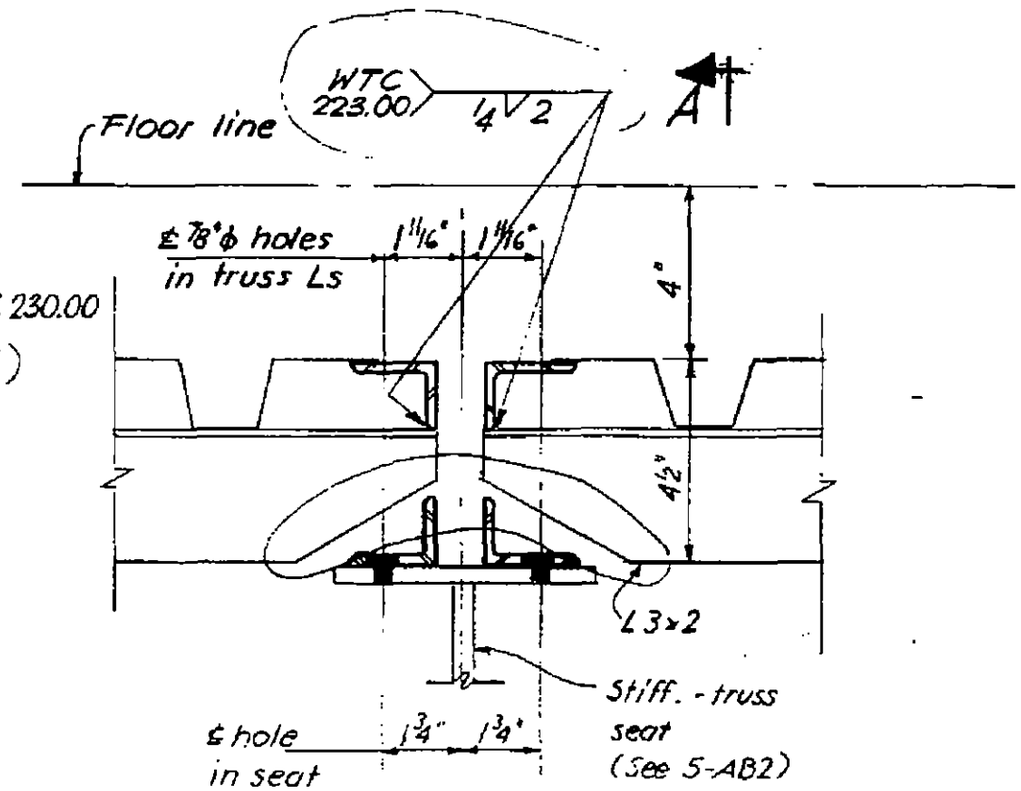

Section B-B

A
7-AB4-14

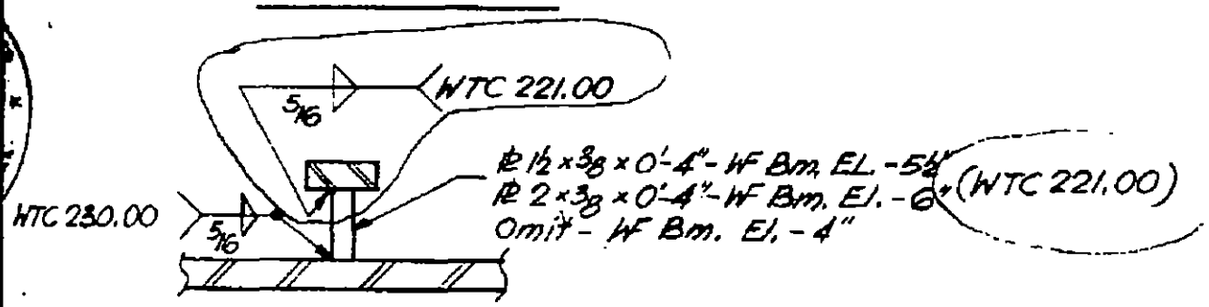

Section C-C

LICENSED PROFESSIONAL ENGINEER
LESLIE E. ROBERTSON
No. 34360
UNIVERSITY OF THE STATE OF NEW YORK

SKILLING - HELLE - CHRISTIANSEN - ROBERTSON Structural & Civil Engineers

PROJECT THE WORLD TRADE CENTER | TITLE FLOOR PANEL-DETAIL E 23 & E 24 | DATE 10-27-67

REVISIONS

1-3-68
5-6-68
7-22-68

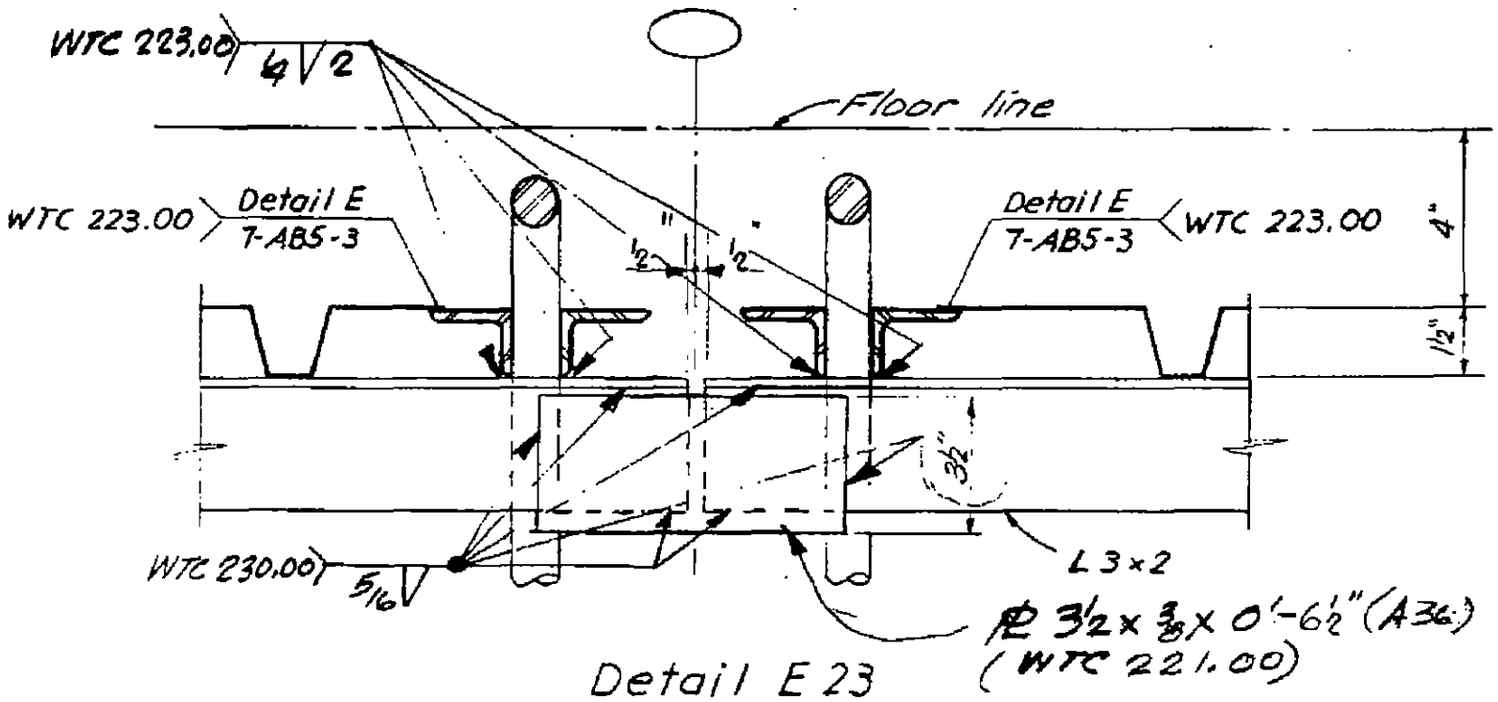

Detail E 23

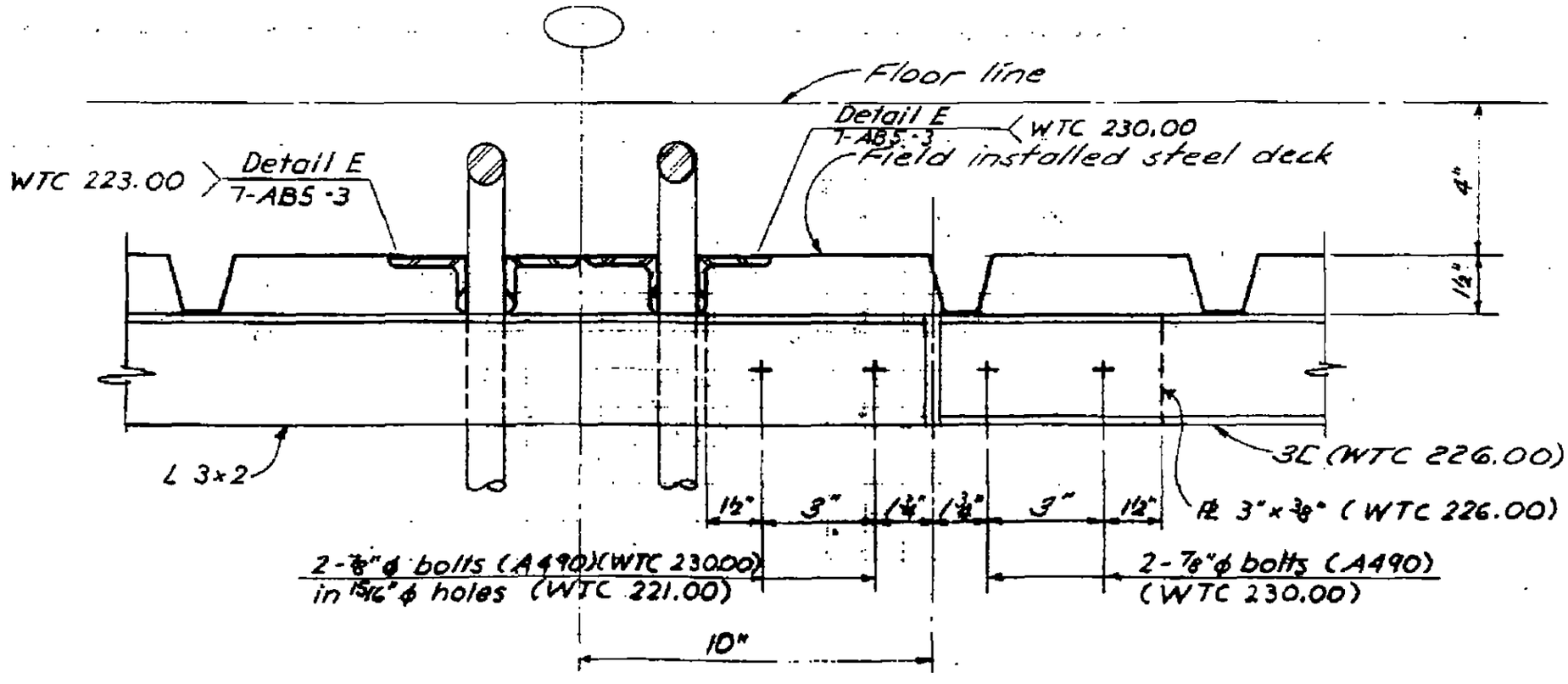

Detail E 24

LICENSED PROFESSIONAL ENGINEER
LESLIE E. ROBERTSON
No. 34360
UNIVERSITY OF THE STATE OF NEW YORK

7-A84-15

SKILLING - HELLE - CHRISTIANSEN - ROBERTSON Structural & Civil Engineers

PROJECT THE WORLD TRADE CENTER | TITLE FLOOR PANEL - DETAIL E 26 & E 26 B | DATE 10-27-67

REVISIONS

8-1-68
10-4-68

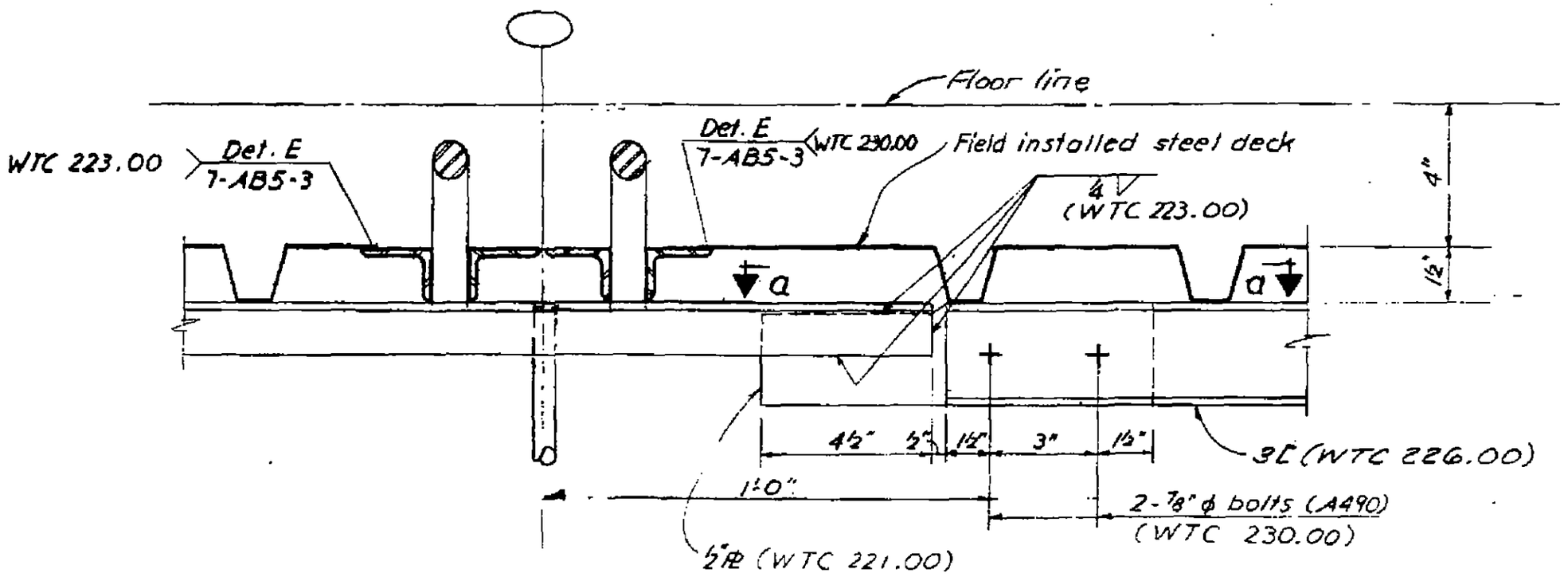

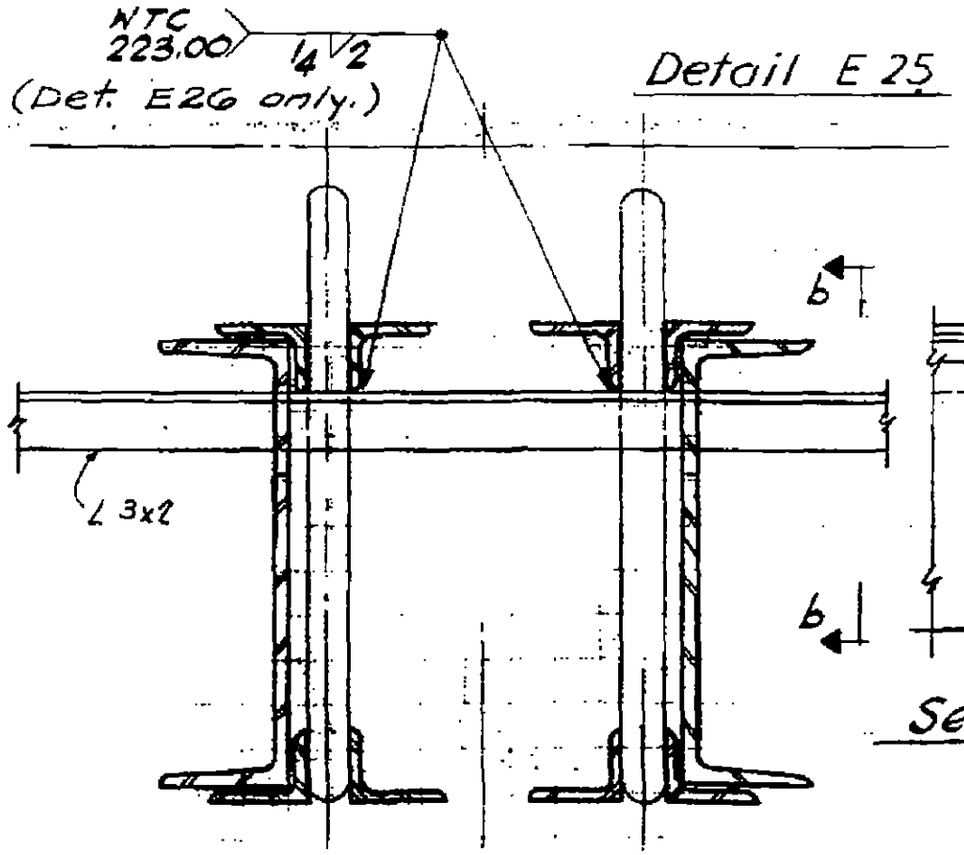

Detail E 25

Detail E26 & E26B

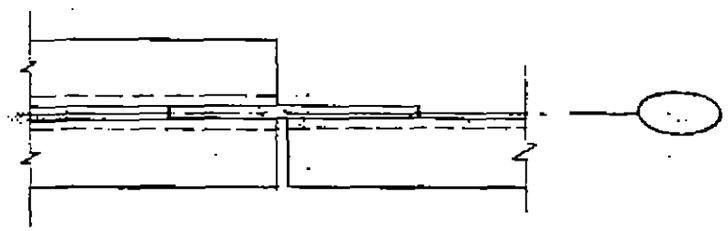

Section a-a

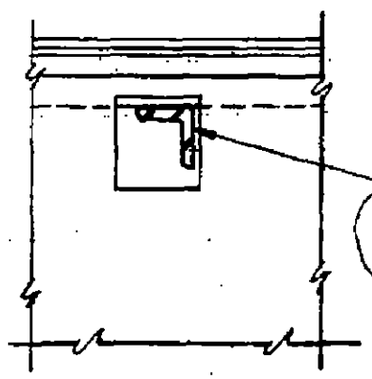

Section b-b

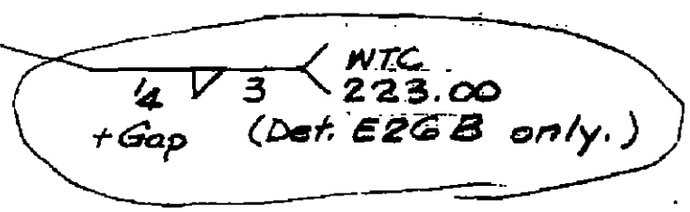

LICENSED PROFESSIONAL ENGINEER
LESLIE E. ROBERTSON
No. 34360
UNIVERSITY OF THE STATE OF NEW YORK

7-AB4-15

SKILLING, HELLE, CHRISTIANSEN, ROBERTSON — Structural & Civil Engineers

PROJECT: THE WORLD TRADE CENTER | TITLE: FLOOR PANEL - DETAIL E26A & E26C | DATE: 8-1-68

REVISIONS

10-4-68

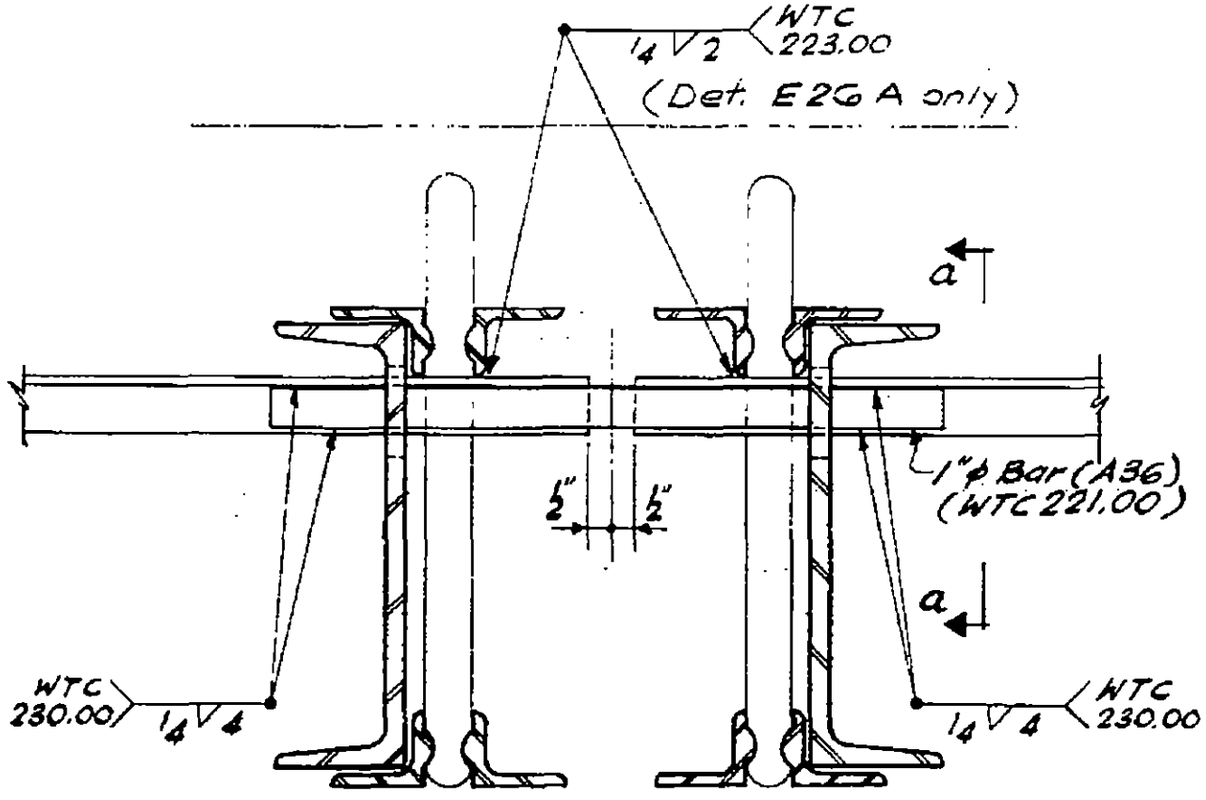

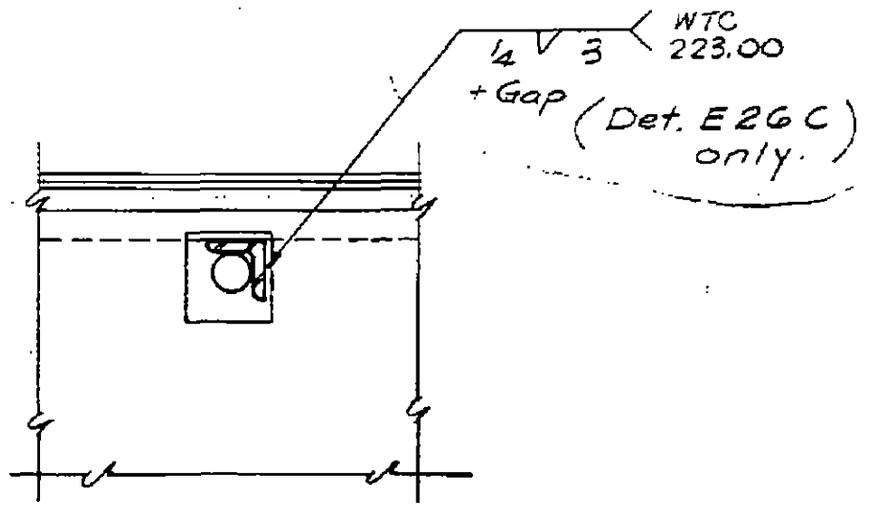

Section a-a

LICENSED PROFESSIONAL ENGINEER — LESLIE E. ROBERTSON — No. 34[illegible] — UNIVERSITY OF [illegible] STATE

DESIGNED

DRAWN

REVIEWED

7-AB4-15.2

SKILLING - HELLE - CHRISTIANSEN - ROBERTSON Structural & Civil Engineers

PROJECT THE WORLD TRADE CENTER | TITLE FLOOR PANEL - DETAIL E27, E27A | DATE 10-20-67

REVISIONS

1-3-68
5-6-68
7-22-68

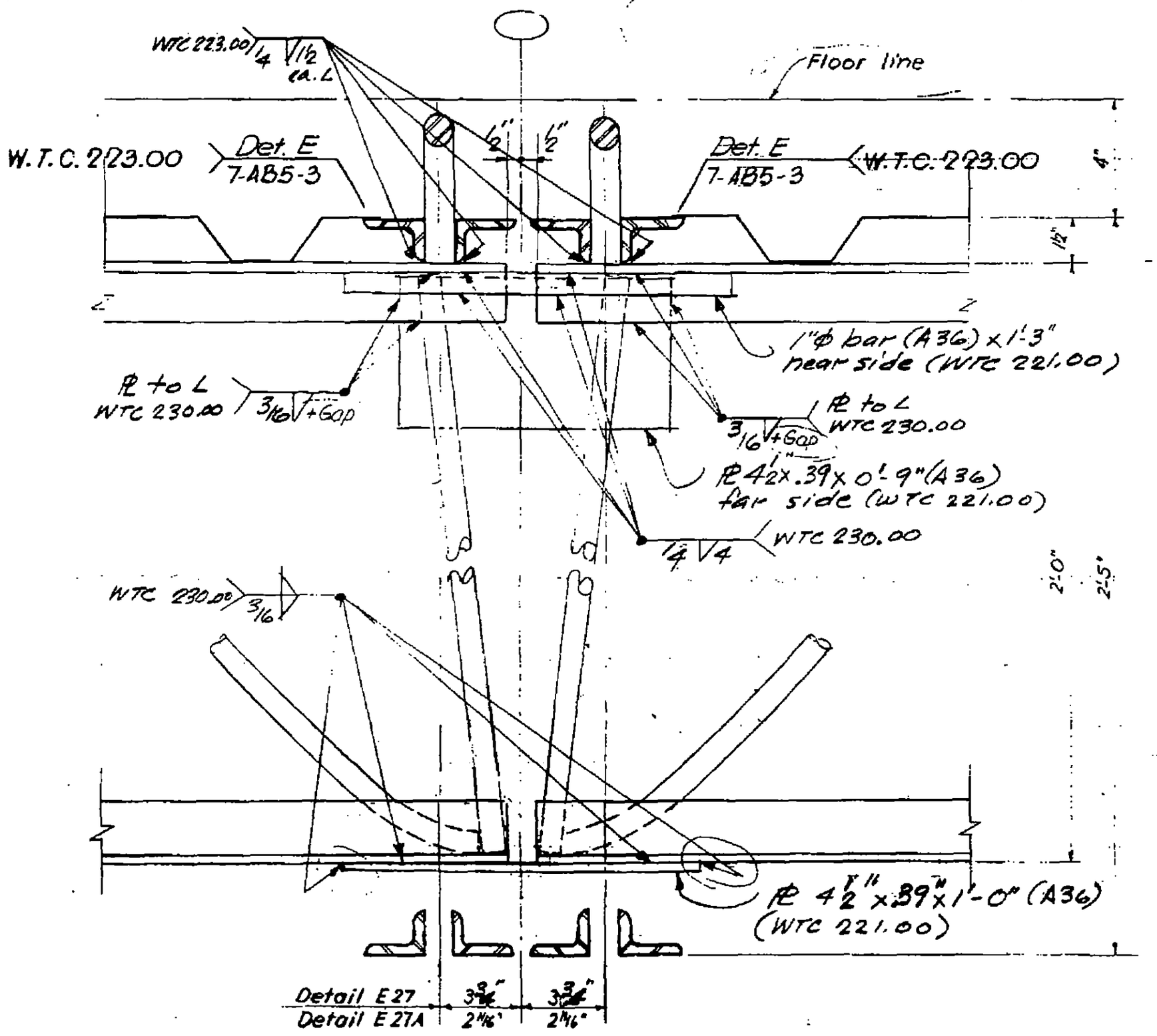

LICENSED PROFESSIONAL ENGINEER LESLIE E. ROBERTS No. 34... UNIVERSITY OF ...

67

7-AB4-16

SKILLING - HELLE - CHRISTIANSEN - ROBERTSON Structural & Civil Engineers

PROJECT THE WORLD TRADE CENTER | TITLE FLOOR PANEL DETAIL E-20 | DATE 1-5-68

REVISIONS

8-1-68
8-15-68
10-4-68

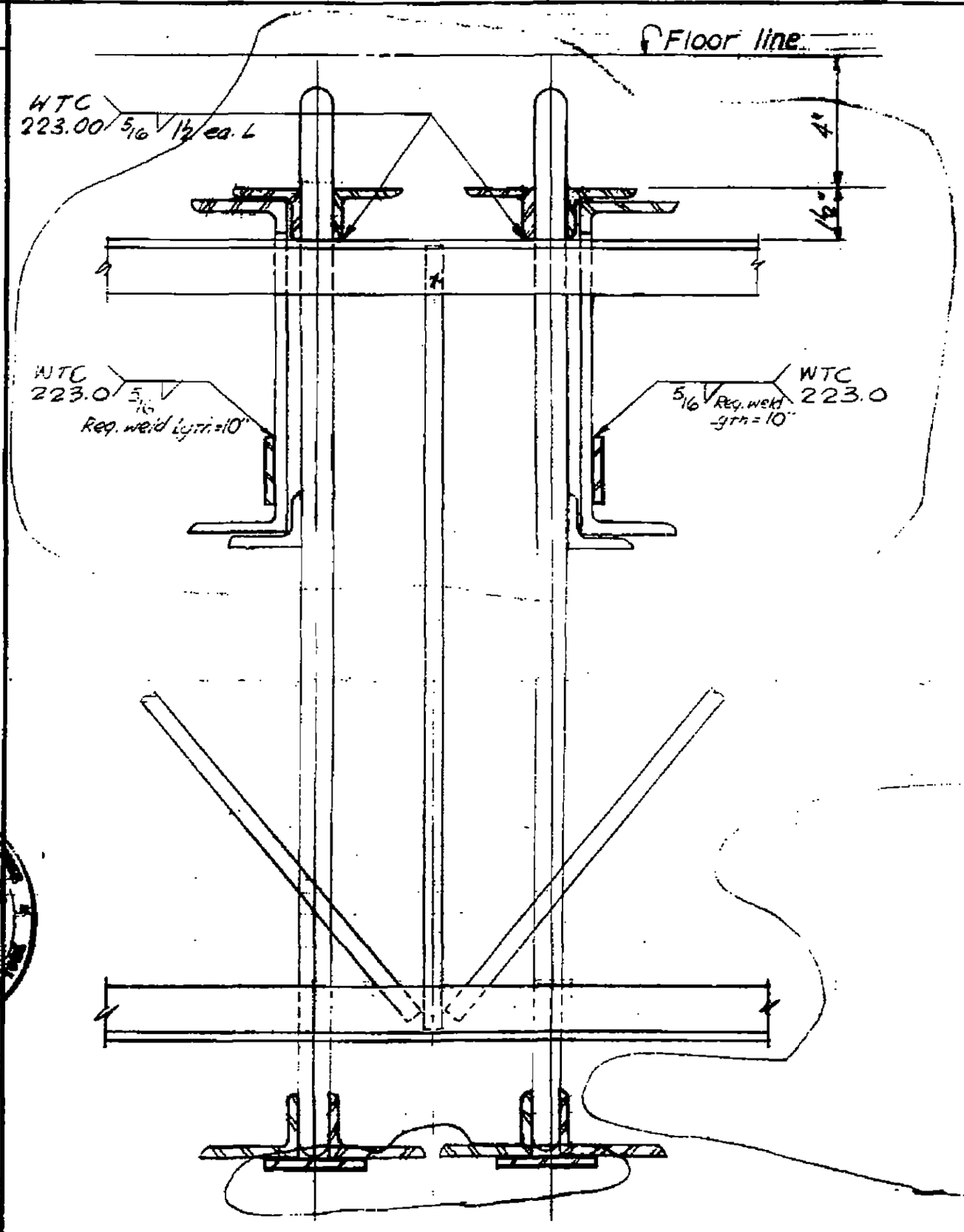

No. 3490

Z-486-17

SKILLING, HELLE, CHRISTIANSEN, ROBERTSON — Structural & Civil Engineers

PROJECT THE WORLD TRADE CENTER | TITLE FLOOR PANEL - DETAIL E 28 A | DATE 8-1-68

REVISIONS

- 15-68
- 10-4-68

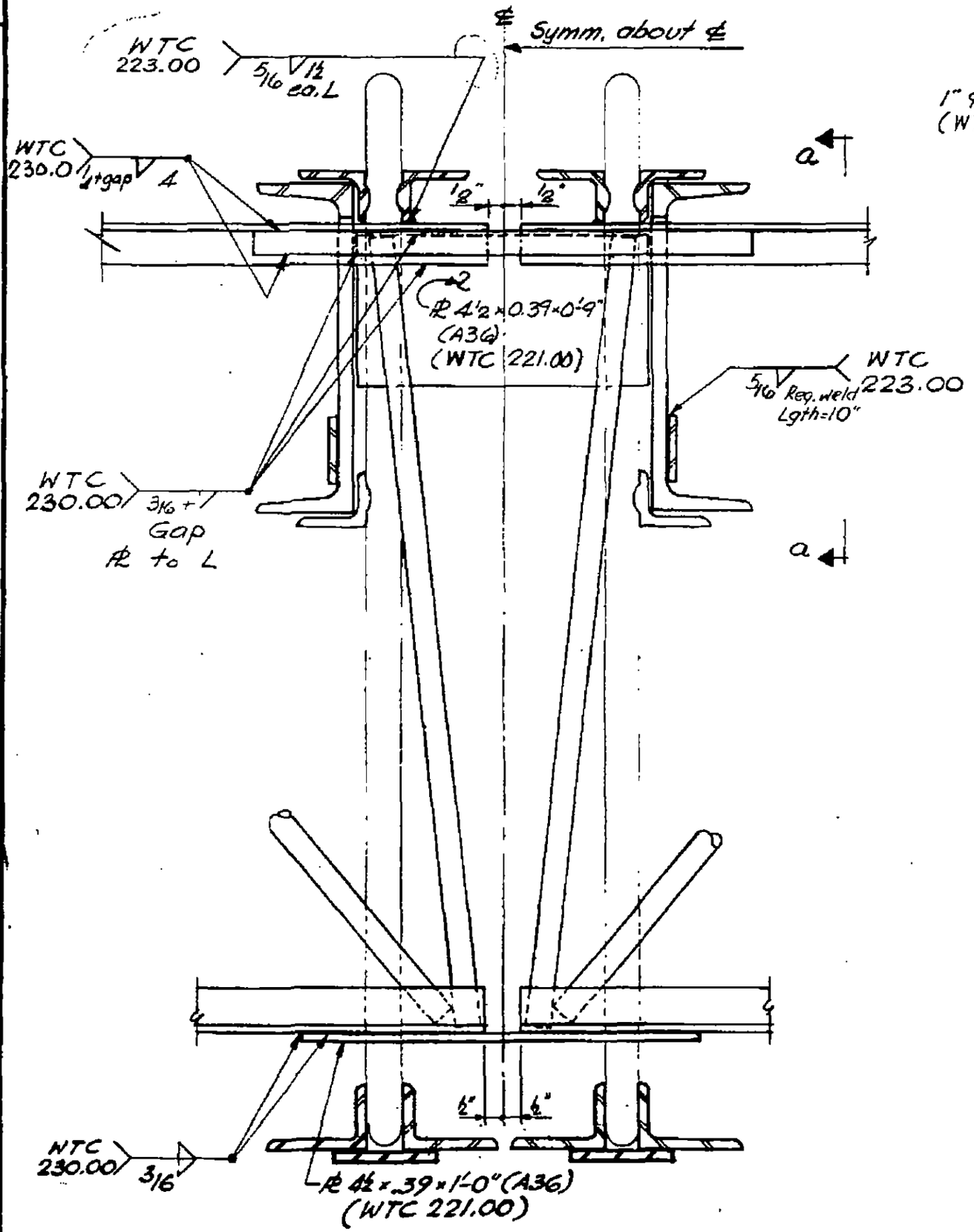

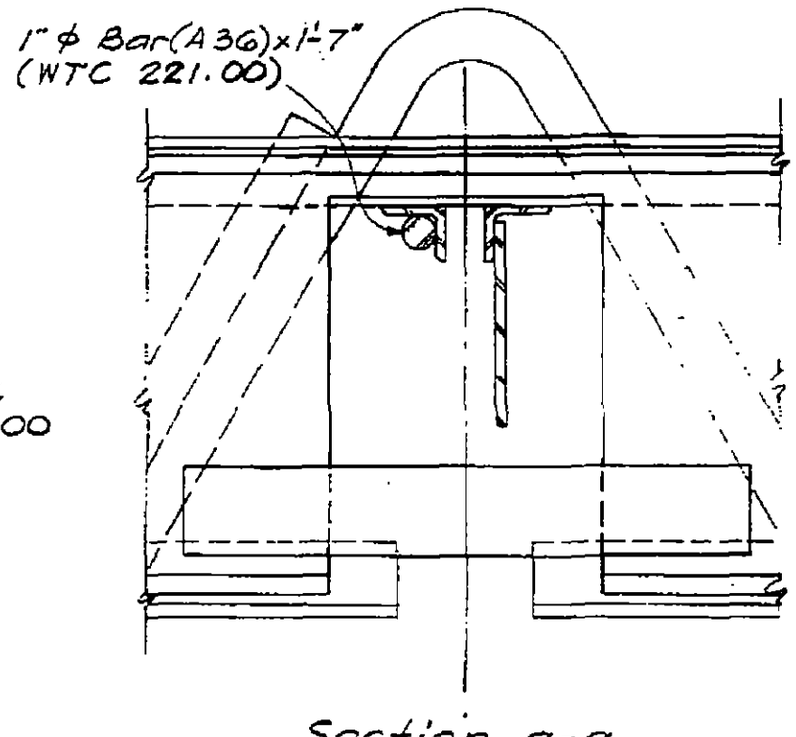

Section a-a

DESIGNED

DRAWN

REVIEWED

7-AB4-17.1

SKILLING, HELLE, CHRISTIANSEN, ROBERTSON — Structural & Civil Engineers

PROJECT: THE WORLD TRADE CENTER | TITLE: FLOOR PANEL - DETAIL E28, E28A, E28B, E28D | DATE: 8-1-68

REVISIONS

- 15-68
10-4-68
12-20-68

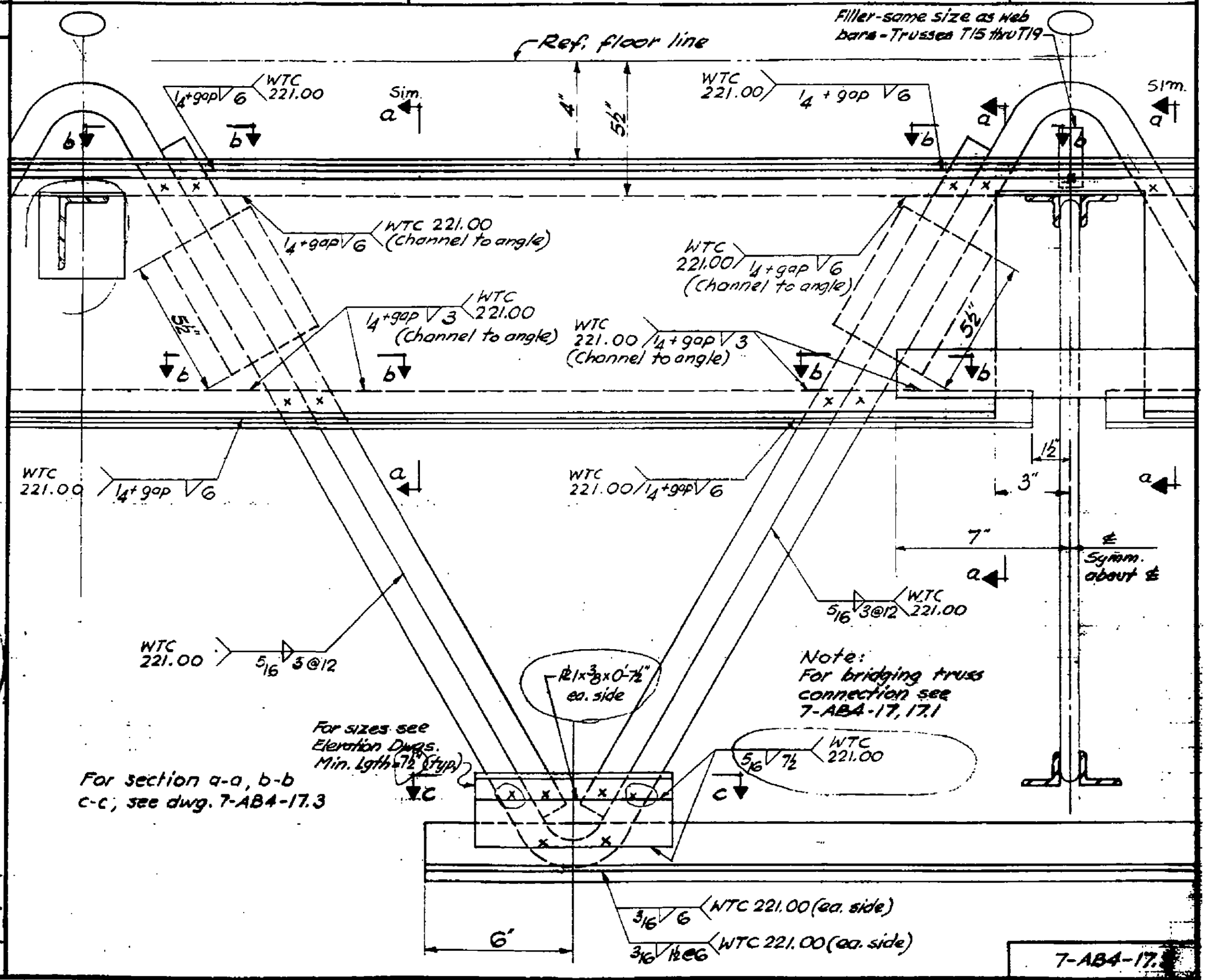

DESIGNED

DRAWN

REVIEWED

7-AB4-17.3

SKILLING, HELLE, CHRISTIANSEN, ROBERTSON — Structural & Civil Engineers

PROJECT: THE WORLD TRADE CENTER | TITLE: FLOOR PANEL - DETAIL E28, E28A, E28B, E28C, E28D | DATE: 8-1-68

REVISIONS

( ). 15 · 68
10-4-68
7-28-70

Note A: Add arc welding as reqd. to develop full strength of web bars.

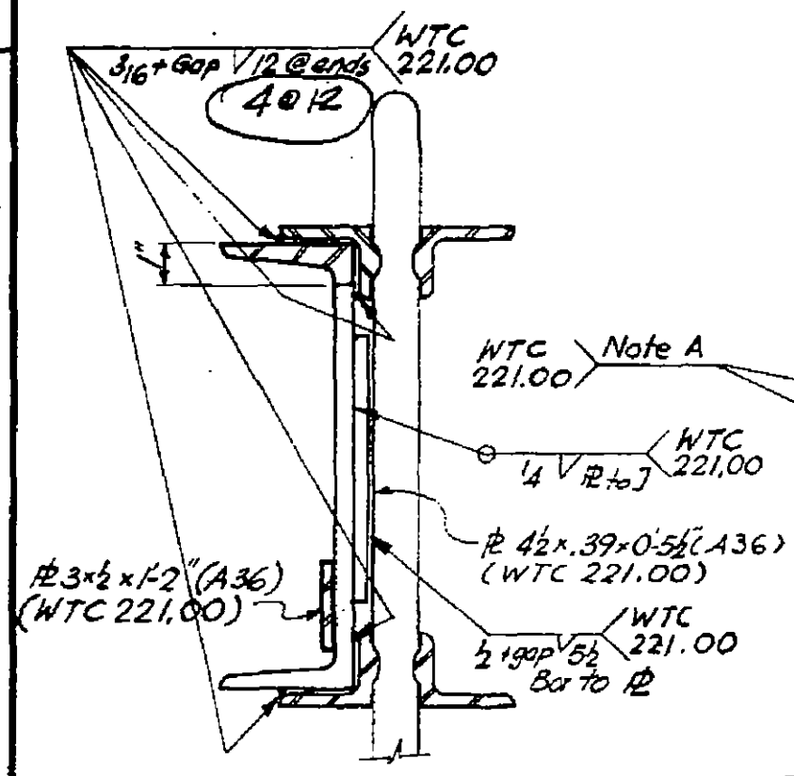

Section a-a

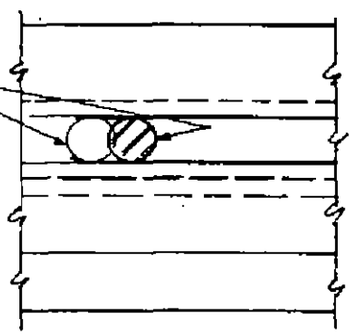

Section b-b

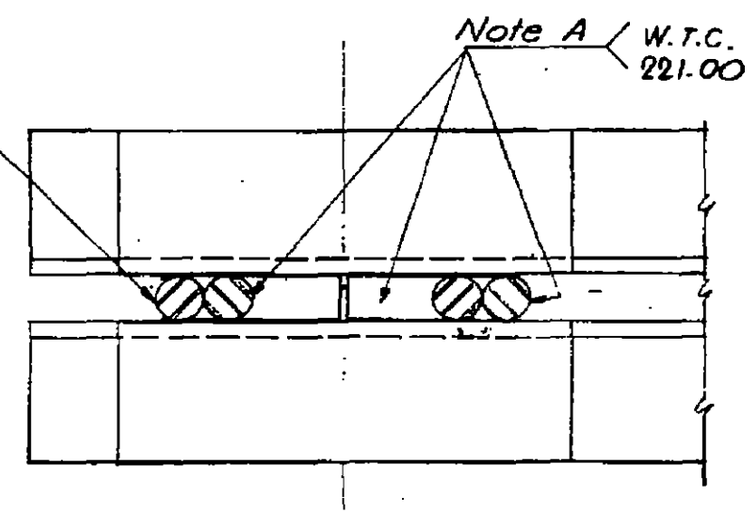

Section c-c

Note: For additional J to 7 welding see detail E28, E28A, E28B, E28D, 7-AB4-17

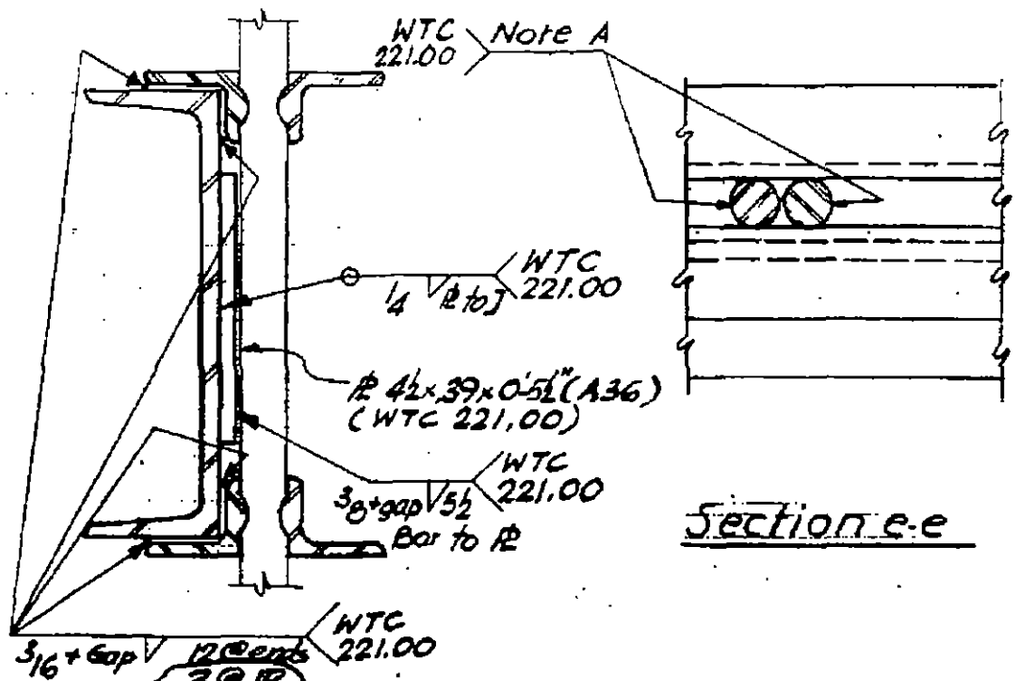

Section e-e

Section d-d

Note: For additional J to 7 welding see detail E28C 7-AB4-17.5

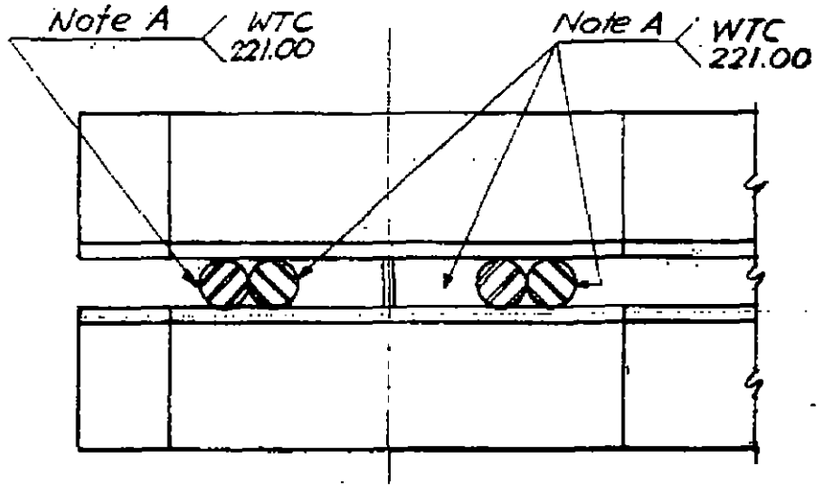

Section f-f

UNIVERSITY OF THE STATE OF NEW YORK
No. 34360

DESIGNED
DRAWN
REVIEWED

7-AB4-

SKILLING, HELLE, CHRISTIANSEN, ROBERTSON — Structural & Civil Engineers

PROJECT THE WORLD TRADE CENTER | TITLE FLOOR PANEL DETAIL E 28 B | DATE 8-1-68

REVISIONS

( )- 15-68
10-4-68

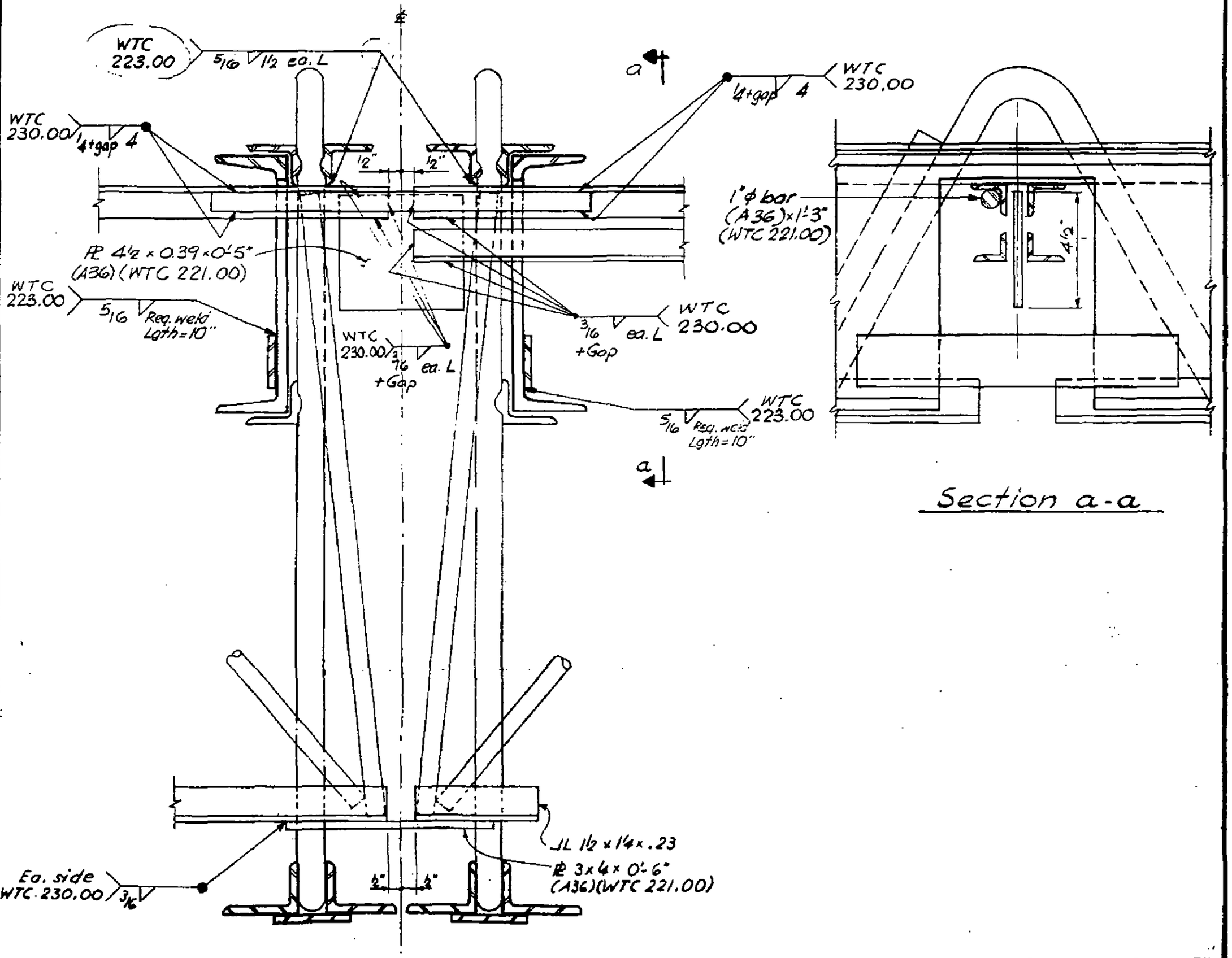

Section a-a

DESIGNED

DRAWN

REVIEWED

7-AB4-17.4

SKILLING, HELLE, CHRISTIANSEN, ROBERTSON — Structural & Civil Engineers

PROJECT: THE WORLD TRADE CENTER | TITLE: FLOOR PANEL - DETAIL E2BC | DATE: 8-1-68

REVISIONS
- 15 - 68
10-4-68

Ref. floor line

4'

5½'

WTC 221.00 ¼+gap ▽6

WTC 221.00 ¼ + gap ▽6

Sim.

WTC 221.00 ¼+gap ▽6 (Channel to angle)

WTC 221.00 ¼+gap ▽2½ (Channel to angle)

WTC 221.00 ¼+gap ▽2½ (Channel to angle)

WTC 221.00 ¼+gap ▽6 (Channel to angle)

5½"

5½"

Filler-same size as web bars-Trusses T20, T21

WTC 221.00 ¼+gap ▽5

WTC 221.00 ¼+gap ▽5

WTC 221.00 ⅛ 3@6

⅛ 3@6 WTC 221.00

For section d-d, e-e, f-f see dwg. 7-AB4-17.3

For sizes see Elevation Dwgs Min. Lgth = 6" (Typ.)

⌀18 C.P. (NTC 221.00)

3/16 ▽6 WTC 221.00 (ea. side)

3/16 ▽12@6 WTC 221.00 (ea. side)

6"

LICENSED PROFESSIONAL ENGINEER — LESLIE E. ROBERTSON — No. 34360 — UNIVERSITY OF NEW YORK

DESIGNED

DRAWN

REVIEWED

7-AB4-17.2

SKILLING, HELLE, CHRISTIANSEN, ROBERTSON — Structural & Civil Engineers

PROJECT THE WORLD TRADE CENTER | TITLE FLOOR PANEL DETAIL E28 D | DATE 8-1-68

REVISIONS

10-4-68

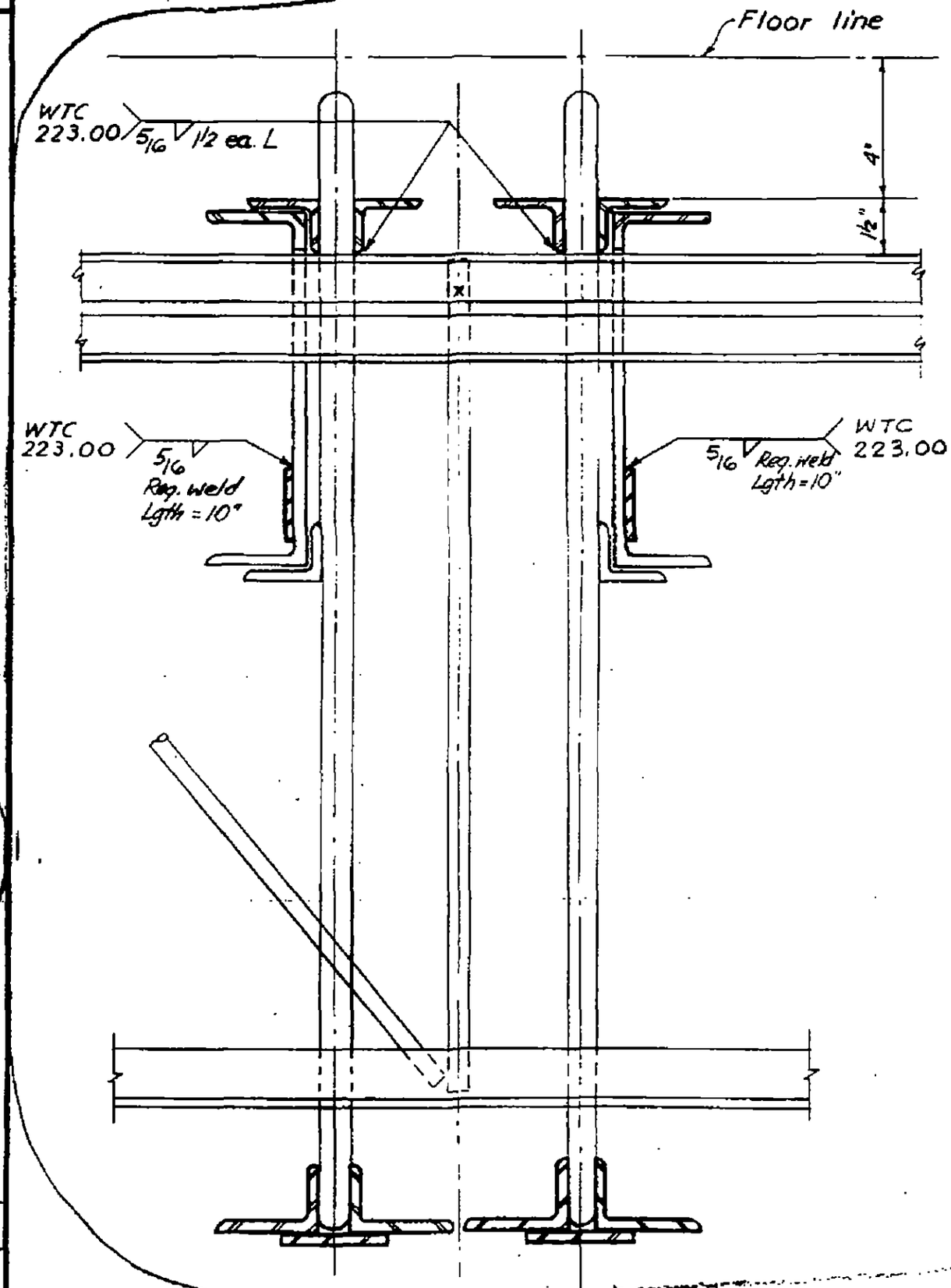

LICENSED ... LESLIE E. ... No. 34350 ... UNIVERSITY OF ... NEW YORK

DESIGNED

DRAWN

REVIEWED

Z-AB4-17.6

SKILLING, HELLE, CHRISTIANSEN, ROBERTSON — Structural & Civil Engineers

PROJECT: THE WORLD TRADE CENTER | TITLE: FLOOR PANEL DETAIL E 28 E | DATE: 8-15-68

REVISIONS

10-4-68

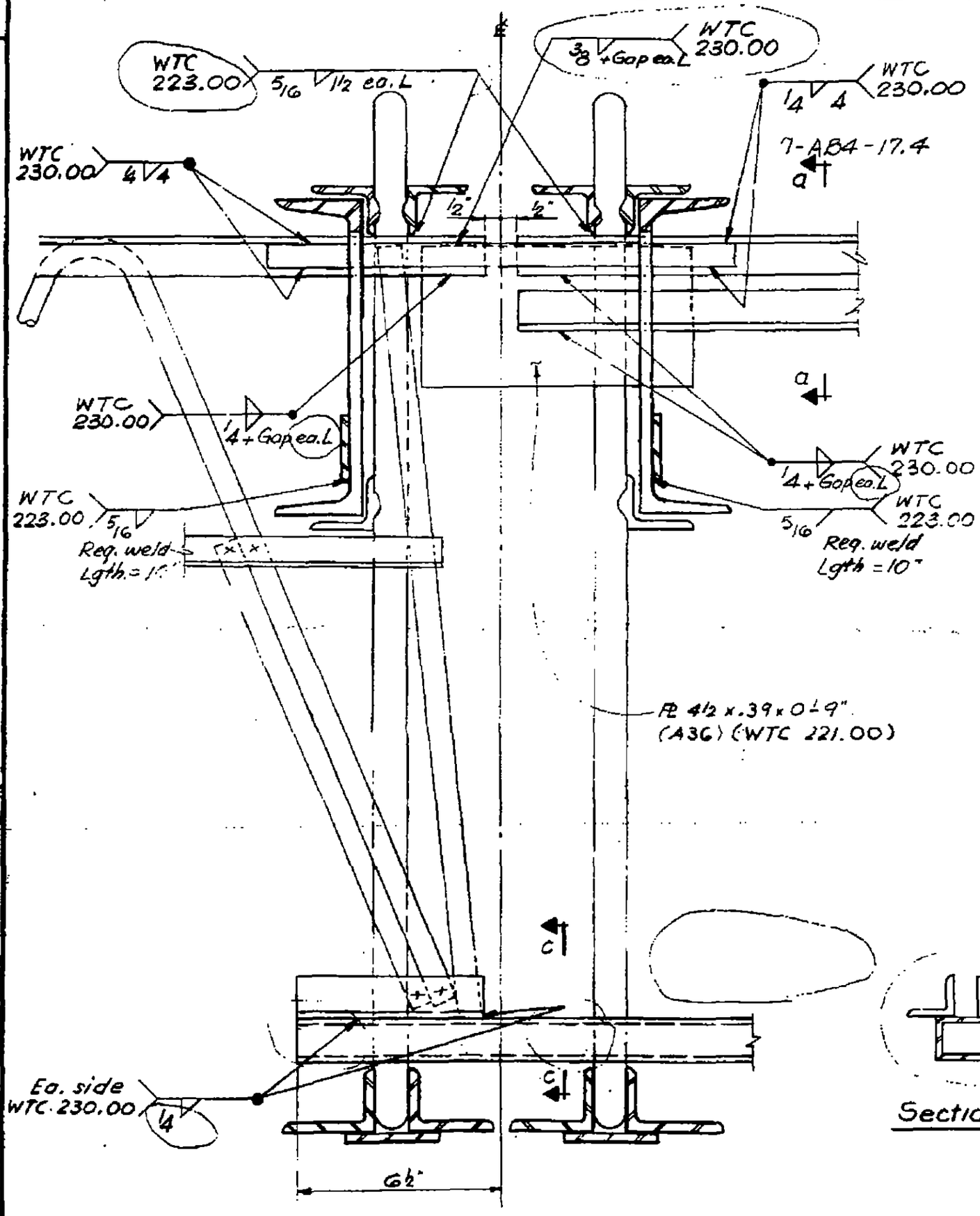

DESIGNED

DRAWN

REVIEWED

7-AB4-17.7

SKILLING - HELLE - CHRISTIANSEN - ROBERTSON Structural & Civil Engineers

PROJECT THE WORLD TRADE CENTER | TITLE FLOOR PANEL DETAIL E28F | DATE 8-15-68

REVISIONS

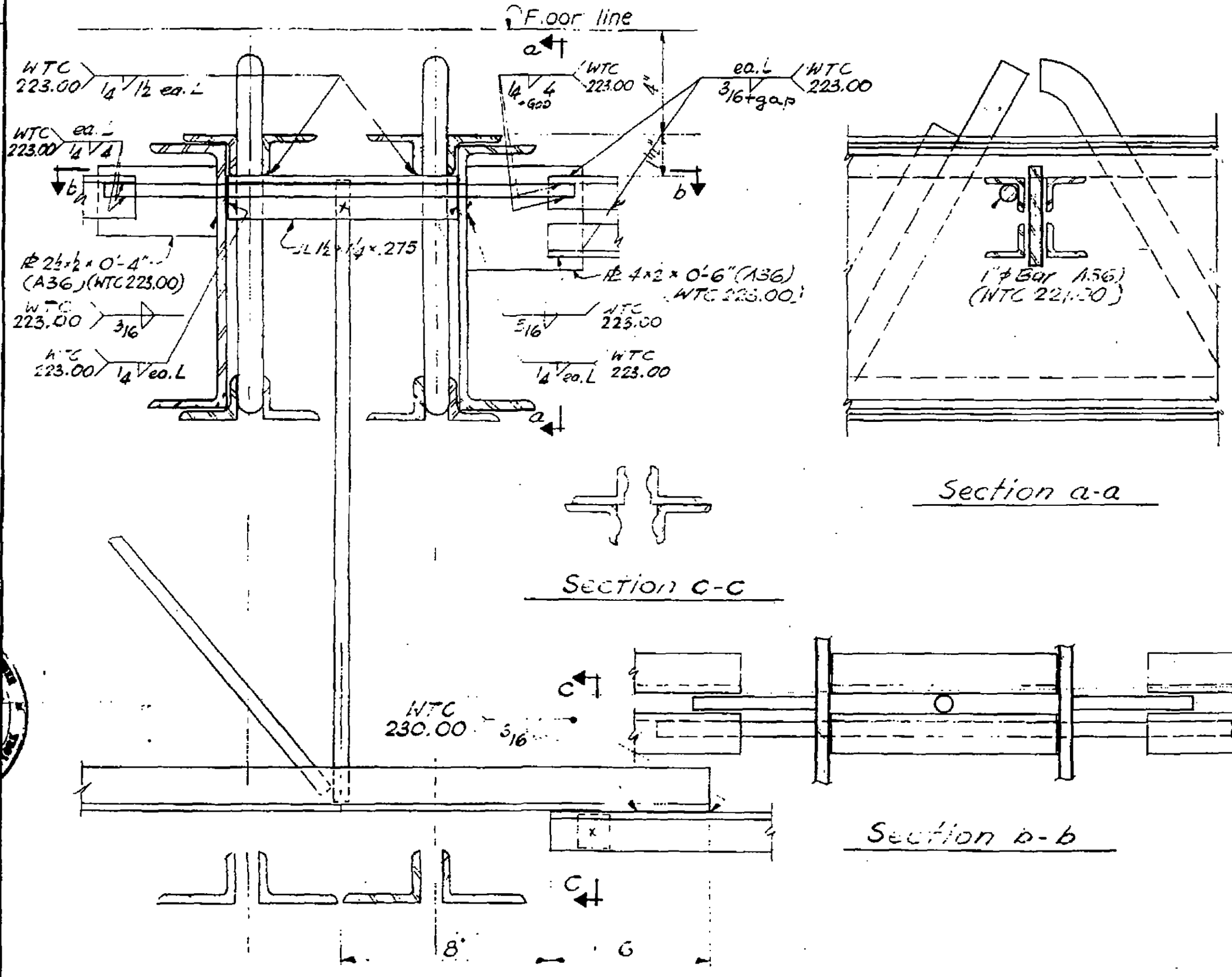

LICENSED PROFESSIONAL ENGINEER
LESLIE E. ROBERTSON
No. 34360
UNIVERSITY OF THE STATE OF NEW YORK

7-AB4-17.8

SKILLING - HELLE - CHRISTIANSEN - ROBERTSON Structural & Civil Engineers

PROJECT THE WORLD TRADE CENTER | TITLE FLOOR PANEL - DETAILS E34, E35, E35A | DATE 1-3-68

REVISIONS

4-1-68
5-6-68
7-22-68
1-6-69

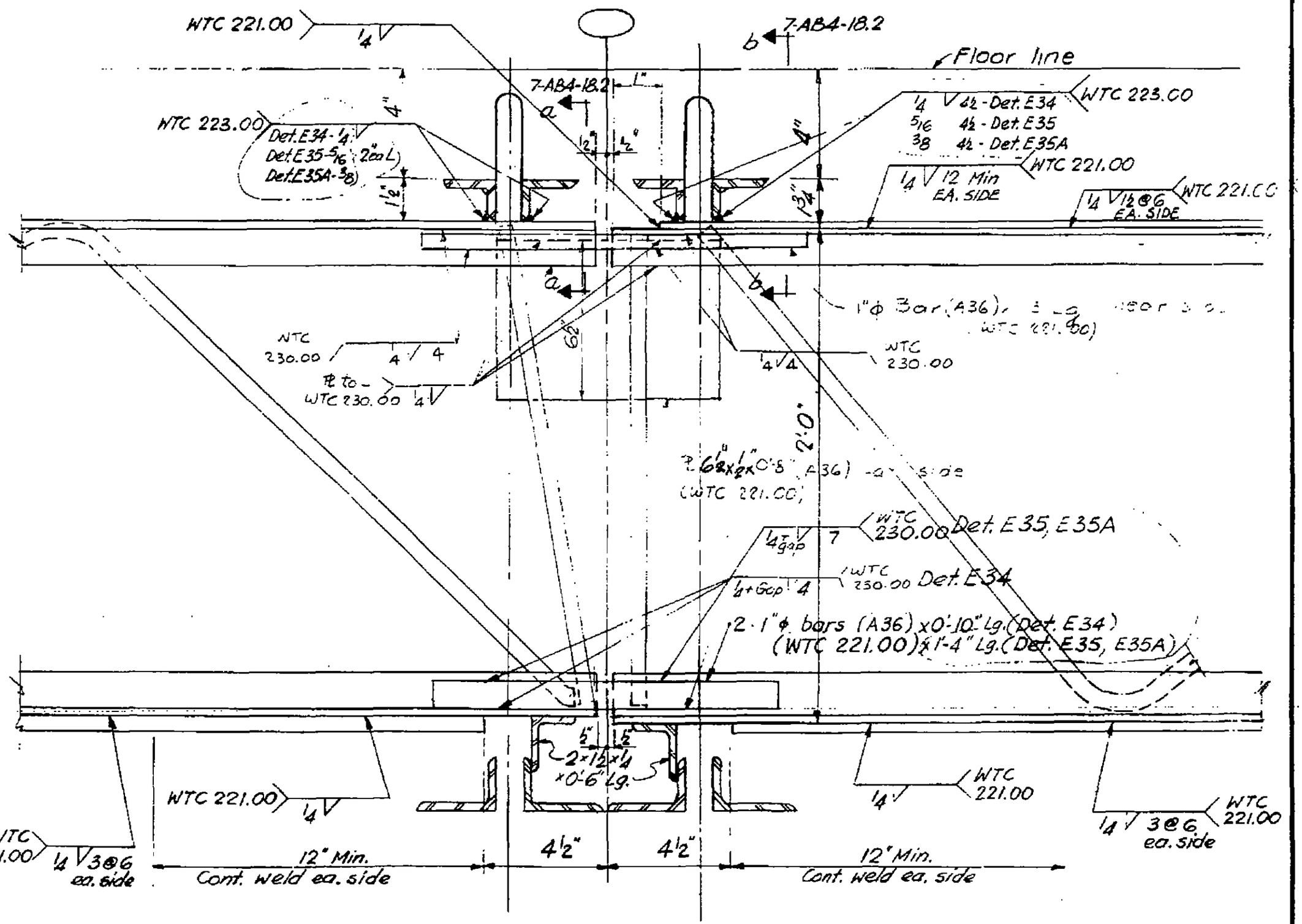

LICENSED PROFESSIONAL ENGINEER LESLIE E. ROBE... UNIVERSITY OF THE ...

7-AB4-18

54

SKILLING - HELLE - CHRISTIANSEN - ROBERTSON Structural & Civil Engineers

PROJECT THE WORLD TRADE CENTER | TITLE FLOOR PANEL - DETAIL E30 | DATE 5-6-68

REVISIONS

7-22-68

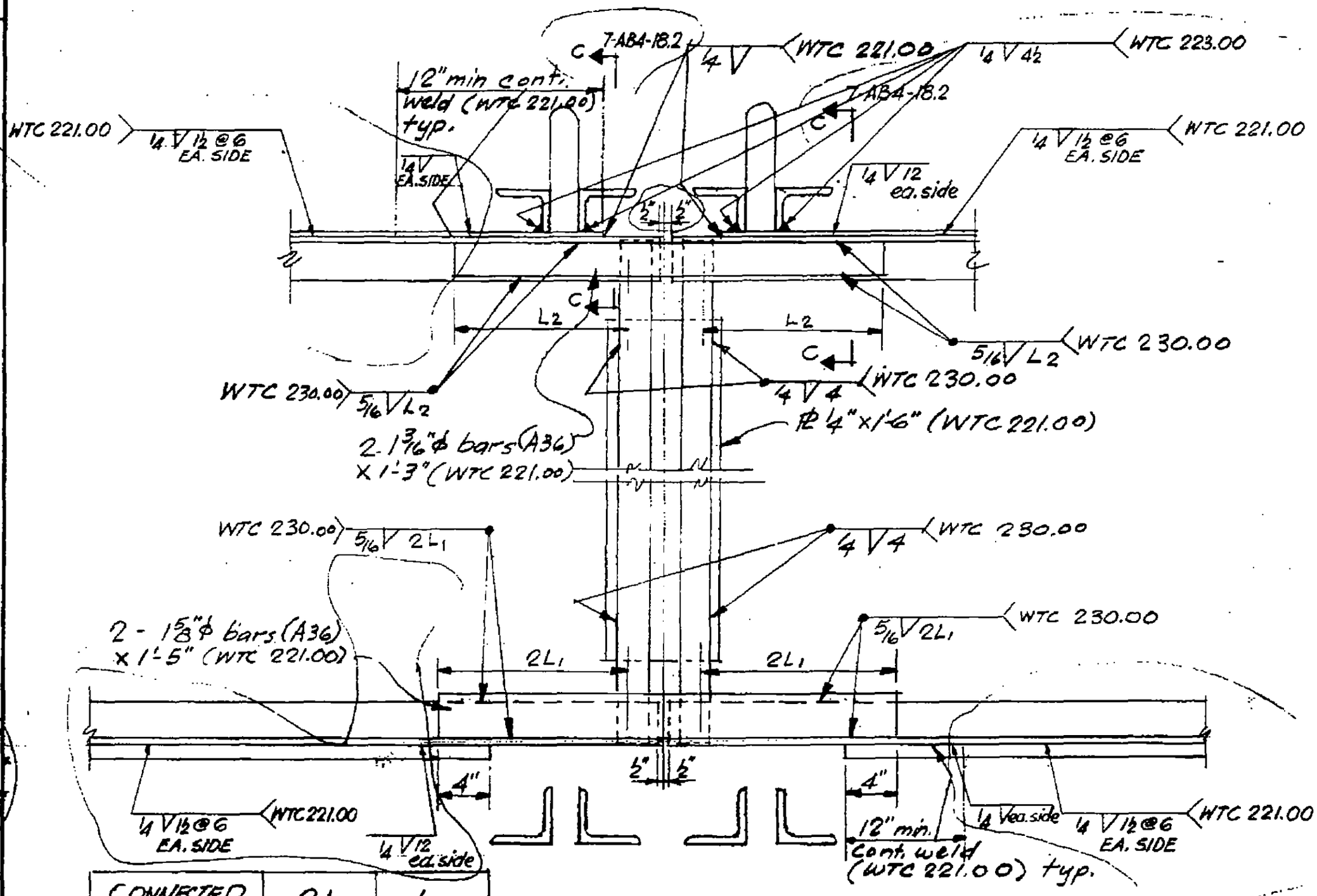

CONNECTED TRUSSES	2L1	L2
24T7A - T&A	7½"	4"
24T7 - T8	7"	3¾"
24T7B - 8B	6½"	3½"

LICENSED PROFESSIONAL ENGINEER LESLIE E. ROBERTSON No. 34360 UNIVERSITY OF THE STATE OF NEW YORK

7-AB4-18.1

SKILLING, HELLE, CHRISTIANSEN, ROBERTSON — Structural & Civil Engineers

PROJECT: THE WORLD TRADE CENTER | TITLE: FLOOR PANEL - DETAIL E30, E34 & E34A | DATE: 7-22-68

REVISIONS

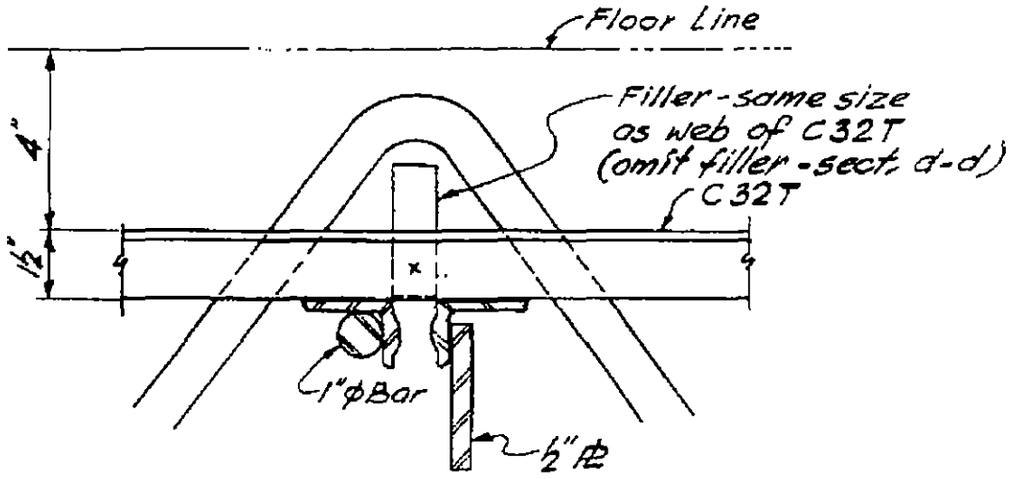

Section a-a

Section d-d - similar except as noted

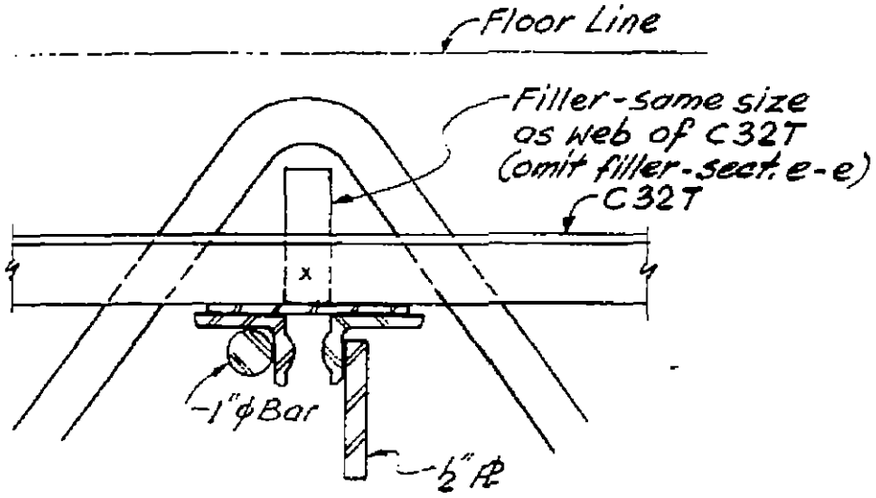

Section b-b

Section e-e - similar except as noted

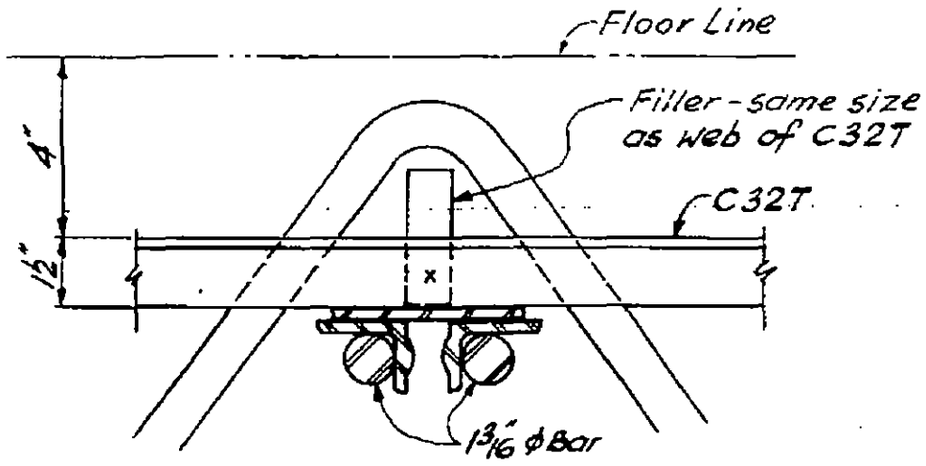

Section c-c

LICENSED PROFESSIONAL ENGINEER
LESLIE E. ROBERTSON
No. 34300
UNIVERSITY OF THE STATE OF NEW YORK

DESIGNED

DRAWN

REVIEWED

70

7-AB4-18.2

SKILLING, HELLE, CHRISTIANSEN, ROBERTSON — Structural & Civil Engineers

PROJECT: THE WORLD TRADE CENTER | TITLE: FLOOR PANEL - DETAIL E34A | DATE: 7-22-68

REVISIONS

10-15-68

12-20-68

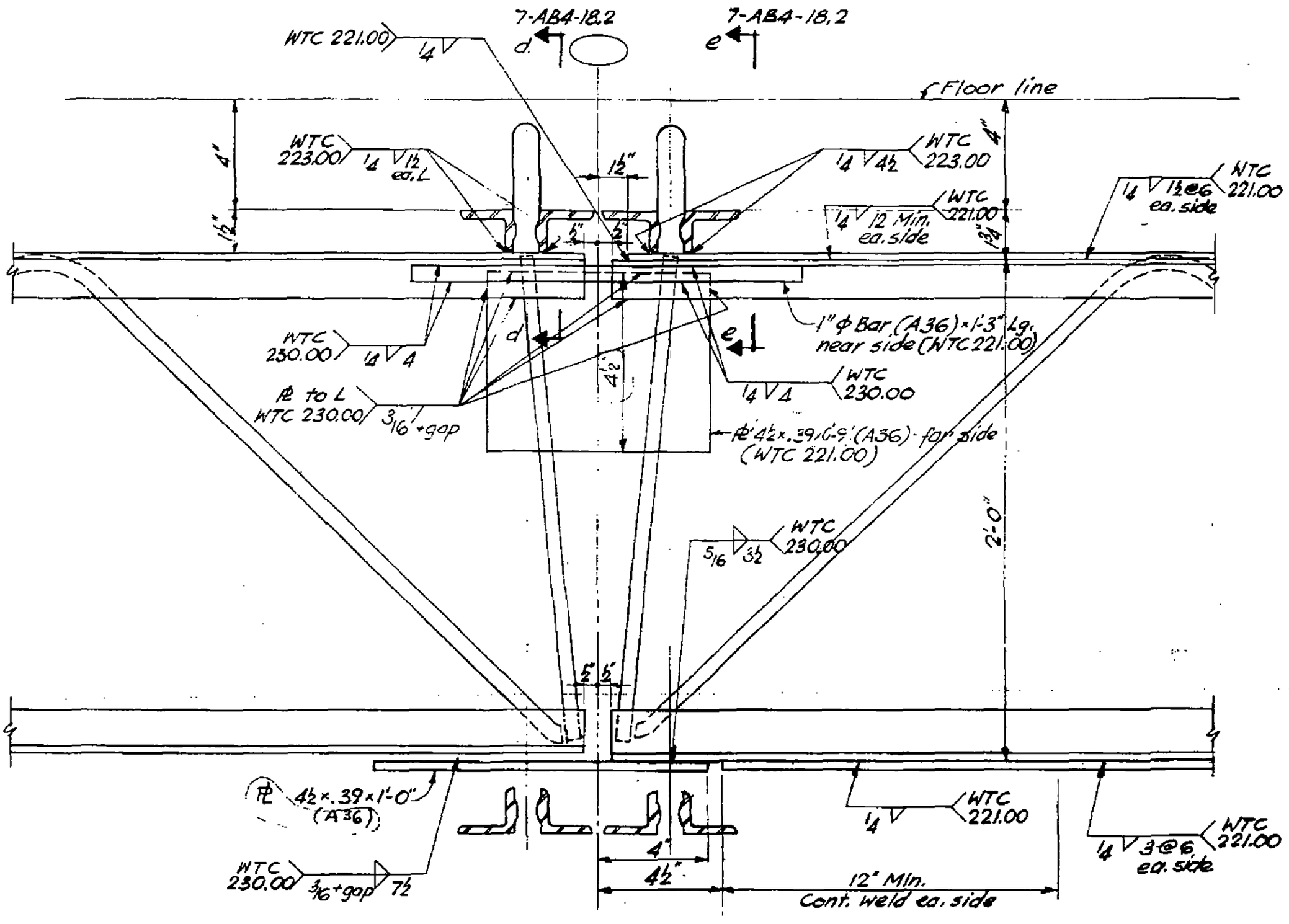

LICENSED PROFESSIONAL ENGINEER — LESLIE E. ROBERTSON — No. 34310 — UNIVERSITY OF THE STATE OF NEW YORK

DESIGNED

DRAWN.

REVIEWED

21

7-AB4-18.3

SKILLING, HELLE, CHRISTIANSEN, ROBERTSON — Structural & Civil Engineers

PROJECT THE WORLD TRADE CENTER | TITLE FLOOR PANEL - DETAIL E 34 B | DATE 8-15-68

REVISIONS

1 10-4-68

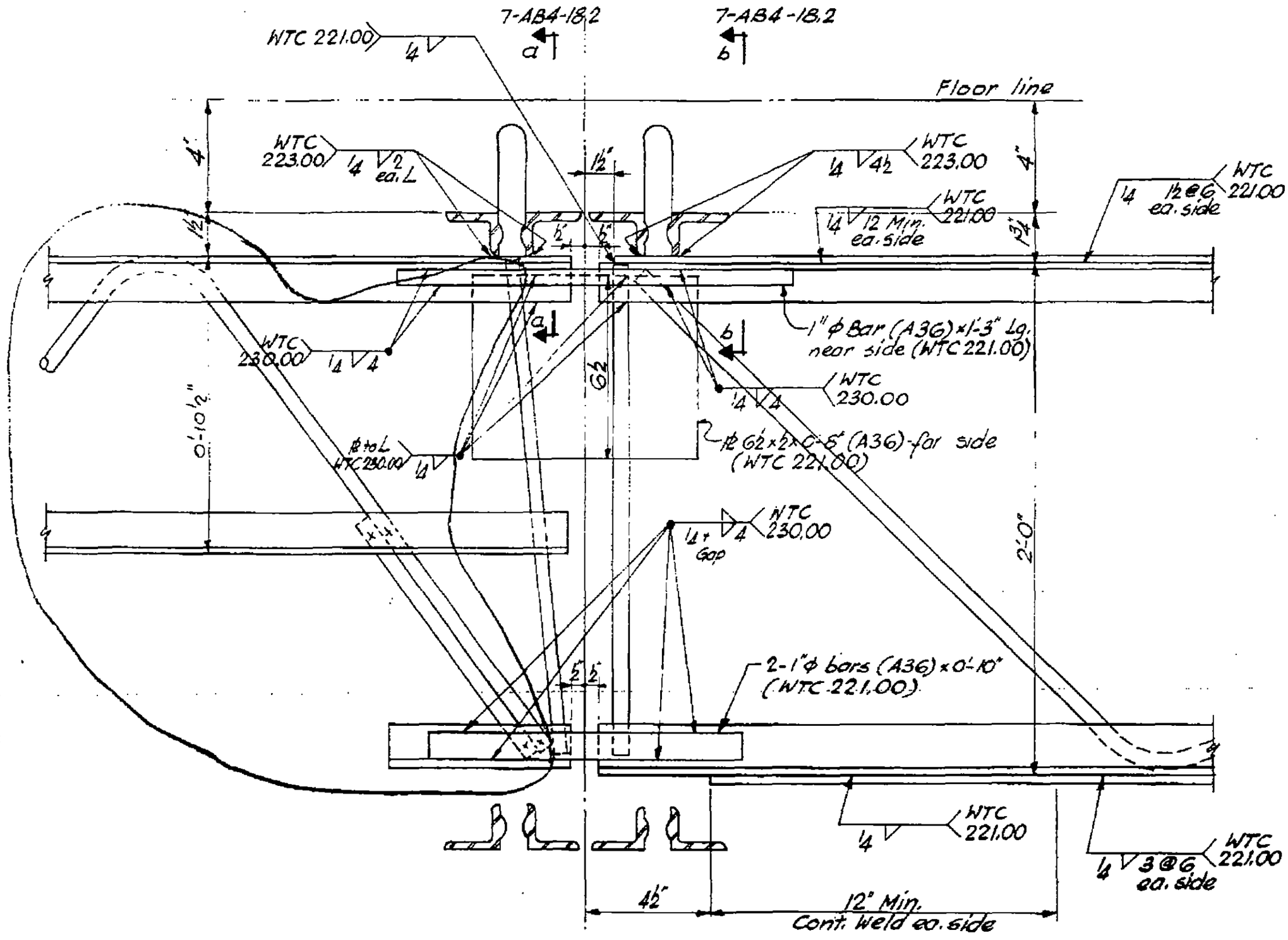

LICENSED PROFESSIONAL ENGINEER — LESLIE E. ROBERTSON — No. 34960 — UNIVERSITY OF THE STATE OF NEW YORK

DESIGNED

DRAWN

REVIEWED

7-AB4-18.4

SKILLING, HELLE, CHRISTIANSEN, ROBERTSON — Structural & Civil Engineers

PROJECT: THE WORLD TRADE CENTER

TITLE: FLOOR PANEL - DETAIL E 31

DATE: 1-6-69

REVISIONS

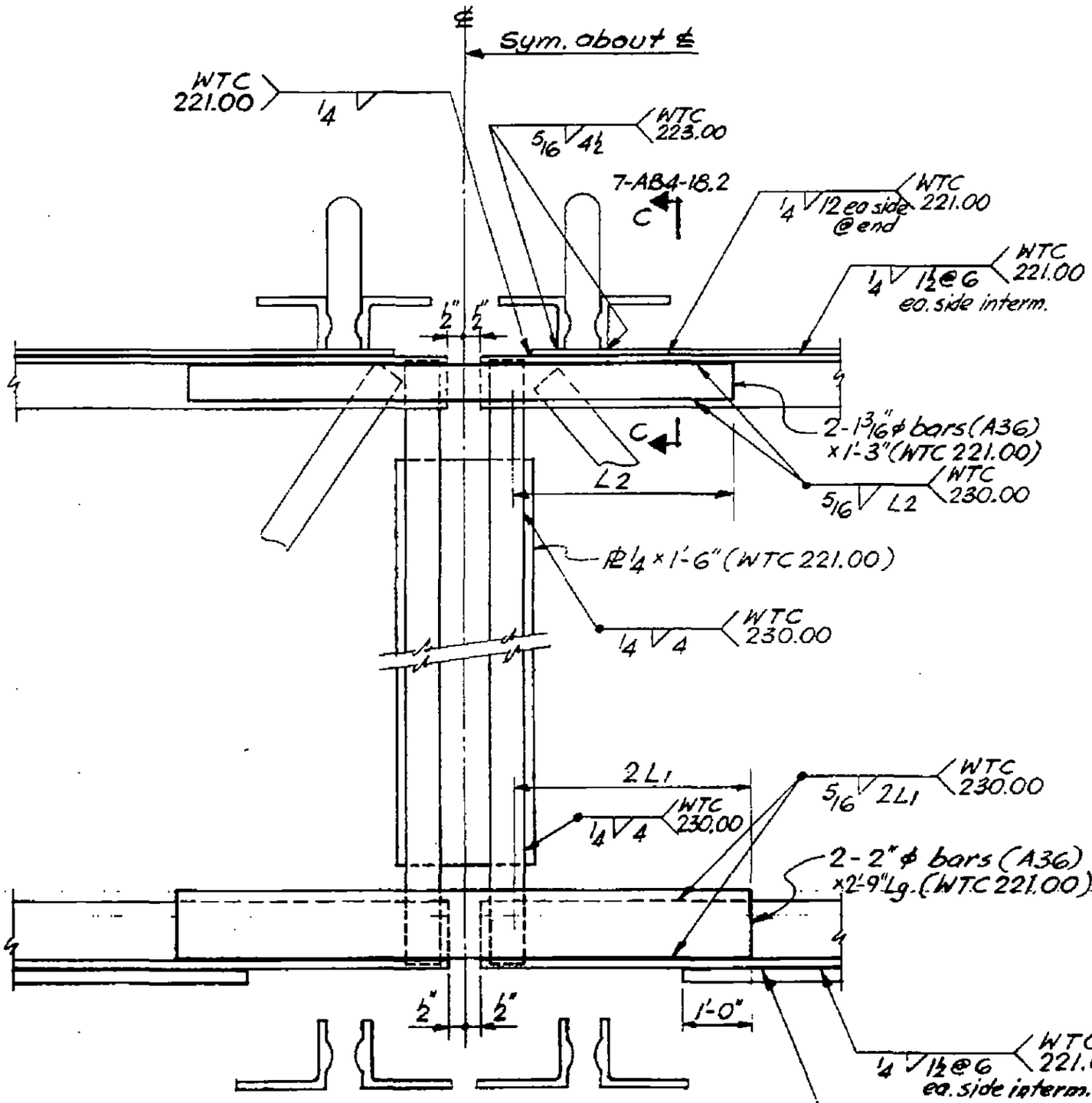

Connected Trusses	2L1	L2
24T7F-T8C	8"	4"
24T7G-T8D	10"	4"
24T7H-T8E	9"	4"

LICENSED PROFESSIONAL ENGINEER — LESLIE E. ROBERTSON — No. 34360 — UNIVERSITY OF THE STATE OF NEW YORK

DESIGNED

DRAWN

REVIEWED

55

7-AB4-18.5

SKILLING - HELLE - CHRISTIANSEN - ROBERTSON Structural & Civil Engineers

PROJECT THE WORLD TRADE CENTER | TITLE FLOOR PANEL DETAIL E38 & E39 | DATE 1-3-68

REVISIONS

7-22-68
10-15-68
12-20-68

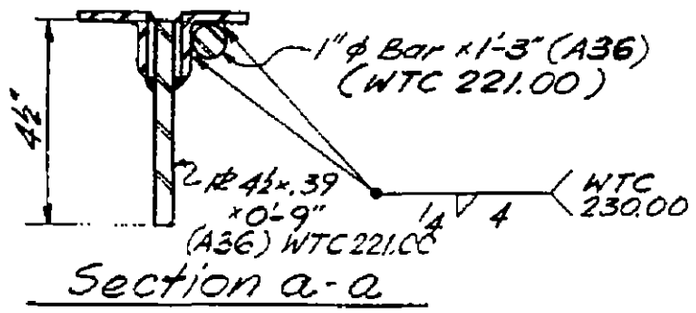

Section a-a

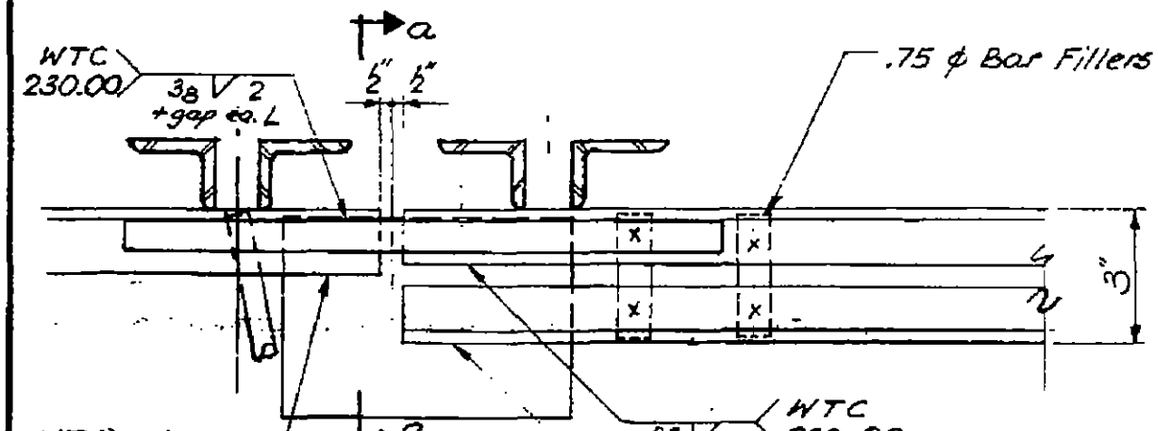

Top Chord

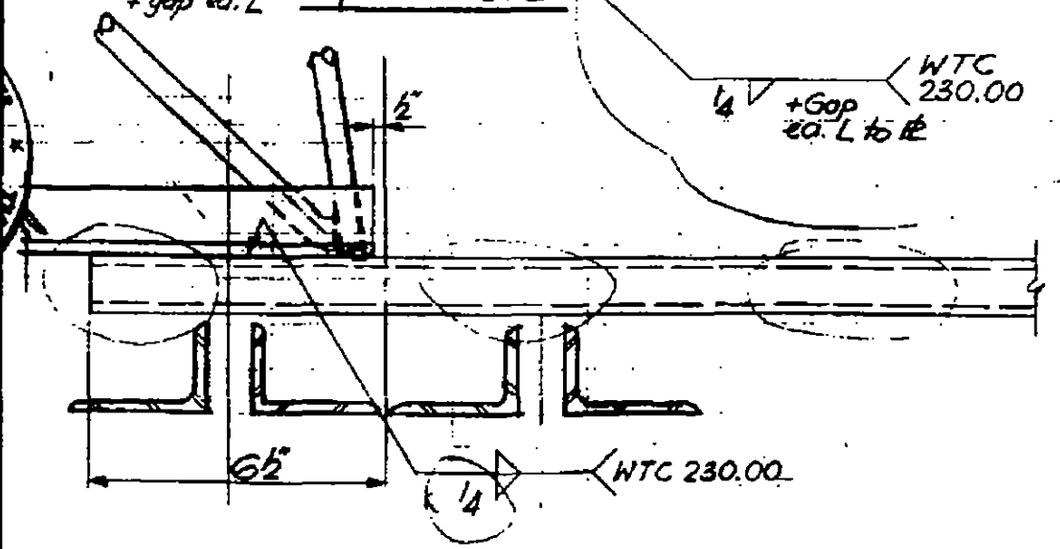

Bottom Chord

E39

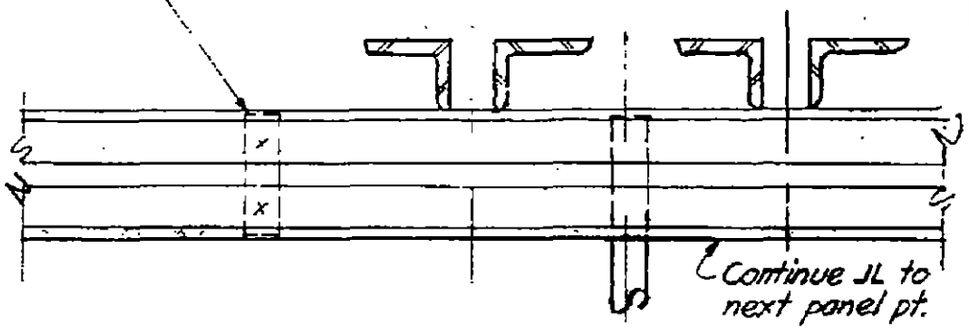

Top Chord

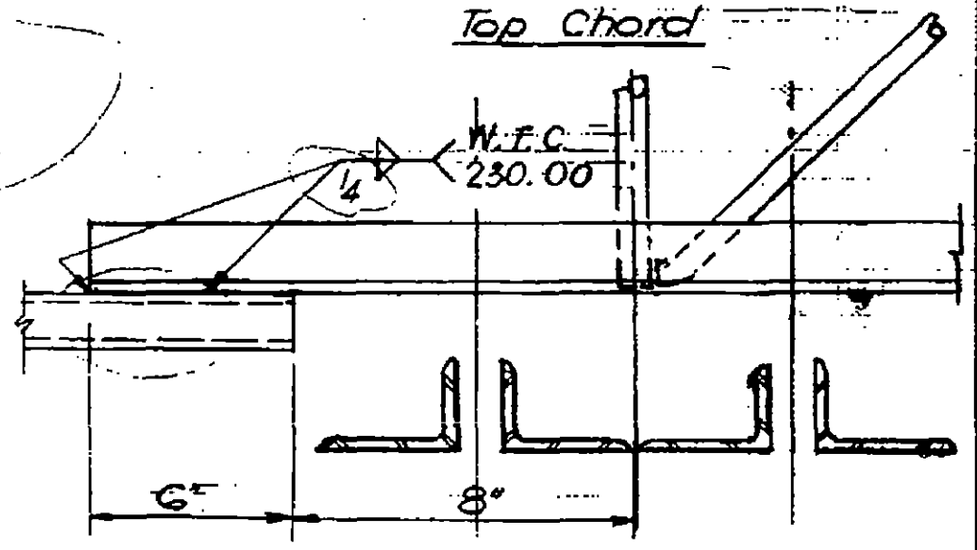

Bottom Chord

E38

7-AB4-

LICENSED PROFESSIONAL ENGINEER
LESLIE E. ROBERTSON
No. 34360
STATE OF NEW YORK

SKILLING - HELLE - CHRISTIANSEN - ROBERTSON Structural & Civil Engineers

PROJECT THE WORLD TRADE CENTER | TITLE FLOOR PANEL DETAIL E40, E40A, E45, E45A | DATE 1-3-68

REVISIONS

7-22-68
1-6-69

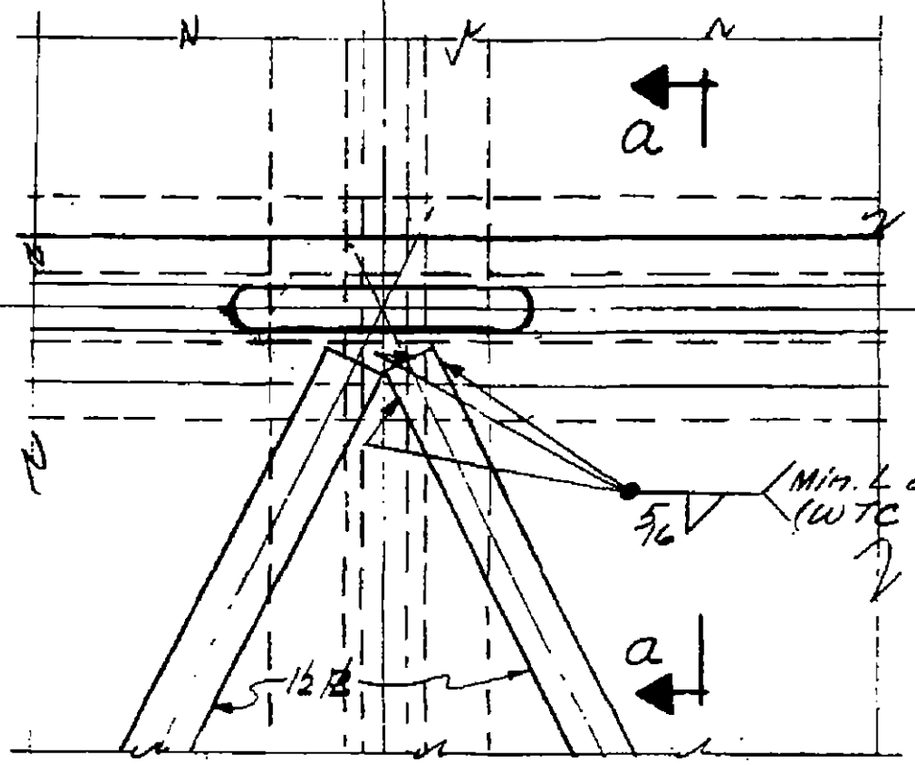

PLAN - DET. E40

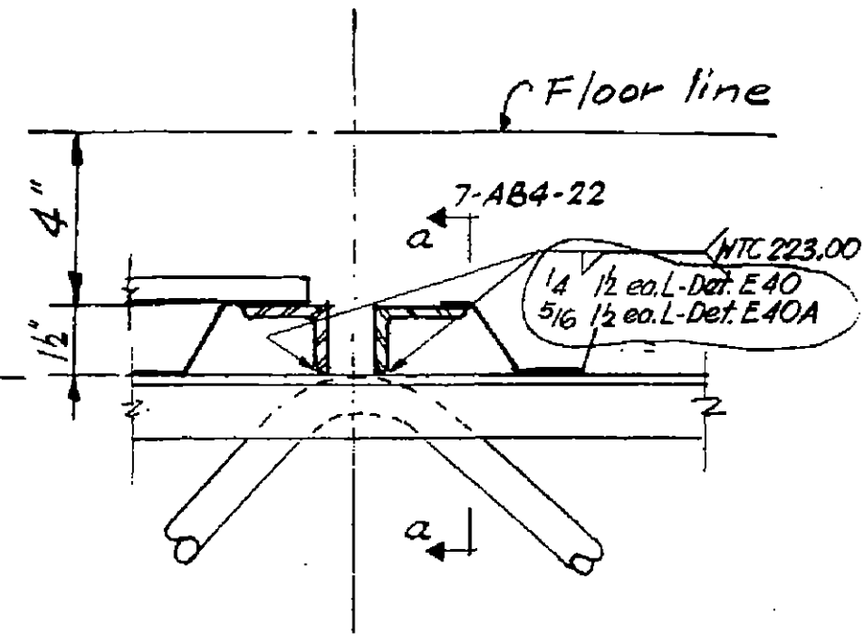

Section a-a

Detail E40 E40A

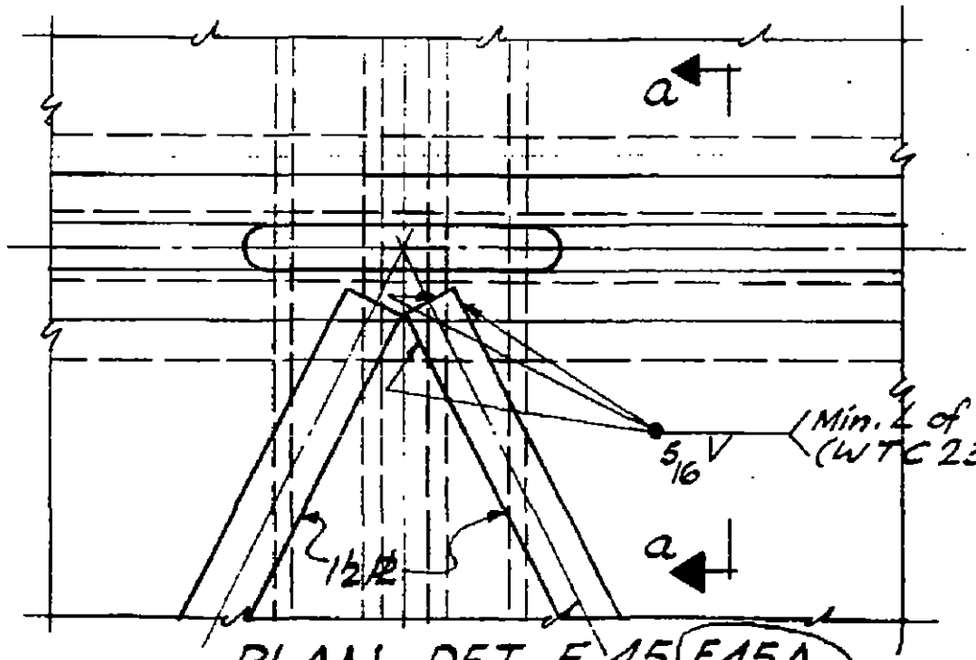

PLAN - DET. E45 E45A

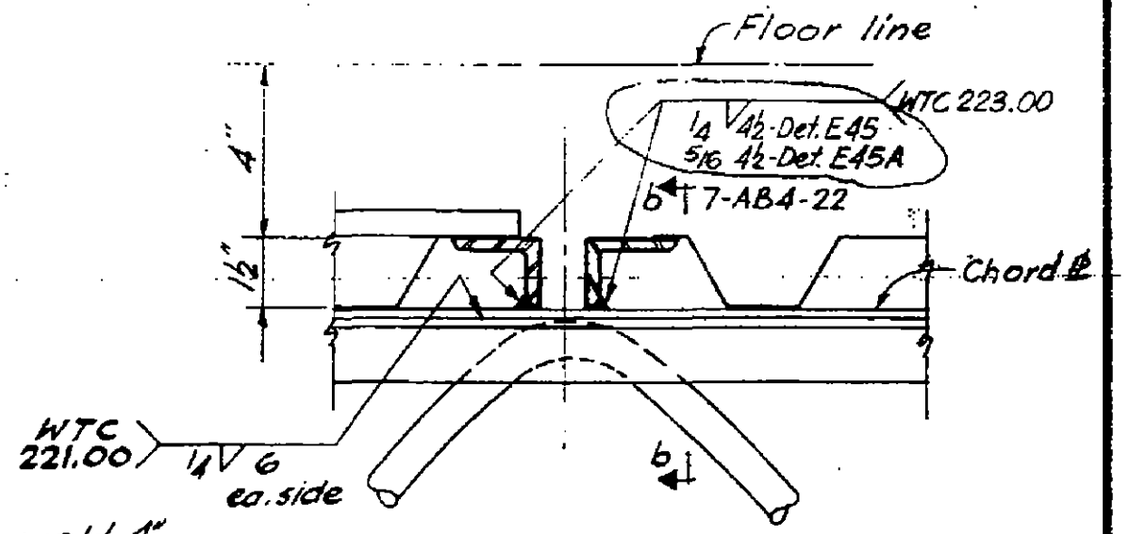

Section a-a

Detail E45 E45A

7-AB4-21

REGISTERED PROFESSIONAL ENGINEER
LESLIE E. ROBERTSON
No. 34360
UNIVERSITY OF THE STATE OF NEW YORK

SKILLING, HELLE, CHRISTIANSEN, ROBERTSON — Structural & Civil Engineers

PROJECT THE WORLD TRADE CENTER | TITLE FLOOR PANEL - DETAIL E41, E41A, E41C, E41E & E41D | DATE 1-3-68

REVISIONS

7-22-68
1-6-69

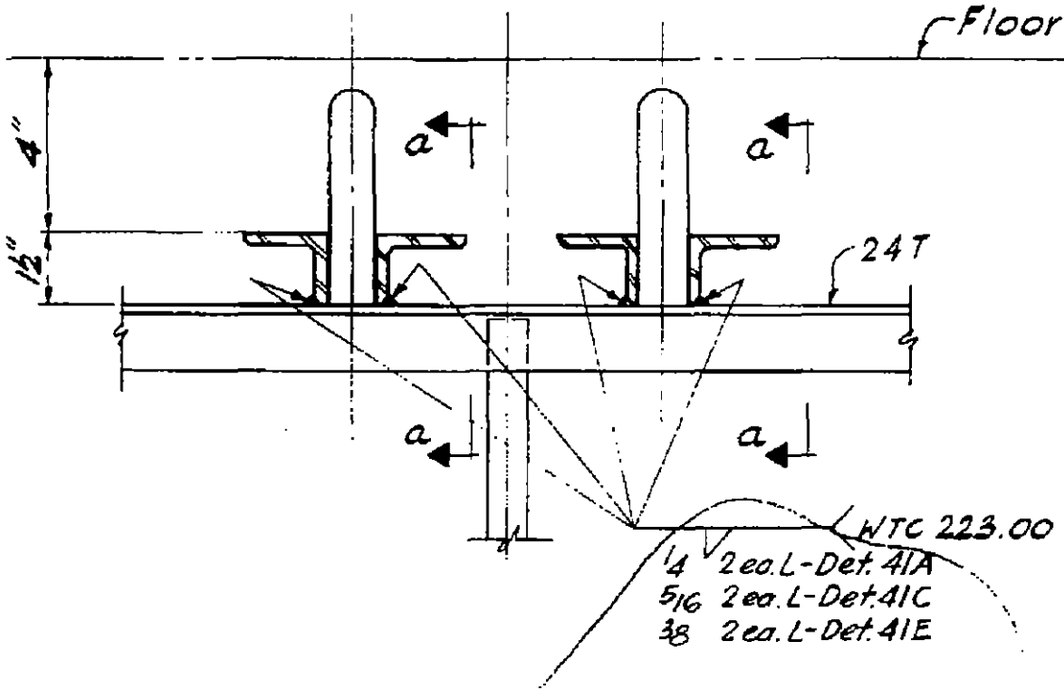

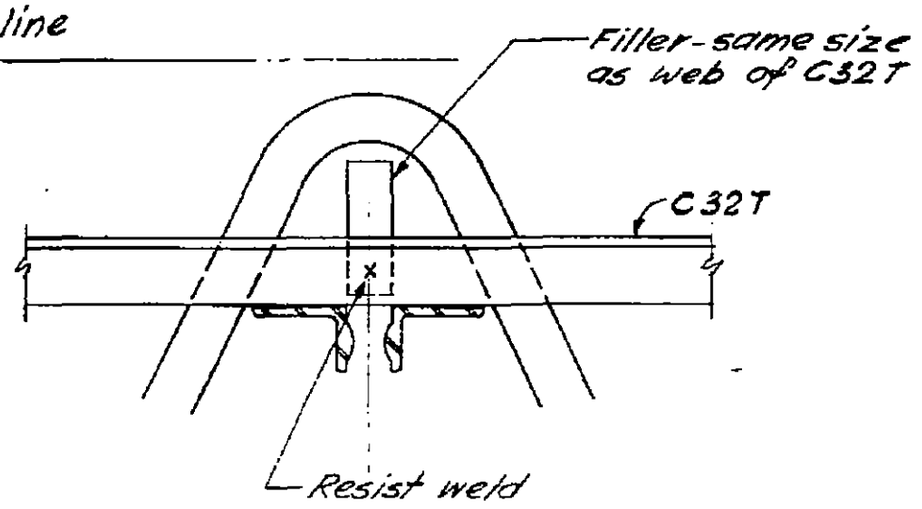

Section a-a

Section c-c similar except as noted.

Detail E41A, E41C, E41E

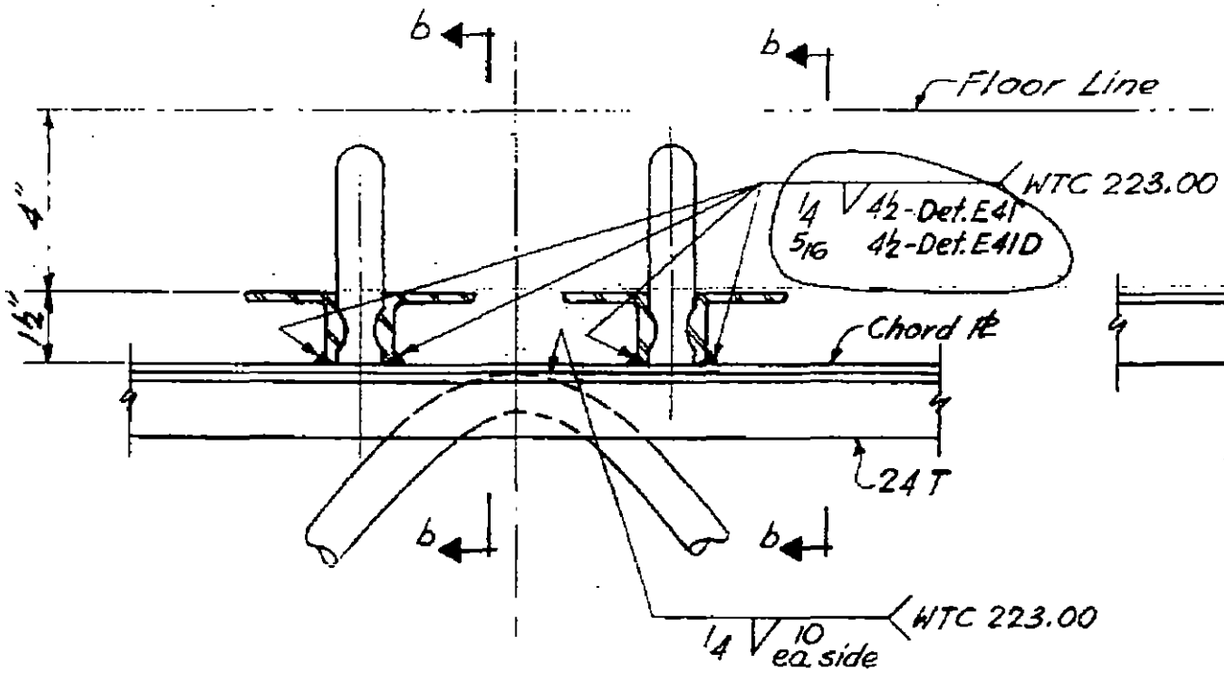

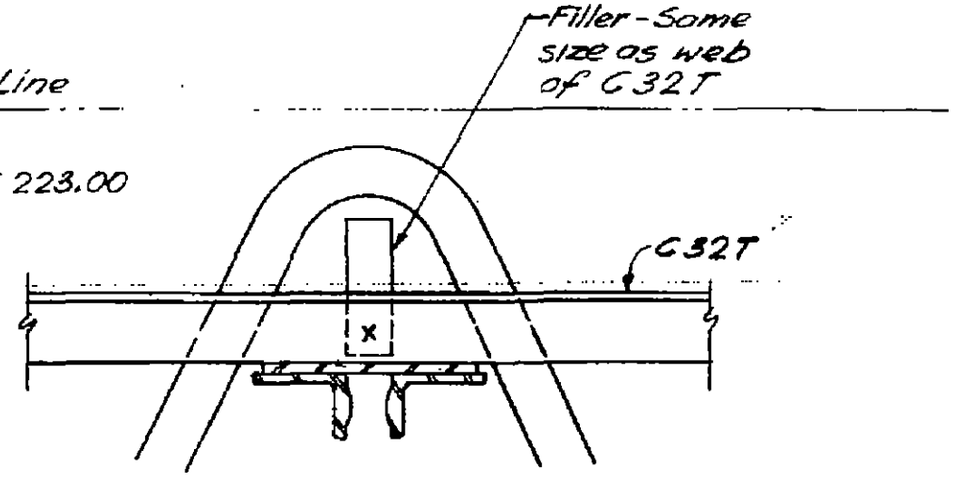

Section b-b

Detail E41, E41D

LICENSED PROFESSIONAL ENGINEER
LESLIE E. ROBERTSON
No. 34360
UNIVERSITY OF THE STATE OF NEW YORK

DESIGNED

DRAWN

REVIEWED

57 –

7-AB4-22

SKILLING, HELLE, CHRISTIANSEN, ROBERTSON — Structural & Civil Engineers

PROJECT: THE WORLD TRADE CENTER | TITLE: FLOOR PANEL - DETAIL E 41B & E 46 | DATE: 7-22-68

REVISIONS

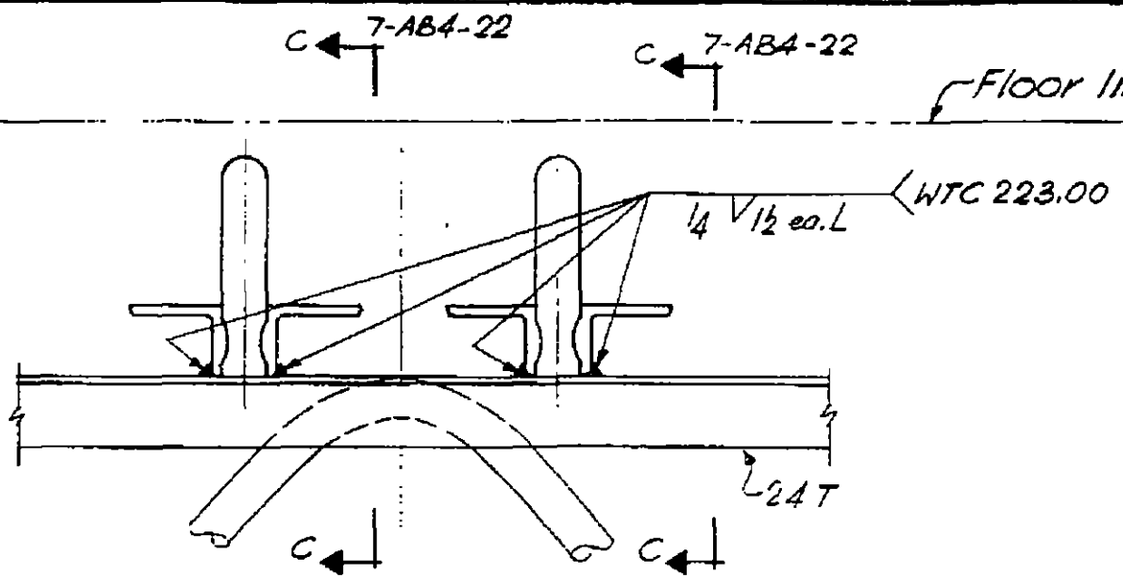

Detail E 46

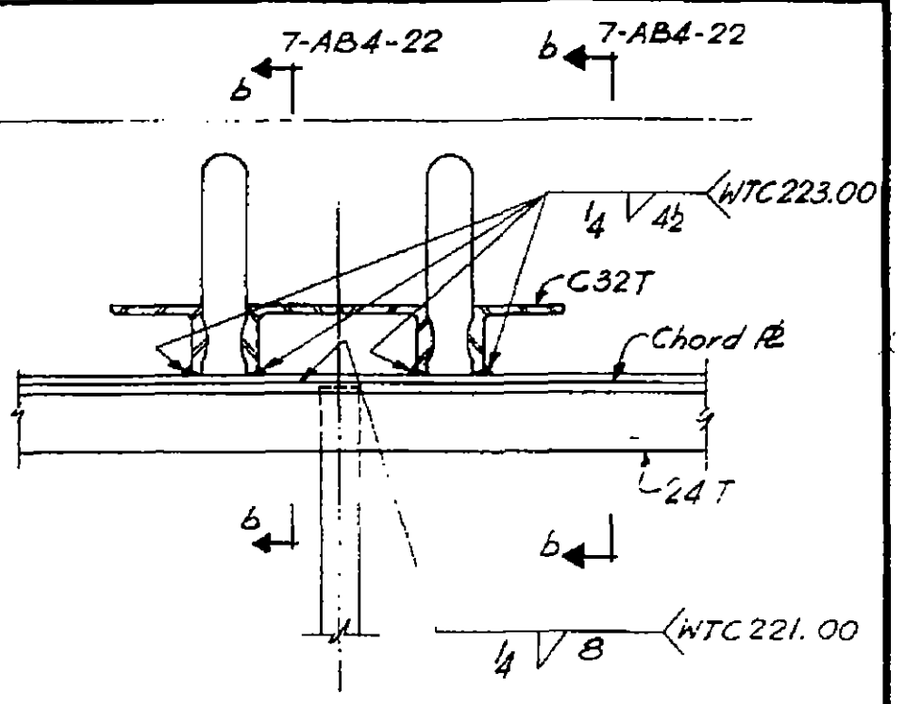

Detail E 41B

LICENSED PROFESSIONAL ENGINEER
LESLIE E. ROBERTSON
No. 34360
UNIVERSITY OF THE STATE OF NEW YORK

DESIGNED

DRAWN

REVIEWED

25

7-AB4-22.1

SKILLING - HELLE - CHRISTIANSEN - ROBERTSON Structural & Civil Engineers

PROJECT THE WORLD TRADE CENTER TITLE FLOOR PANEL - DETAIL E42 DATE 1-3-68

REVISIONS

4-1-68
7-22-68

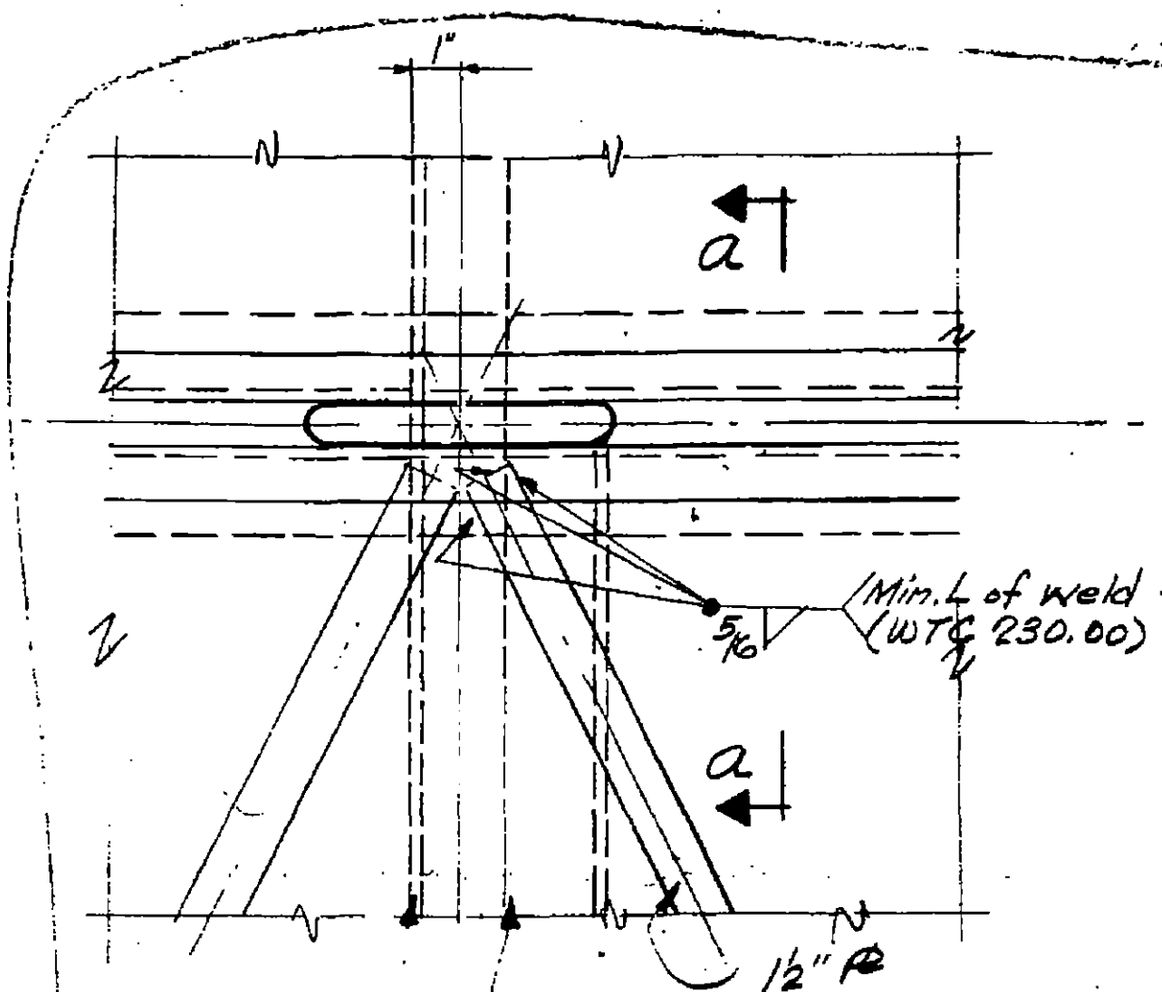

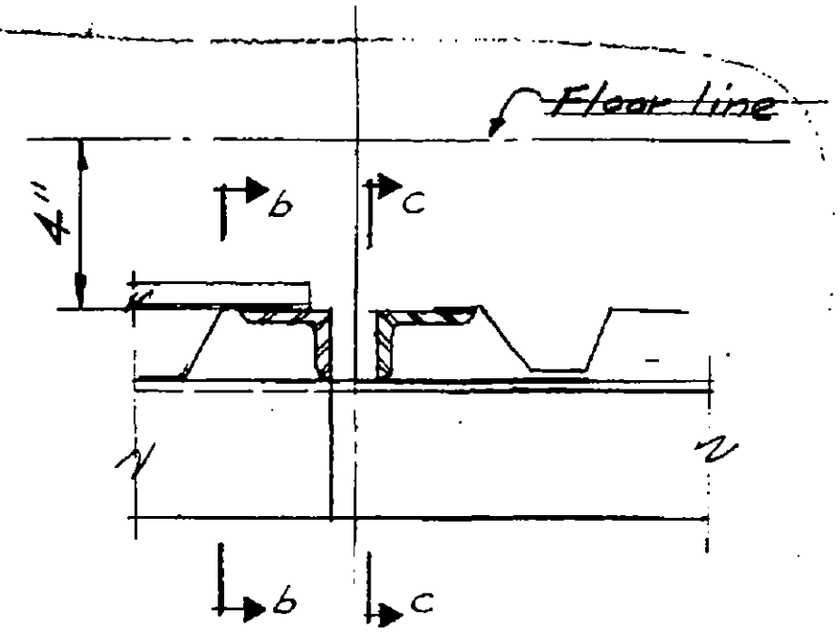

Section a-a

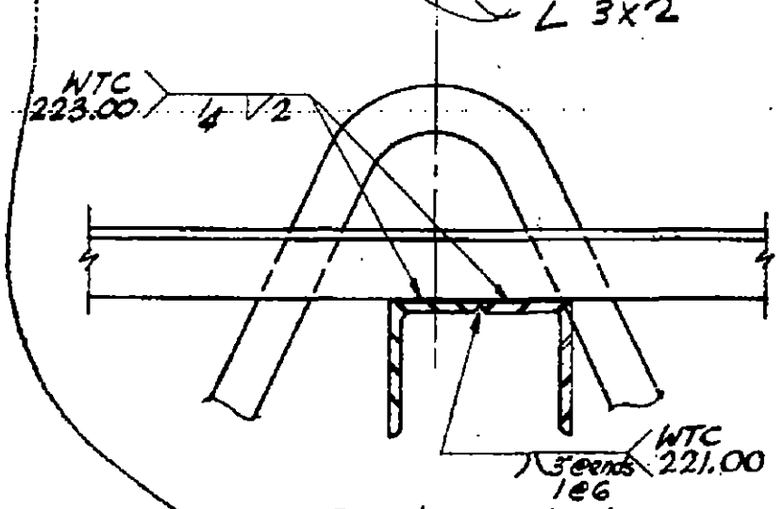

Section b-b

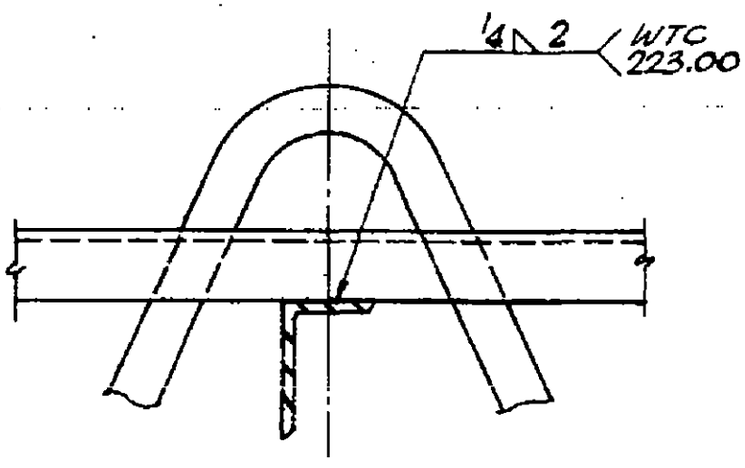

Section c-c

LICENSED PROFESSIONAL ENGINEER
LESLIE E. ROBERTSON
No. 34360
UNIVERSITY OF THE STATE OF NEW YORK

76

7-AB4-2

SKILLING - HELLE - CHRISTIANSEN - ROBERTSON Structural & Civil Engineers

PROJECT THE WORLD TRADE CENTER | TITLE FLOOR PANEL - DETAIL E43 | DATE 1-3-68

REVISIONS

7-1-68
7-22-68
10-15-68

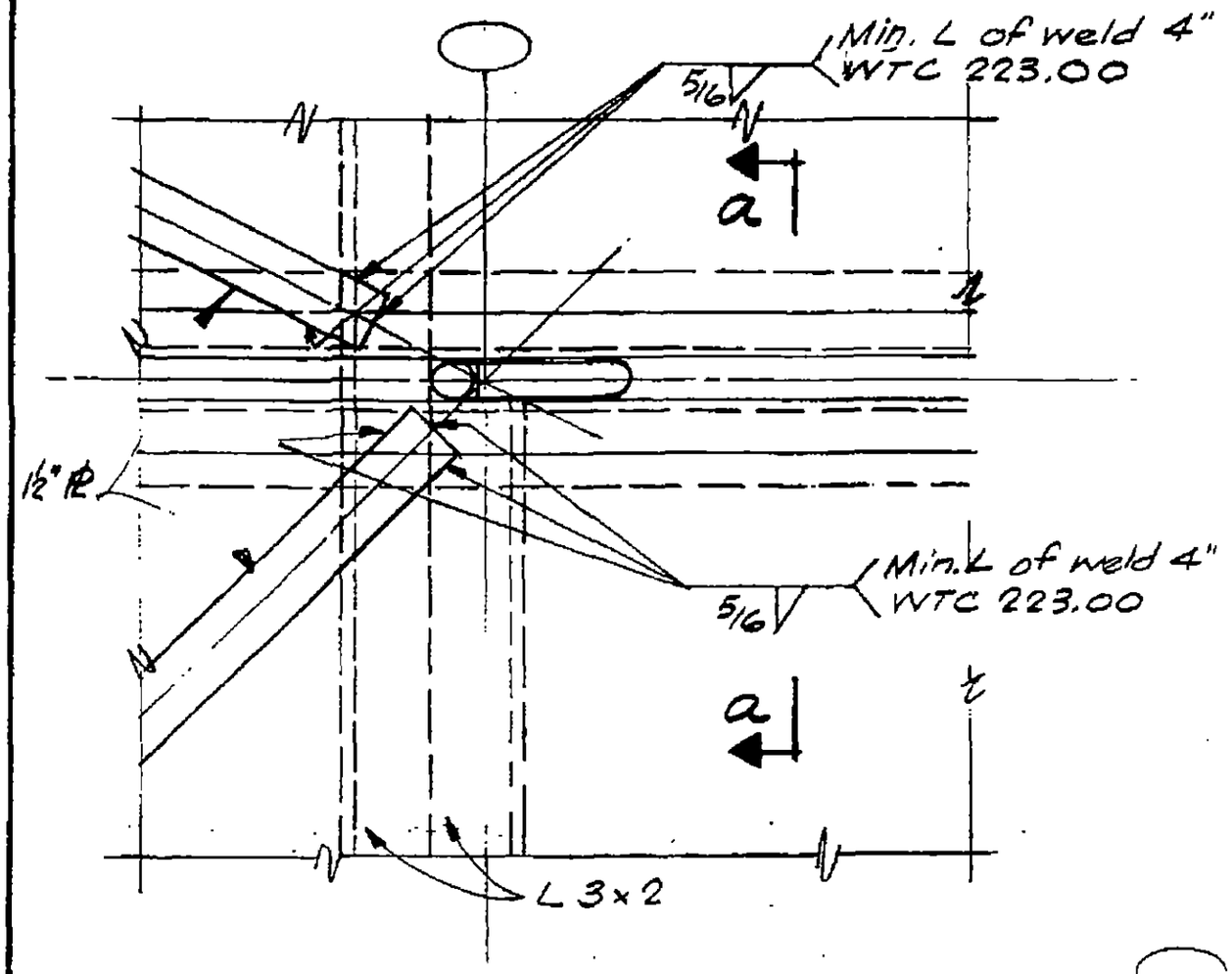

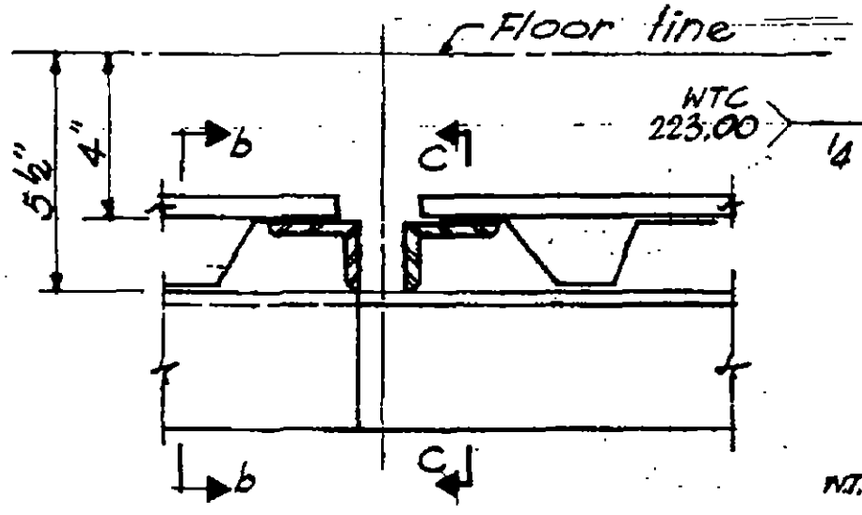

Section a-a

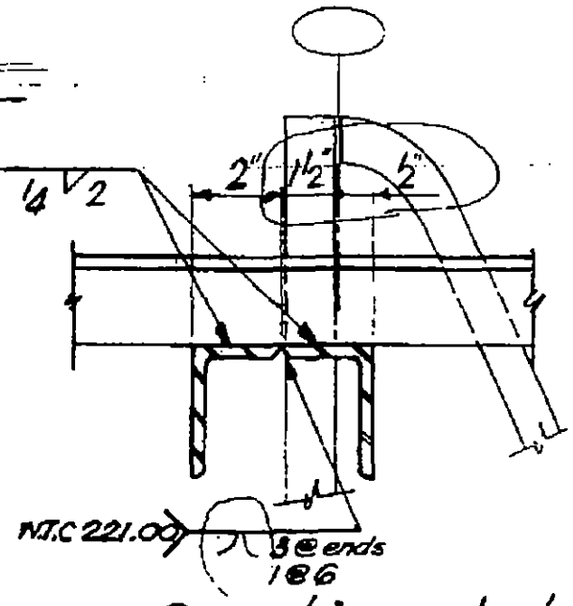

Section b-b

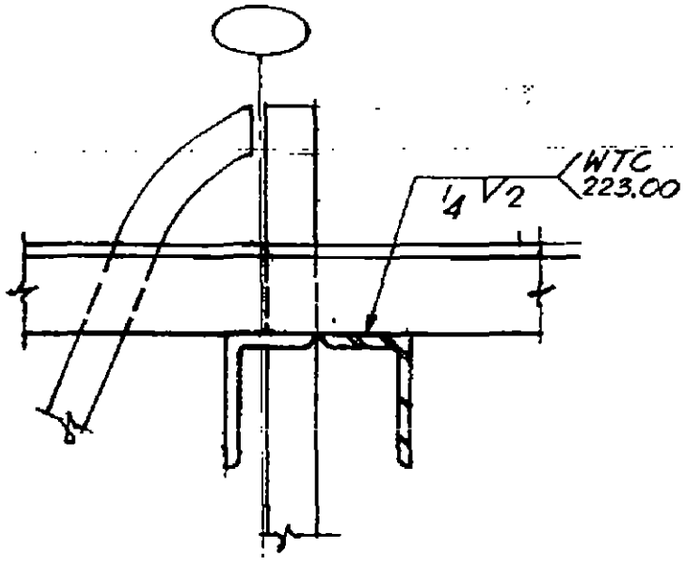

Section c-c

LICENSED PROFESSIONAL ENGINEER
LESLIE E. ROBERTSON
No. 34160
REGISTERED IN THE STATE OF NEW YORK

7-AB4-

SKILLING - HELLE - CHRISTIANSEN - ROBERTSON Structural & Civil Engineers

PROJECT THE WORLD TRADE CENTER | TITLE FLOOR PANEL - DETAIL E44 | DATE 1-3-68

REVISIONS

4-1-68
7-22-68

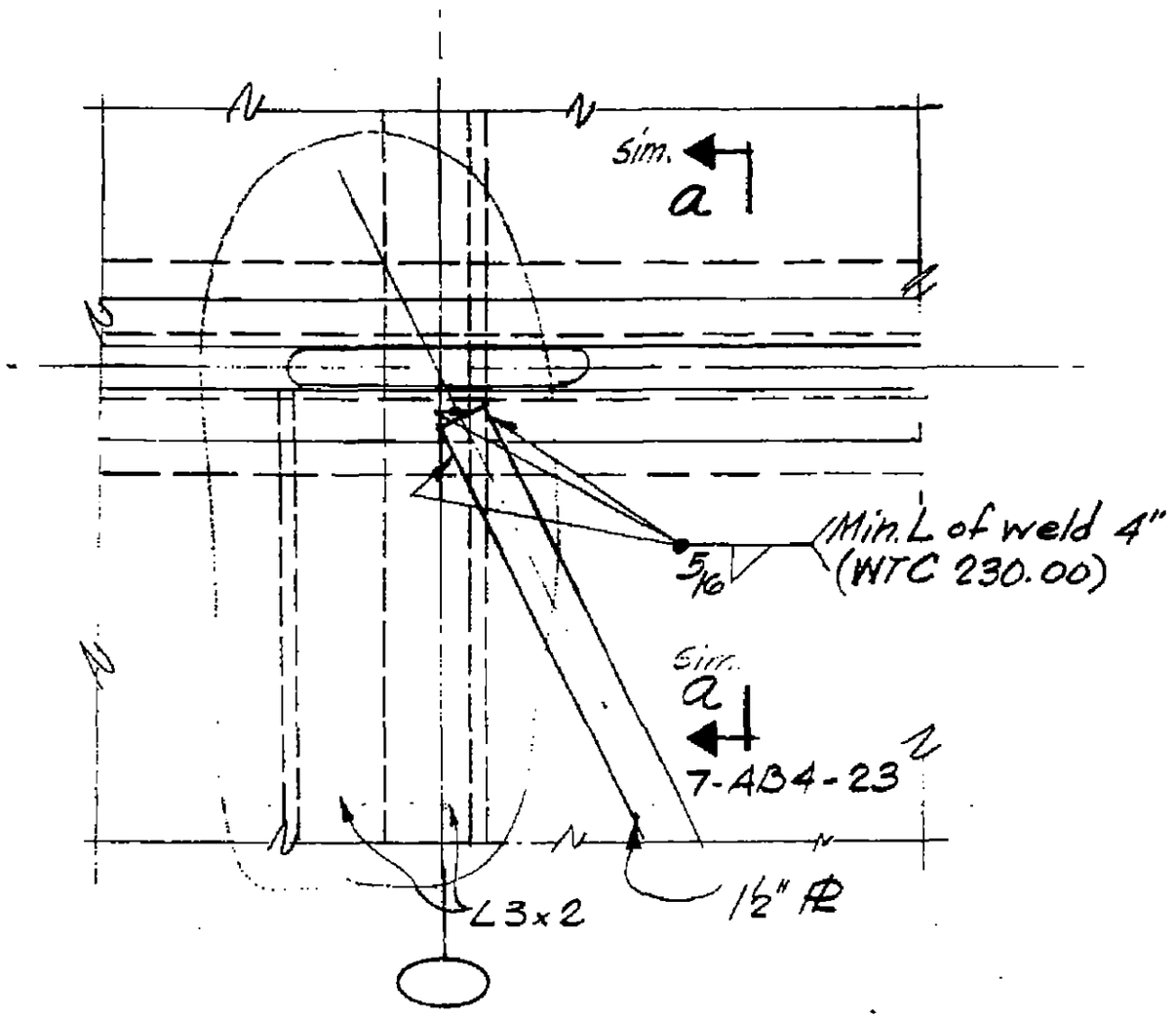

28

7-AB4-25

SKILLING - HELLE - CHRISTIANSEN - ROBERTSON — Structural & Civil Engineers

PROJECT THE WORLD TRADE CENTER | TITLE FLOOR PANEL - DETAIL E47 & E48 | DATE 1-3-68

REVISIONS

1 7-22-68

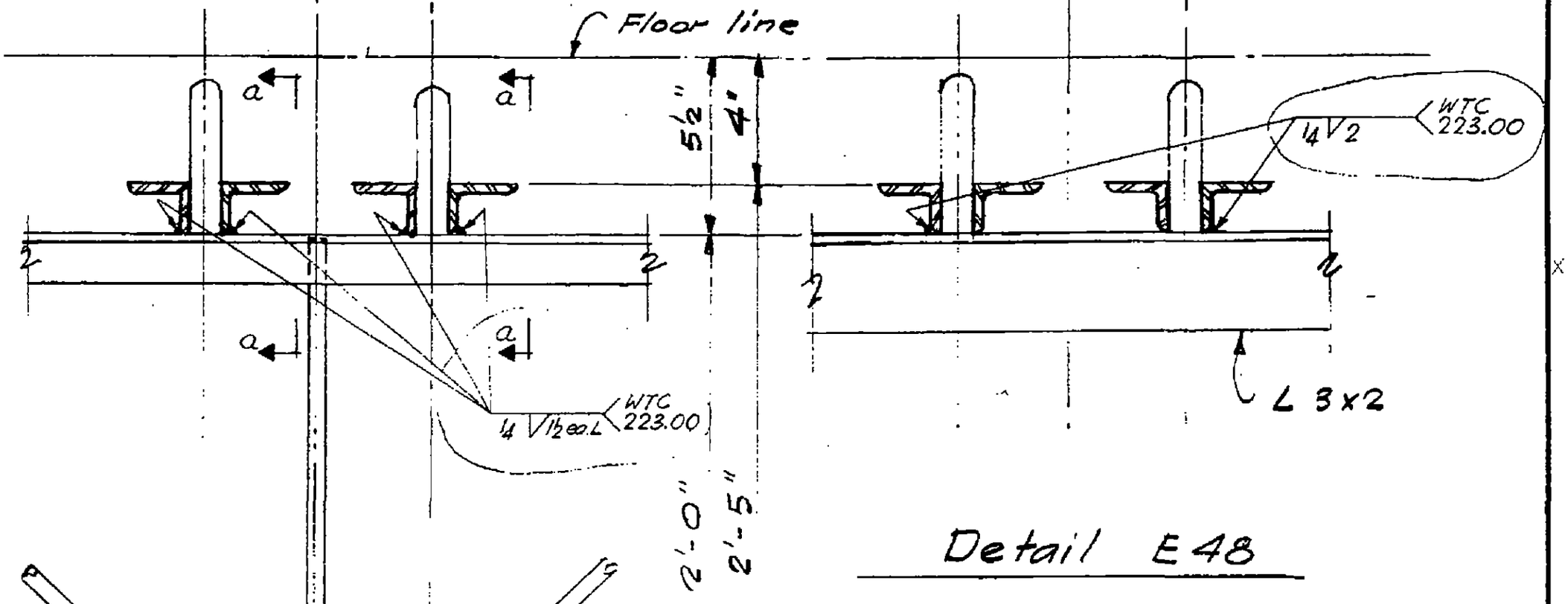

Detail E48

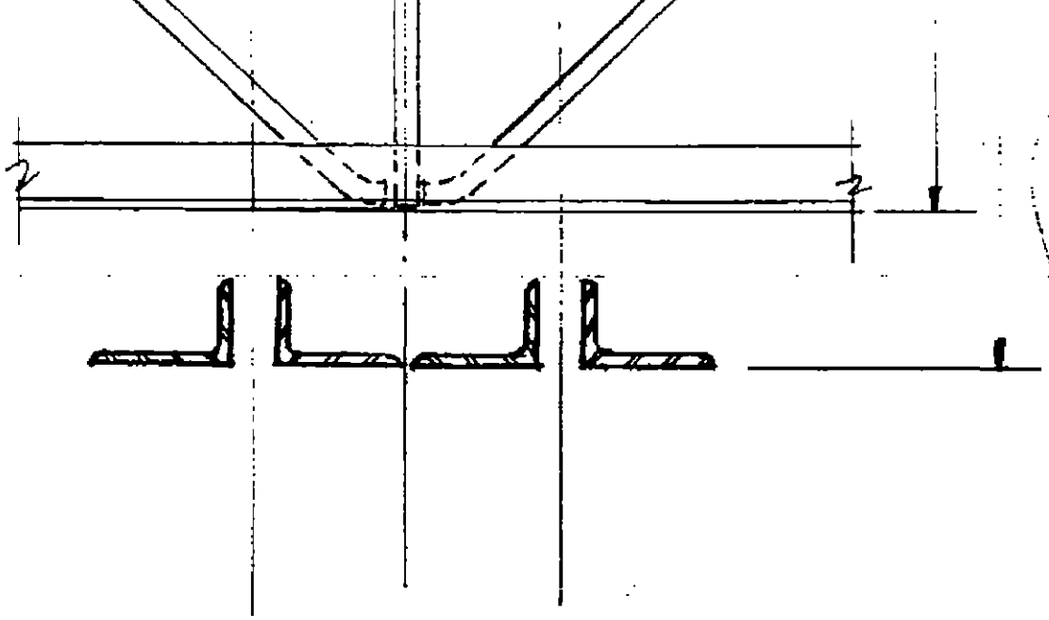

Detail E47

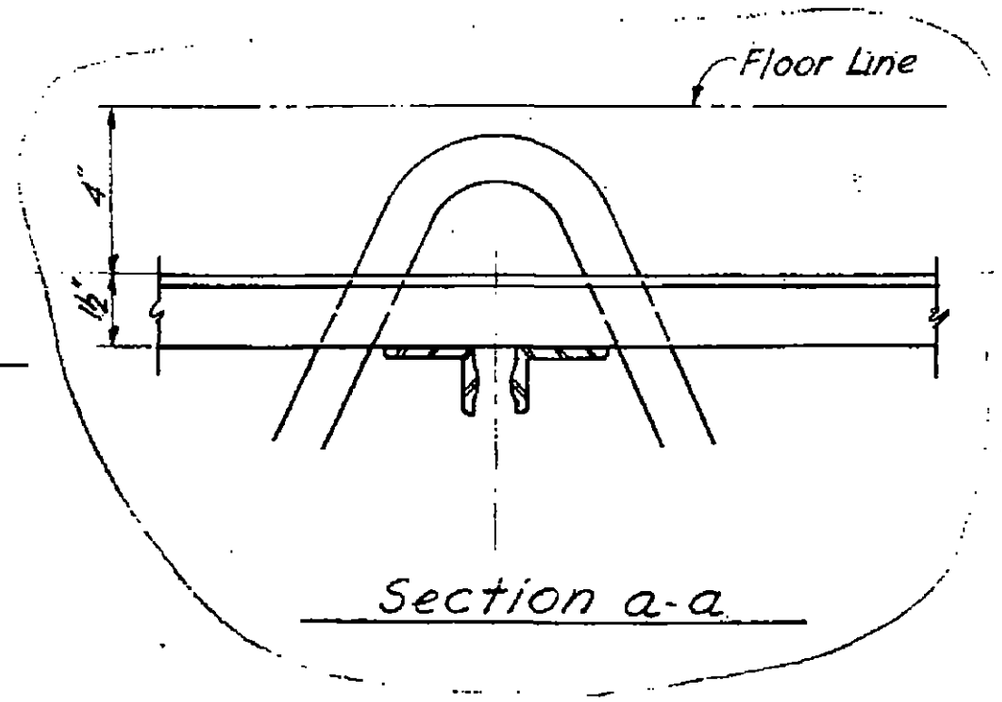

Section a-a

LESLIE E. ROBERTSON
No. 34360
UNIVERSITY OF THE STATE OF NEW YORK

7-AB4-

SKILLING, HELLE, CHRISTIANSEN, ROBERTSON — Structural & Civil Engineers

PROJECT: THE WORLD TRADE CENTER | TITLE: FLOOR PANEL - DETAIL E47A | DATE: 7-22-68

REVISIONS

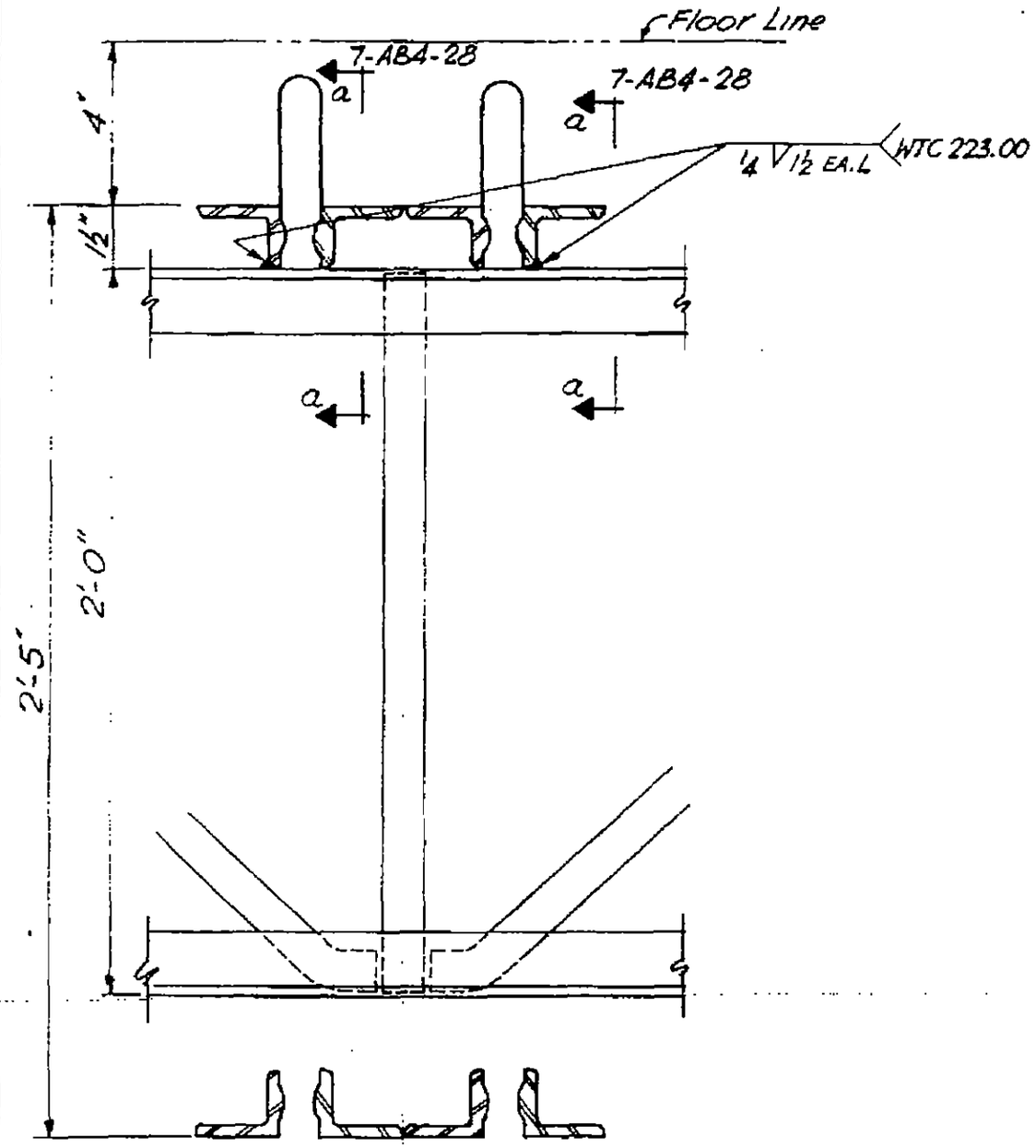

LICENSED PROFESSIONAL ENGINEER
LESLIE E. ROBERTSON
No. 34360
UNIVERSITY OF THE STATE OF NEW YORK

DESIGNED

DRAWN

REVIEWED
90

7-AB4-28.1

SKILLING - HELLE - CHRISTIANSEN - ROBERTSON Structural & Civil Engineers

PROJECT THE WORLD TRADE CENTER | TITLE FLOOR PANEL DETAIL E49, E49A | DATE 10-20-67

REVISIONS

1-3-68

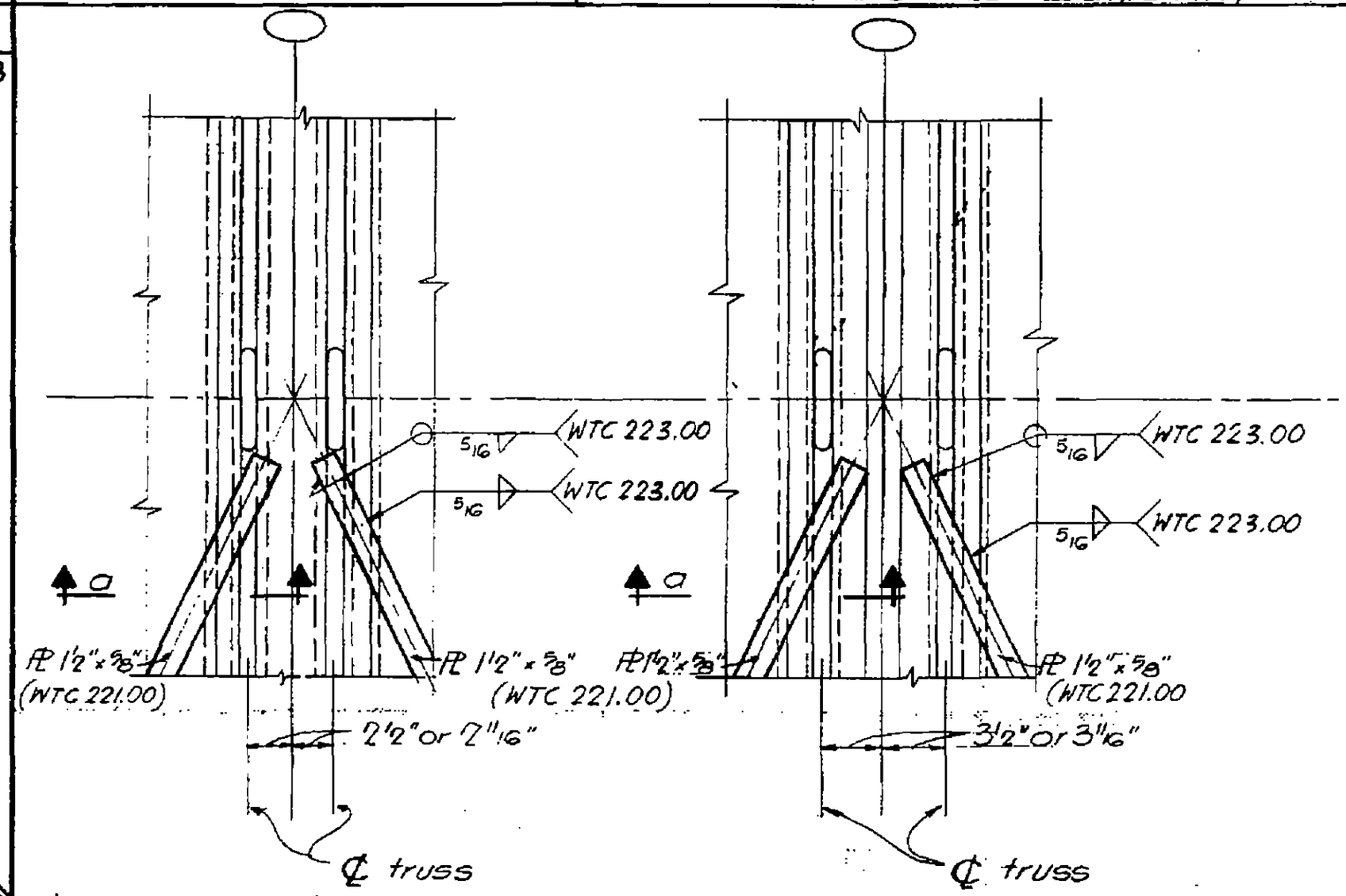

Detail E49 | Detail E49A

Note - For exterior end of PL 1½"×⅝" see Det. E50, E51 & E52

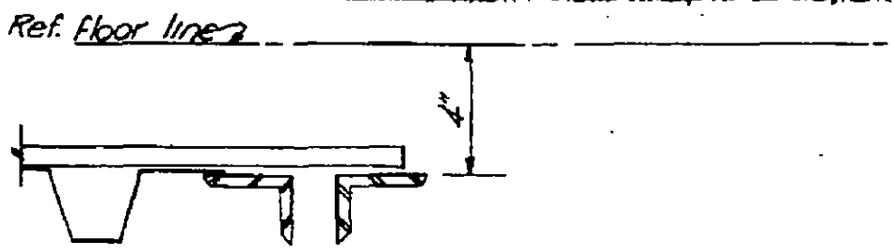

Section a-a

7-AB4-29

80

SKILLING - HELLE - CHRISTIANSEN - ROBERTSON Structural & Civil Engineers

PROJECT THE WORLD TRADE CENTER | TITLE FLOOR PANEL DETAIL E50 | DATE 10-20-67

REVISIONS
1-3-68
4-1-68

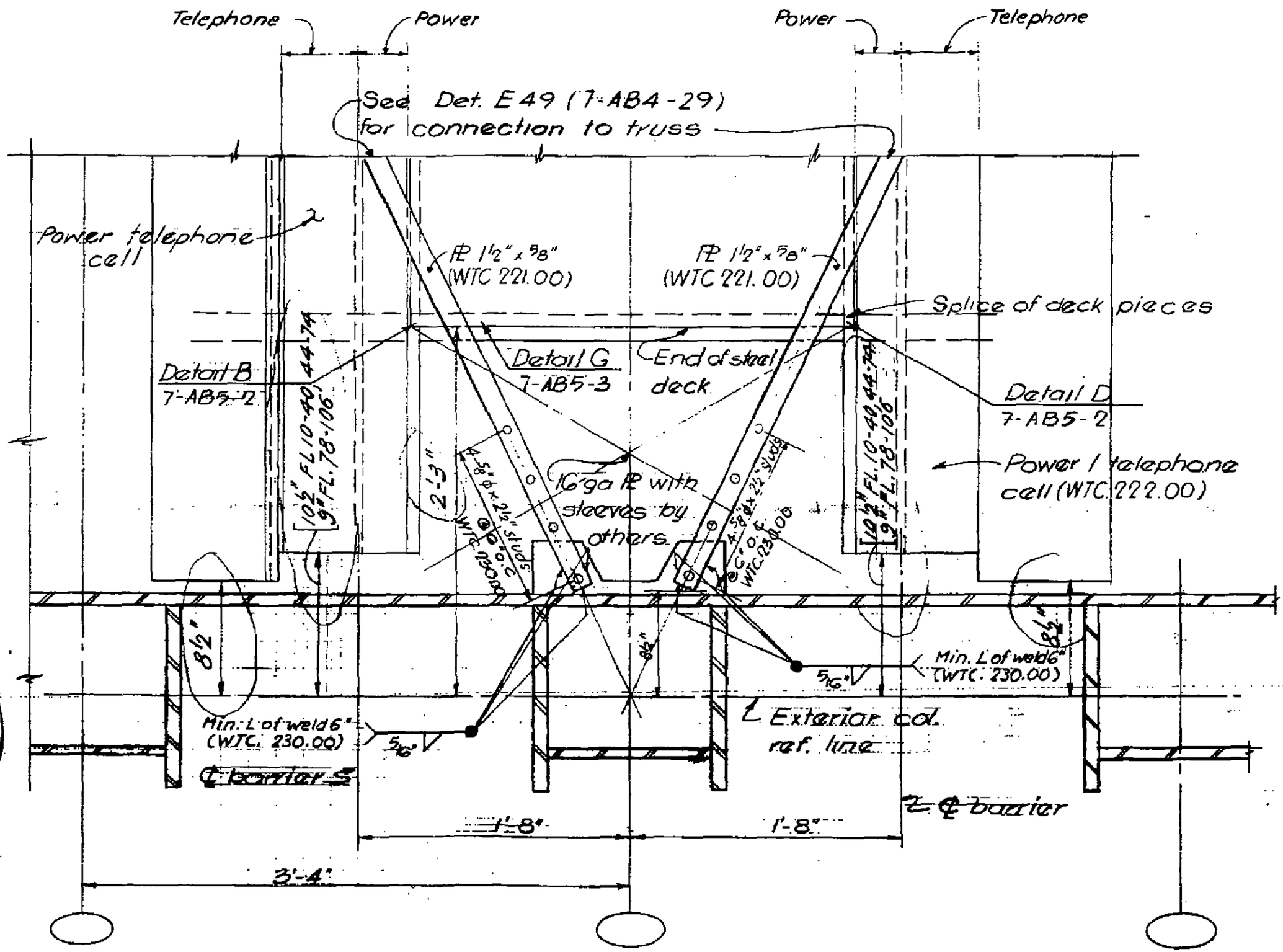

7-AB4-30

SKILLING - HELLE - CHRISTIANSEN - ROBERTSON Structural & Civil Engineers

PROJECT THE WORLD TRADE CENTER | TITLE FLOOR PANEL DETAIL E51(A) | DATE 10-20-67

REVISIONS
1-3-68
4-1-68

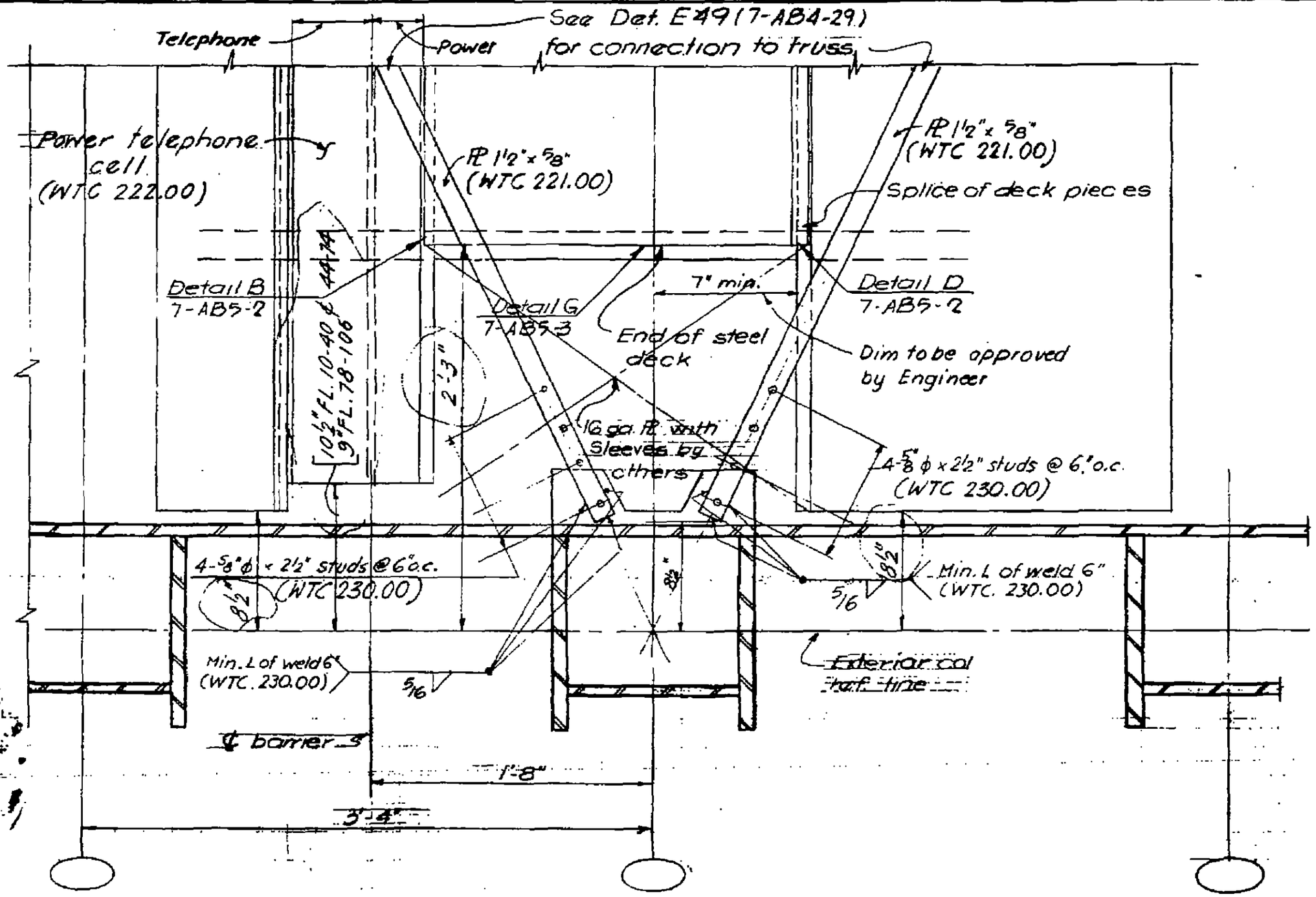

7-AB4-31

SKILLING - HELLE - CHRISTIANSEN - ROBERTSON Structural & Civil Engineers

PROJECT THE WORLD TRADE CENTER | TITLE FLOOR PANEL DETAIL E51B & E51C | DATE 4-1-68

REVISIONS

Note:
See Detail E51A for all information not shown.

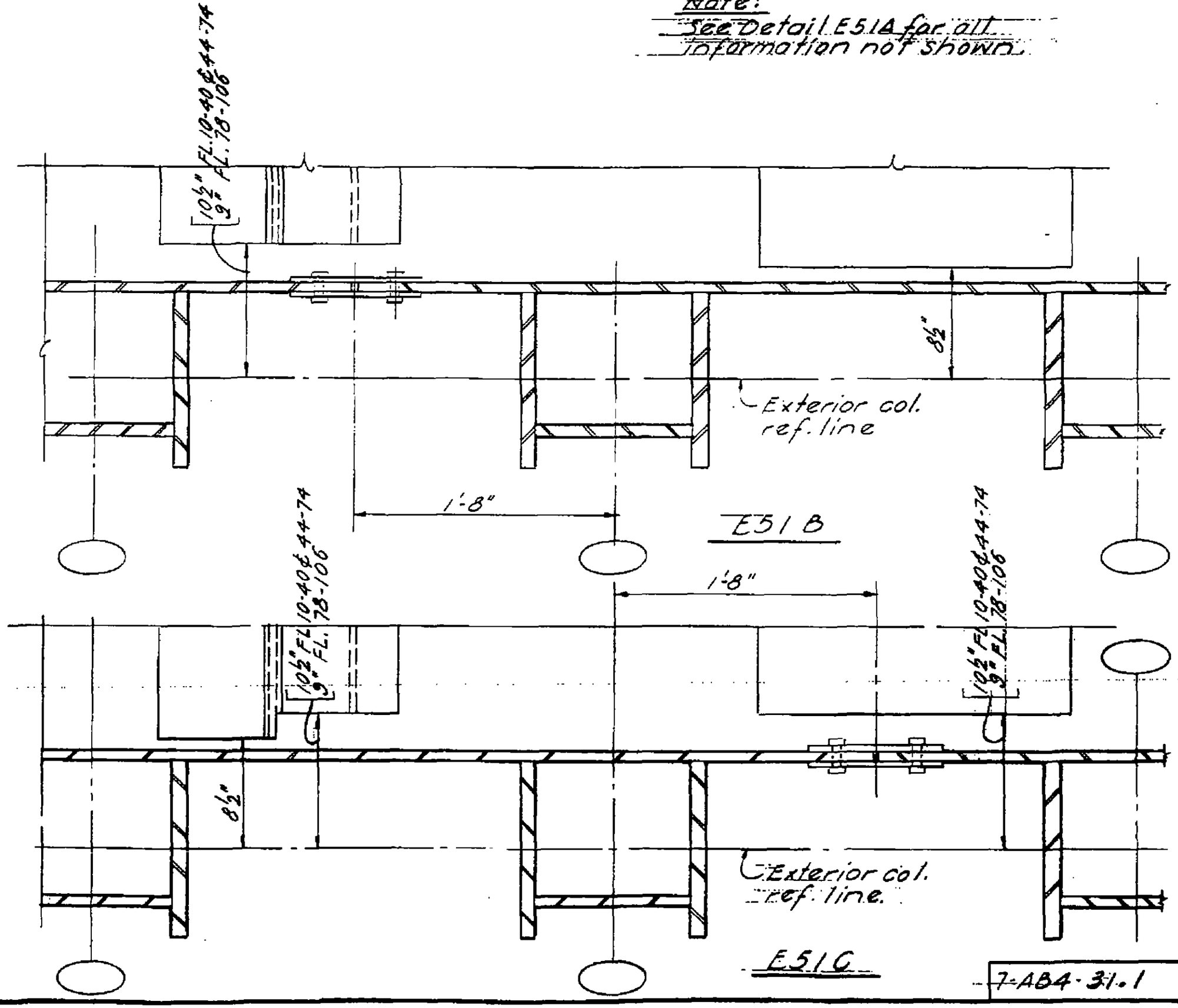

LICENSED PROFESSIONAL ENGINEER
LESLIE E. ROBERTSON
No. 34360
STATE OF NEW YORK

7-AB4-31.1

SKILLING, HELLE, CHRISTIANSEN, ROBERTSON — Structural & Civil Engineers

PROJECT: THE WORLD TRADE CENTER

TITLE: FLOOR PANEL - DETAIL E 51D, E52D

DATE: 1-20-69

REVISIONS

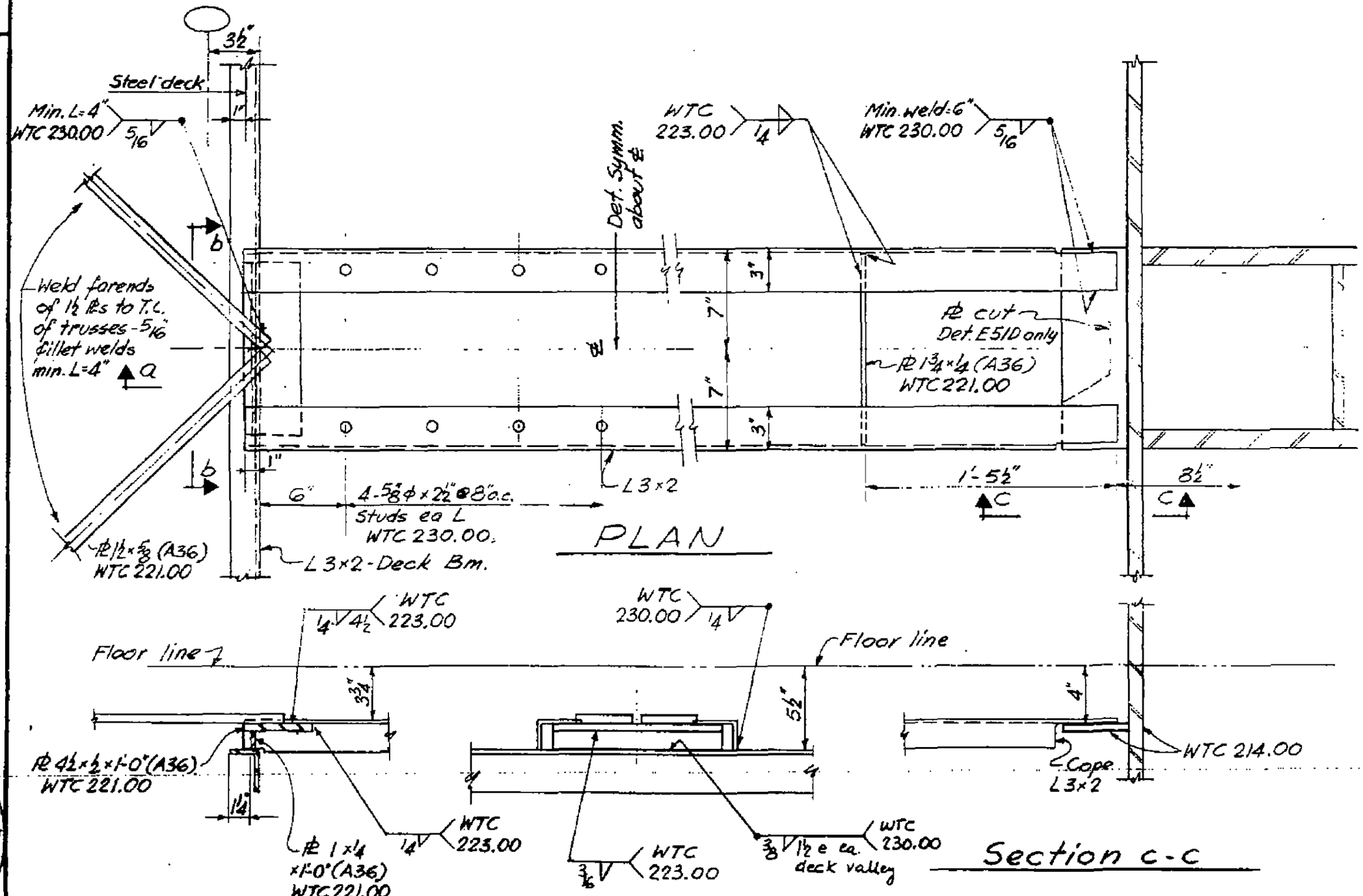

LICENSED PROFESSIONAL ENGINEER
LESLIE E. ROBERTSON
No. 34360
UNIVERSITY OF THE STATE OF NEW YORK

DESIGNED

DRAWN

REVIEWED

7-AB4-31.2

SKILLING - HELLE - CHRISTIANSEN - ROBERTSON Structural & Civil Engineers

PROJECT THE WORLD TRADE CENTER | TITLE FLOOR PANEL DETAIL E52A | DATE 10-20-67

REVISIONS
1-3-68
4-1-68

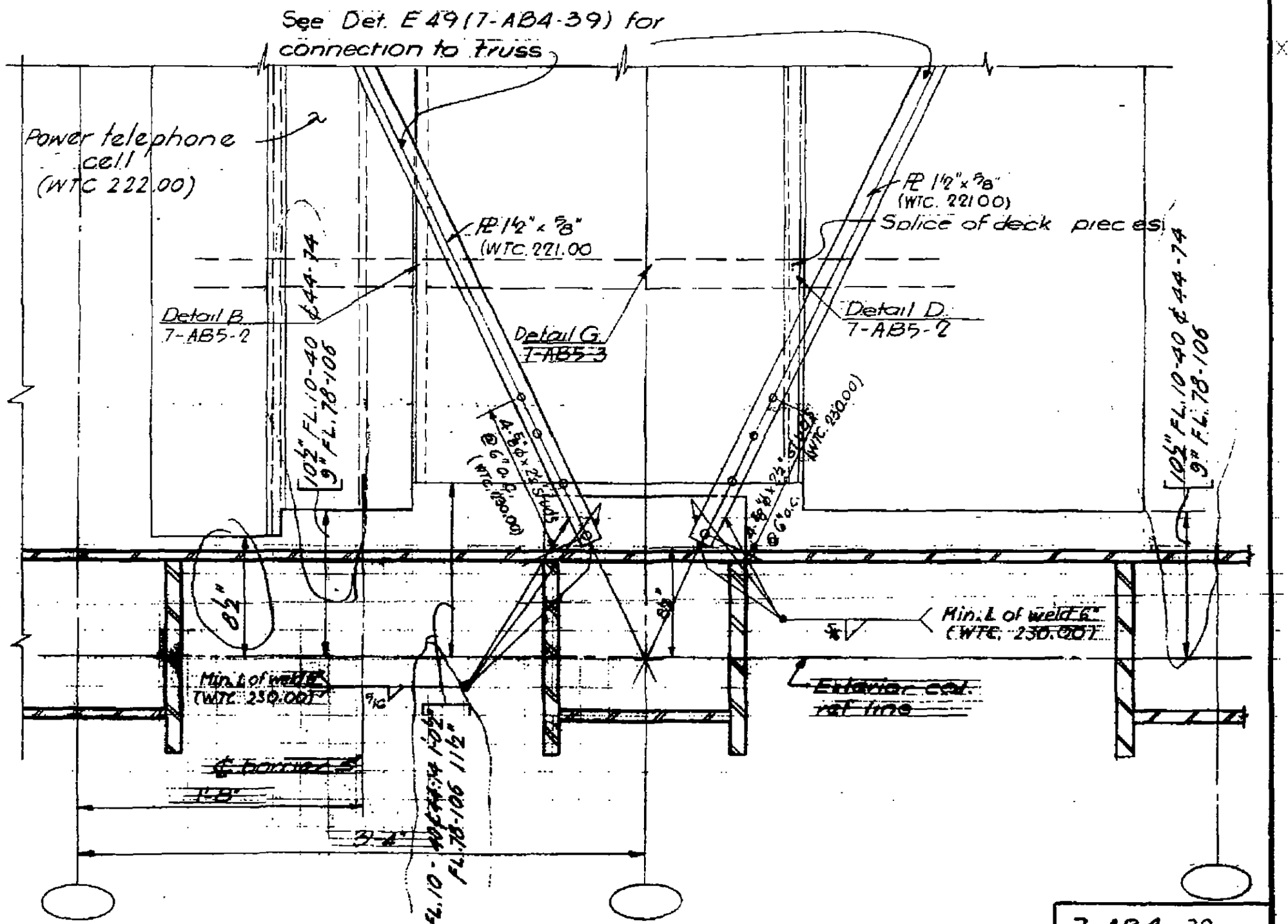

7-AB4-32

SKILLING - HELLE - CHRISTIANSEN - ROBERTSON Structural & Civil Engineers

PROJECT THE WORLD TRADE CENTER | TITLE FLOOR PANEL DETAIL E52B & E52C | DATE 4-1-68

REVISIONS

Note:
See Detail E52A for all information not shown.

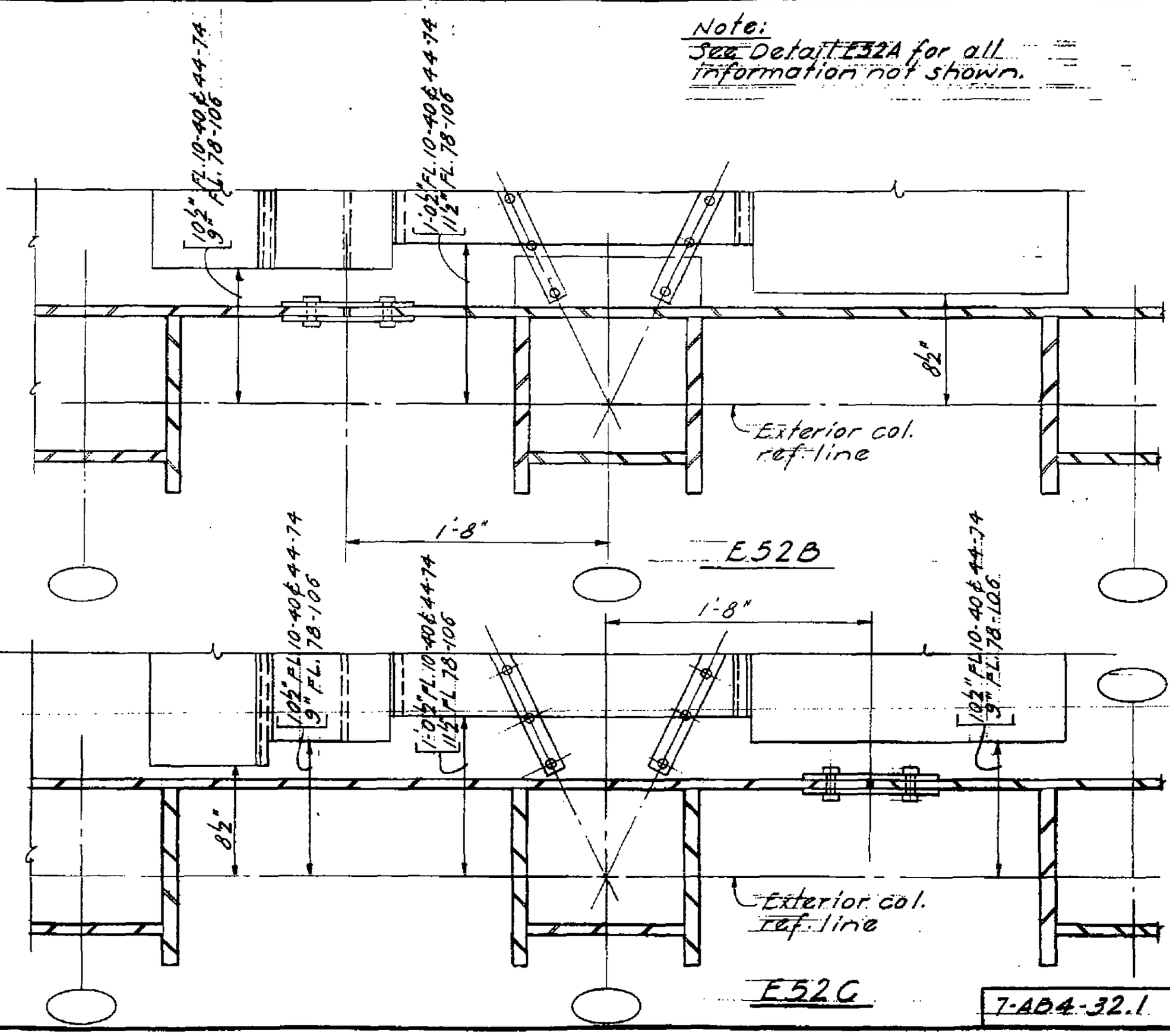

LICENSED PROFESSIONAL ENGINEER LESLIE E. ROBERTSON NEW YORK

7-AB4-32.1

85

SKILLING - HELLE - CHRISTIANSEN - ROBERTSON Structural & Civil Engineers

PROJECT THE WORLD TRADE CENTER | TITLE FLOOR PANEL DETAIL E 53 | DATE 1-3-68

REVISIONS

4-1-68

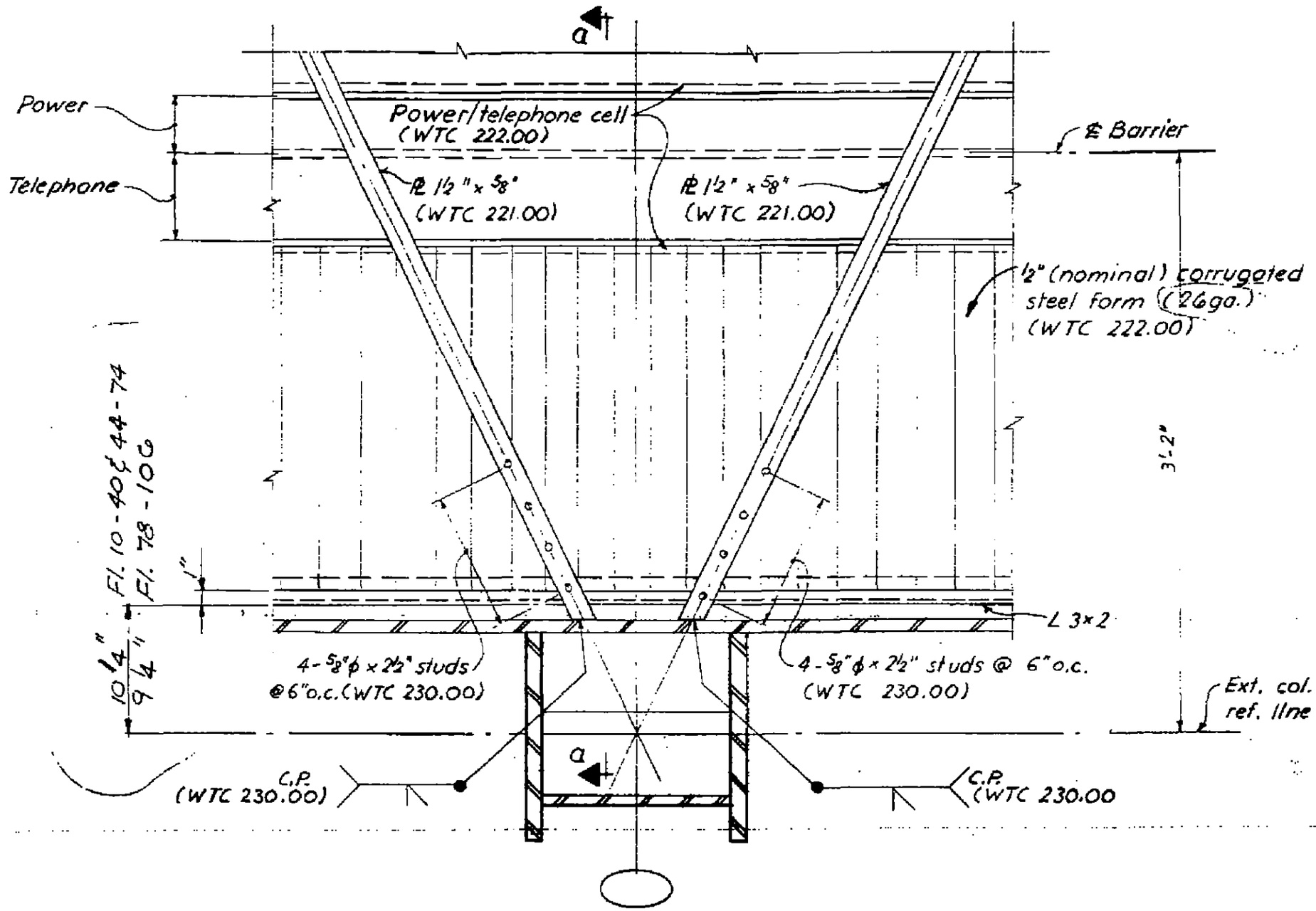

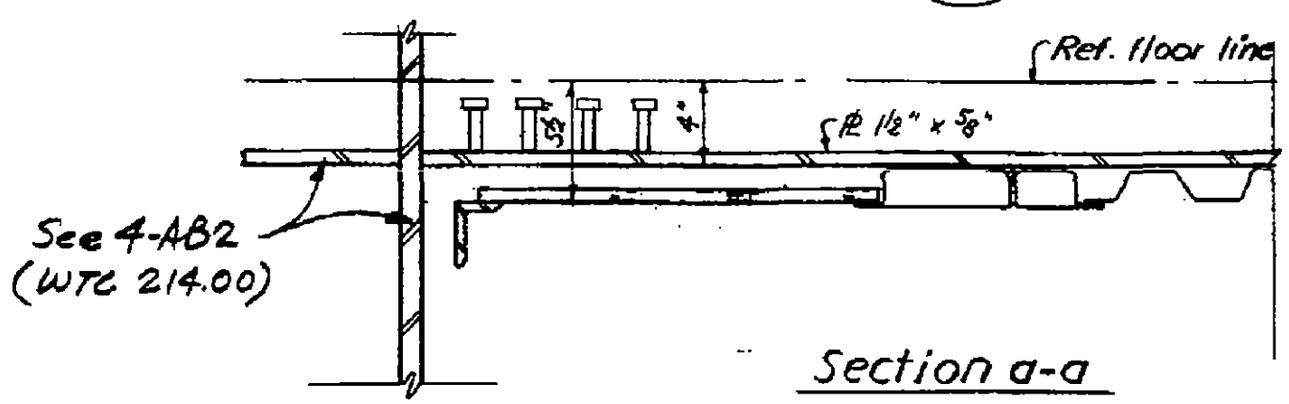

Section a-a

7-AB4-33

86

SKILLING - HELLE - CHRISTIANSEN - ROBERTSON Structural & Civil Engineers

PROJECT THE WORLD TRADE CENTER | TITLE FLOOR PANEL DETAIL E54 | DATE 1-3-68

REVISIONS

4-1-68

10-15-68

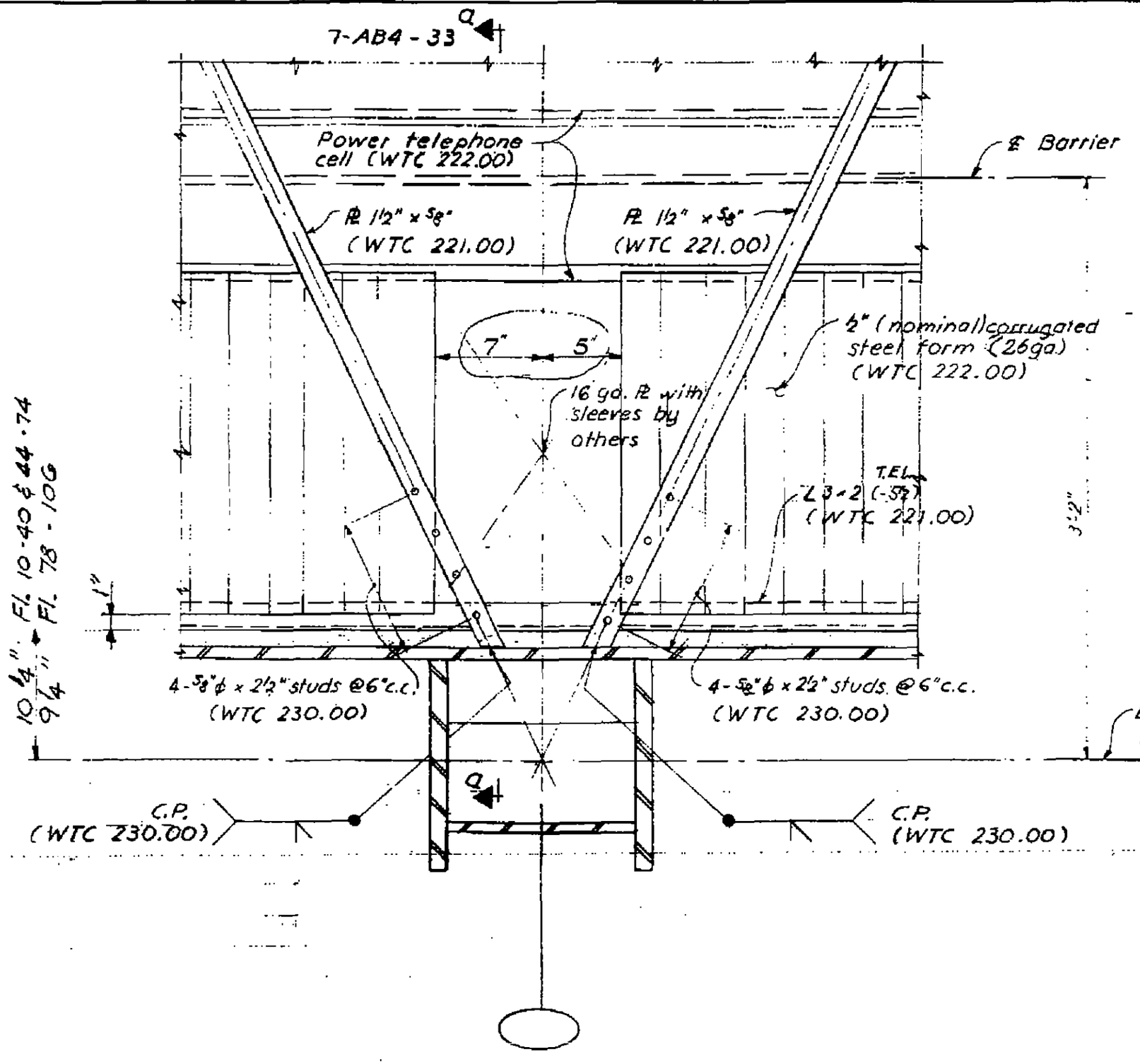

LICENSED PROFESSIONAL ENGINEER LESLIE E. ROBERTSON No. 34360 UNIVERSITY OF THE STATE OF NEW YORK

57

167

7-AB4-34

SKILLING, HELLE, CHRISTIANSEN, ROBERTSON — Structural & Civil Engineers

PROJECT: THE WORLD TRADE CENTER | TITLE: FLOOR PANEL DETAIL E 54 A | DATE: 1-20-69

REVISIONS

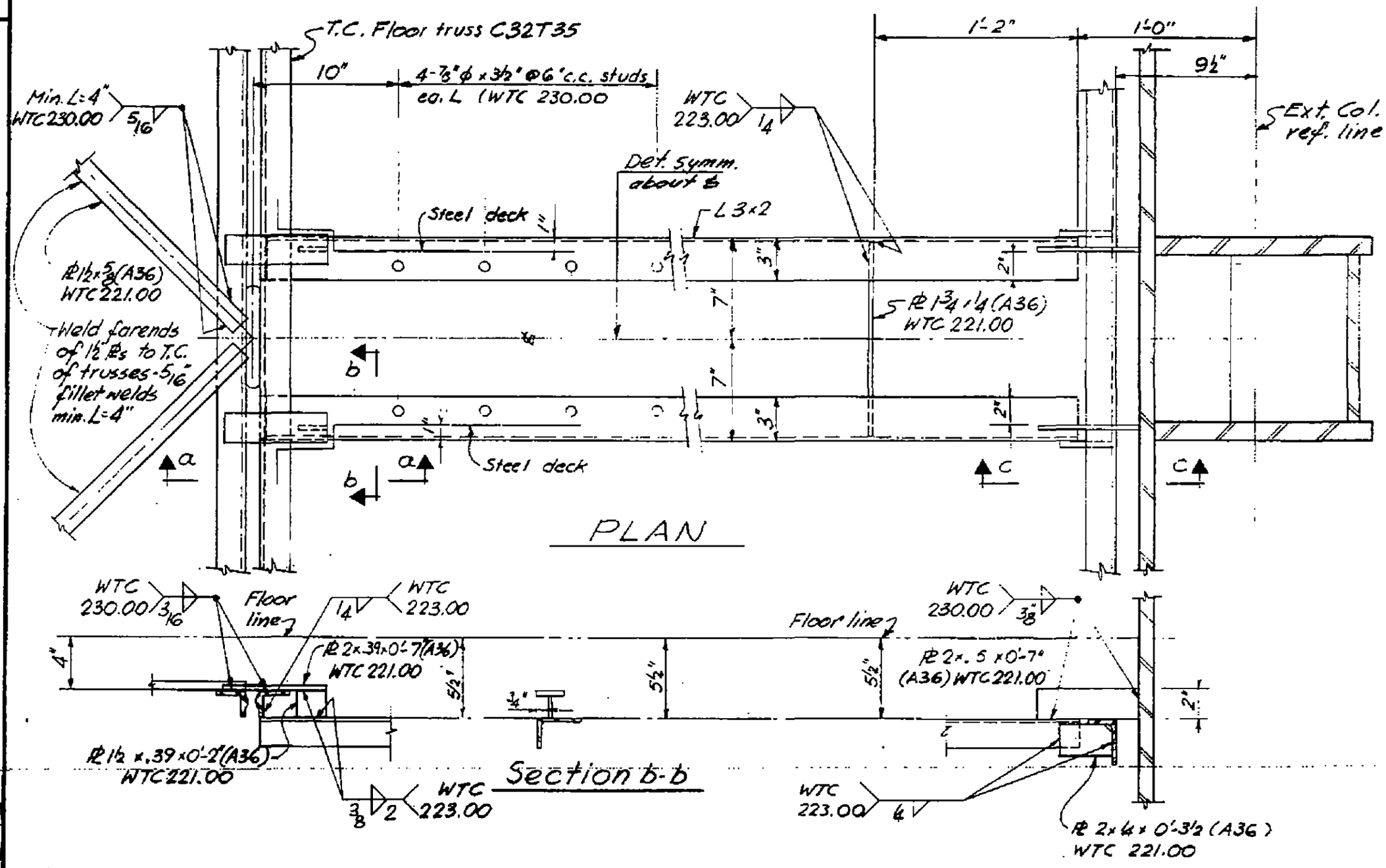

LICENSED PROFESSIONAL ENGINEER — LESLIE E. ROBERTSON — No. 34960 — UNIVERSITY OF THE STATE OF NEW YORK

DESIGNED

DRAWN

REVIEWED

7-AB4-34.1

SKILLING - HELLE - CHRISTIANSEN - ROBERTSON — Structural & Civil Engineers

PROJECT THE WORLD TRADE CENTER | TITLE FLOOR PANEL DETAIL E 55 | DATE 1-3-68

REVISIONS

4-1-68

10-15-68

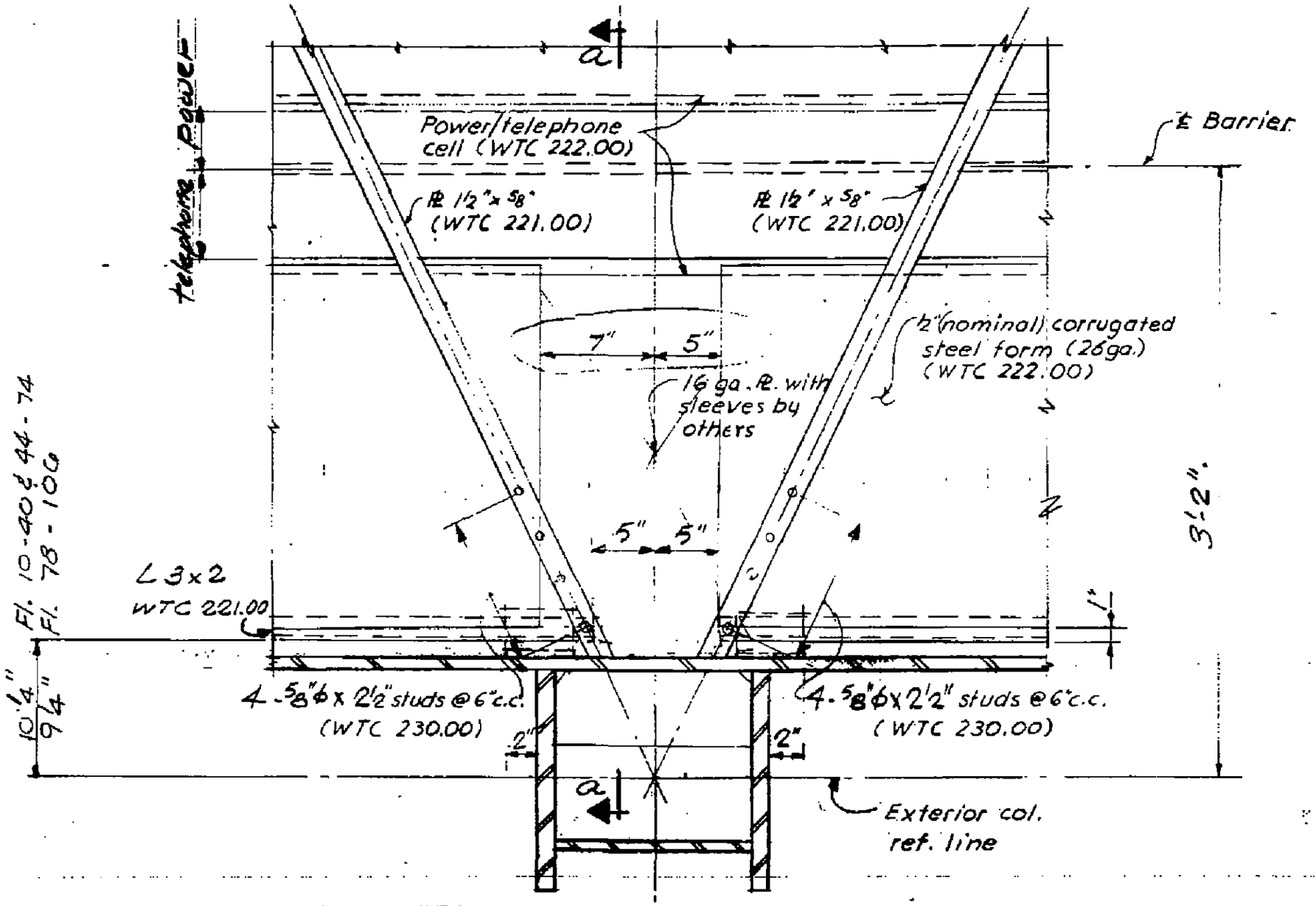

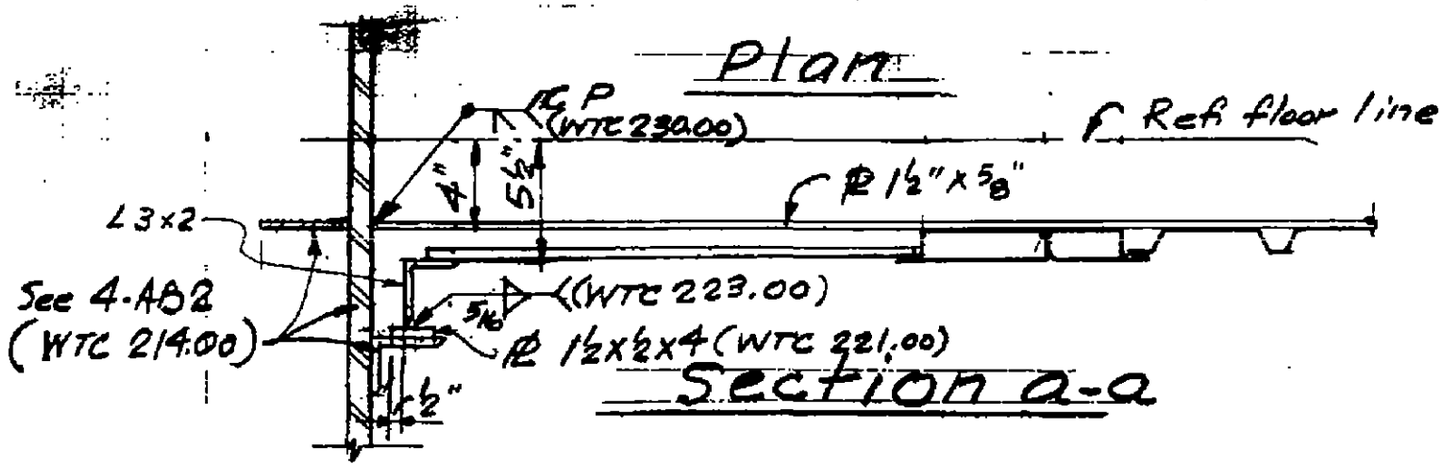

7-AB4-35

SKILLING - HELLE - CHRISTIANSEN - ROBERTSON Structural & Civil Engineers

PROJECT THE WORLD TRADE CENTER | TITLE FLOOR PANEL DETAIL E56 | DATE 1-3-68

REVISIONS

4-1-68
7-22-68
10-15-68

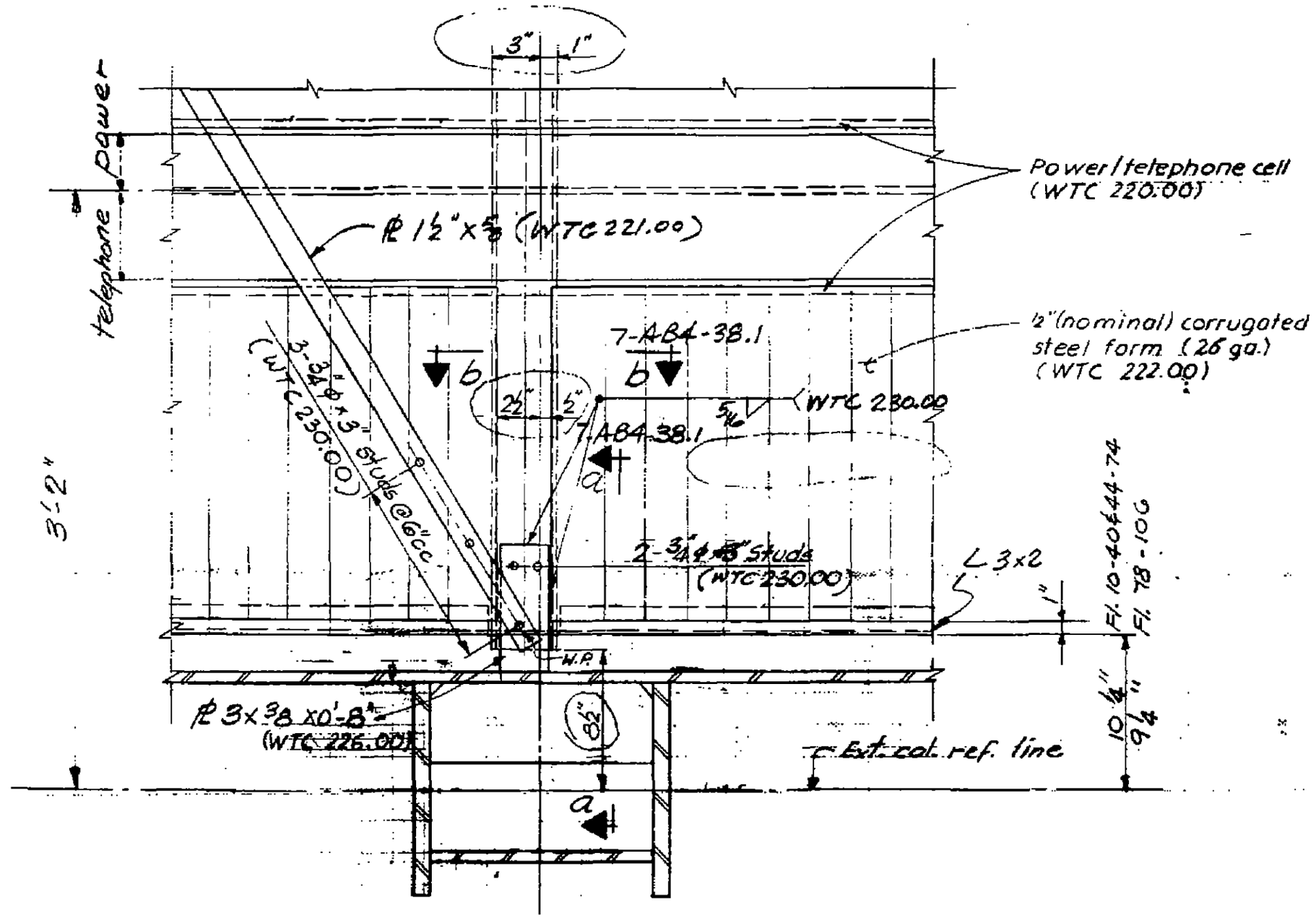

LICENSED PROFESSIONAL ENGINEER LESLIE E. ROBERTSON No. 34960 REGISTERED BY THE STATE OF NEW YORK

81

7-AB4-36

SKILLING - HELLE - CHRISTIANSEN - ROBERTSON — Structural & Civil Engineers

PROJECT THE WORLD TRADE CENTER | TITLE FLOOR PANEL DETAIL [illegible] | DATE 1-3-68

REVISIONS

1. 4-1-68
7-22-68
10-15-68

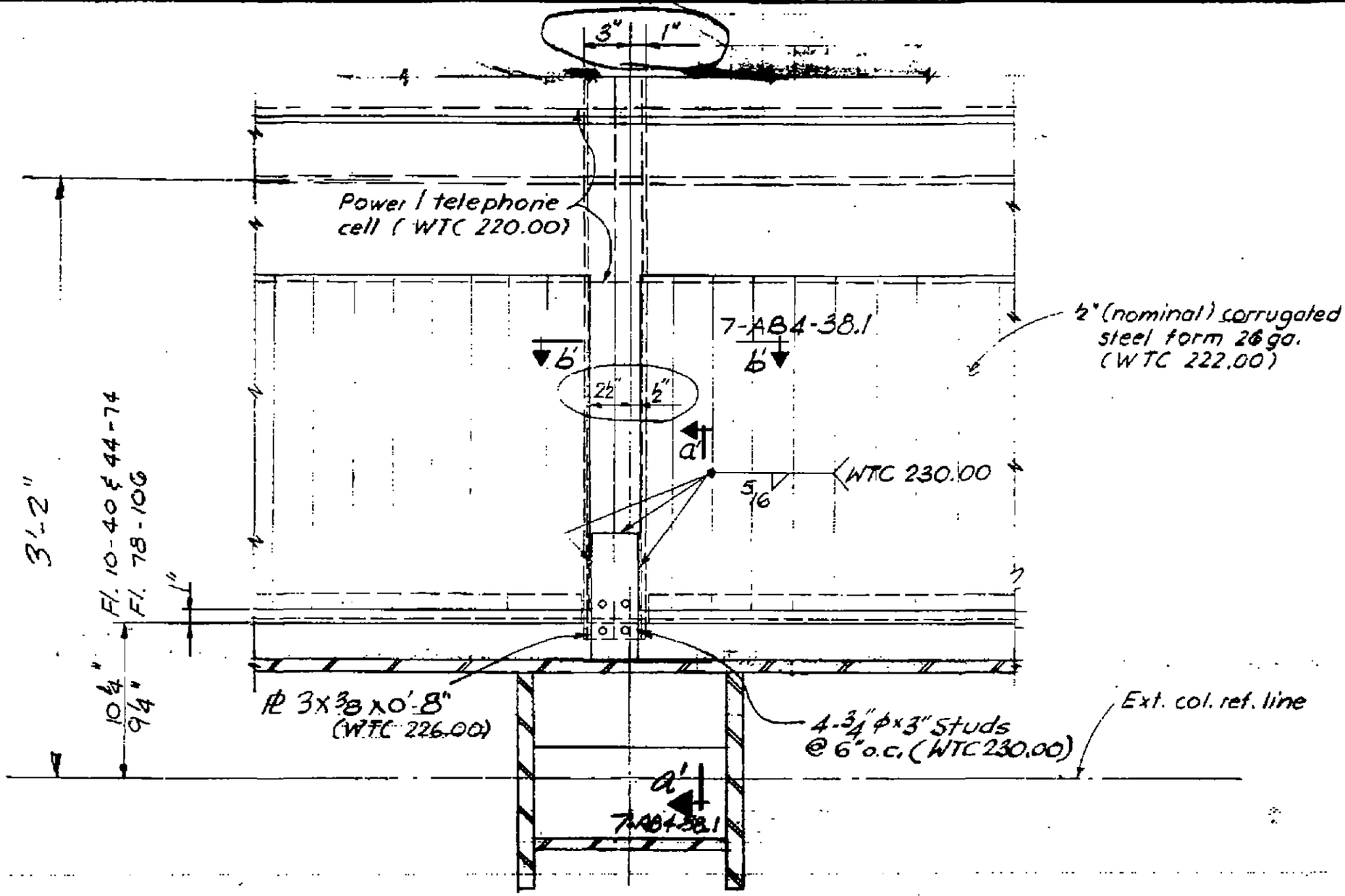

LICENSED PROFESSIONAL ENGINEER LESLIE E. ROBERTSON No. 34360 STATE OF NEW YORK

82

7-AB4-37

SKILLING - HELLE - CHRISTIANSEN - ROBERTSON Structural & Civil Engineers

PROJECT THE WORLD TRADE CENTER | TITLE FLOOR PANEL DETAIL E58, E59, E60 | DATE 1-3-68

REVISIONS

4-1-68
7-22-68
10-15-68

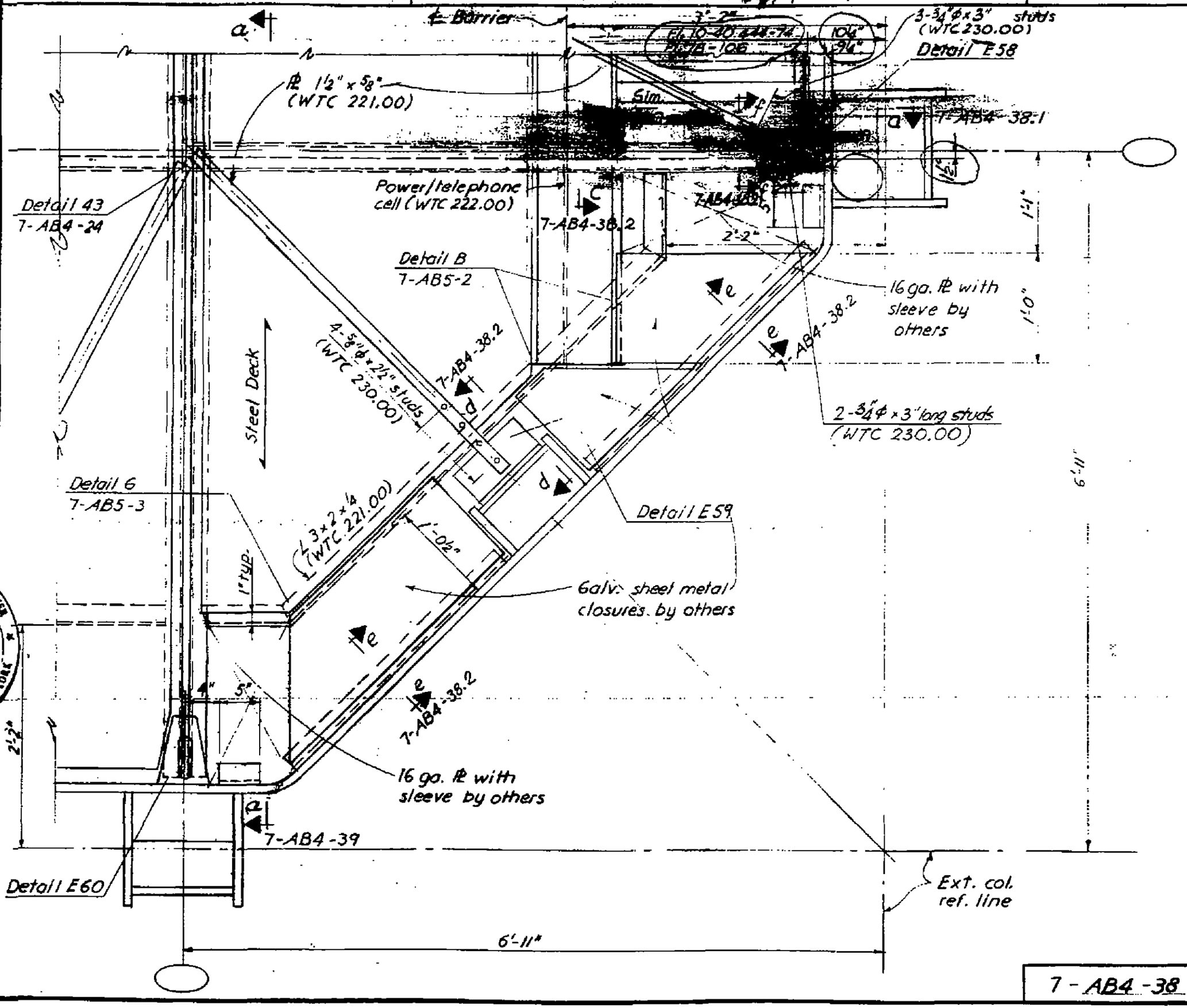

LESLIE E. ROBERTSON LICENSED PROFESSIONAL ENGINEER NO. 34360 STATE OF NEW YORK

83

7 - AB4 - 38

SKILLING - HELLE - CHRISTIANSEN - ROBERTSON Structural & Civil Engineers

PROJECT THE WORLD TRADE CENTER | TITLE FLOOR PANEL DETAIL E58, E57, E56 | DATE 1-3-68

REVISIONS

4-1-68

7-22-68
10-15-68

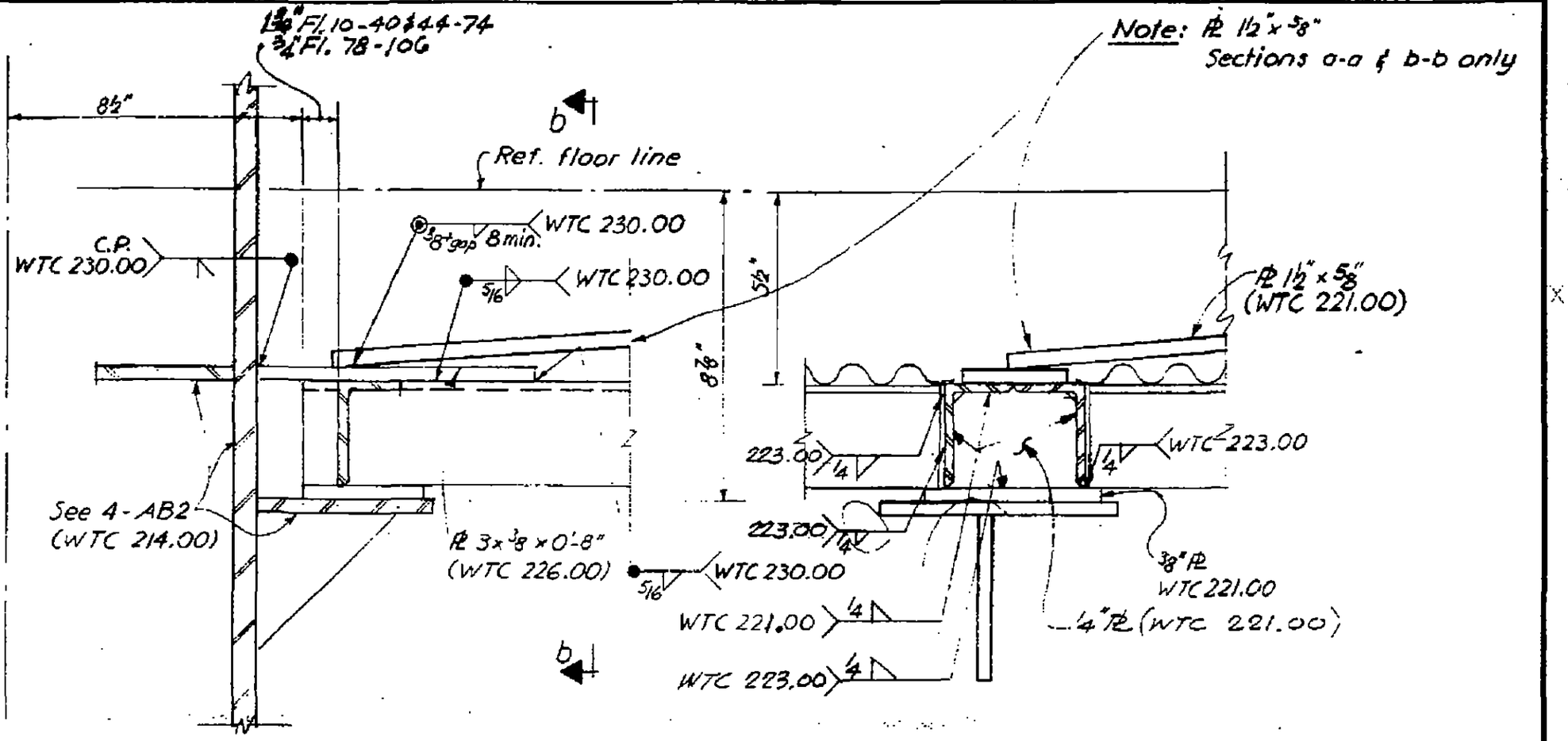

Section a-a
Section a'-a' (as noted)

Section b-b
Section b'-b' (as noted)

7-AB4-38.1

SKILLING - HELLE - CHRISTIANSEN - ROBERTSON Structural & Civil Engineers

PROJECT THE WORLD TRADE CENTER | TITLE FLOOR PANEL DETAIL E 58, E 59 | DATE 4-1-68

REVISIONS

7-22-68
10-15-68

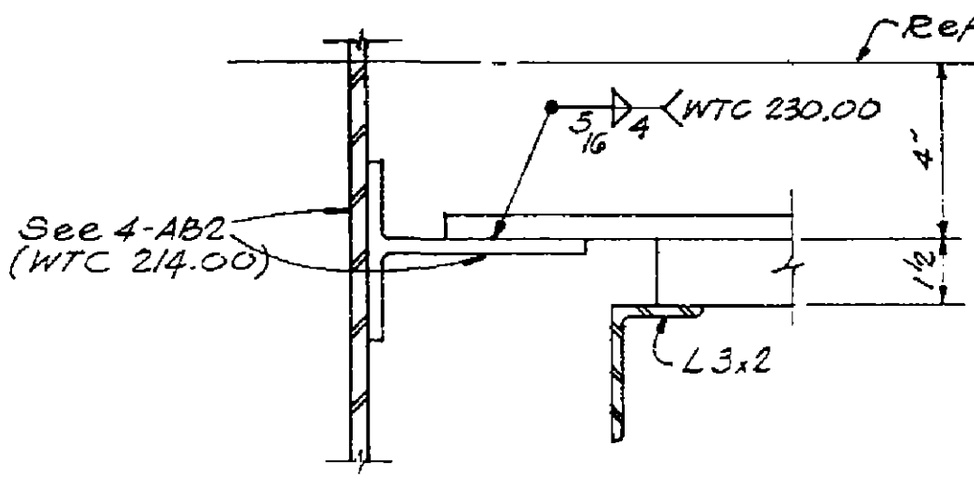

Section d-d

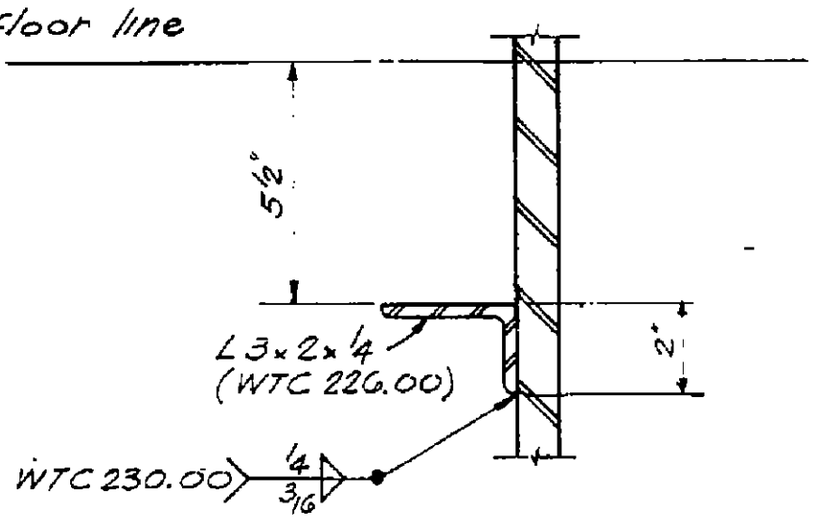

Section e-e

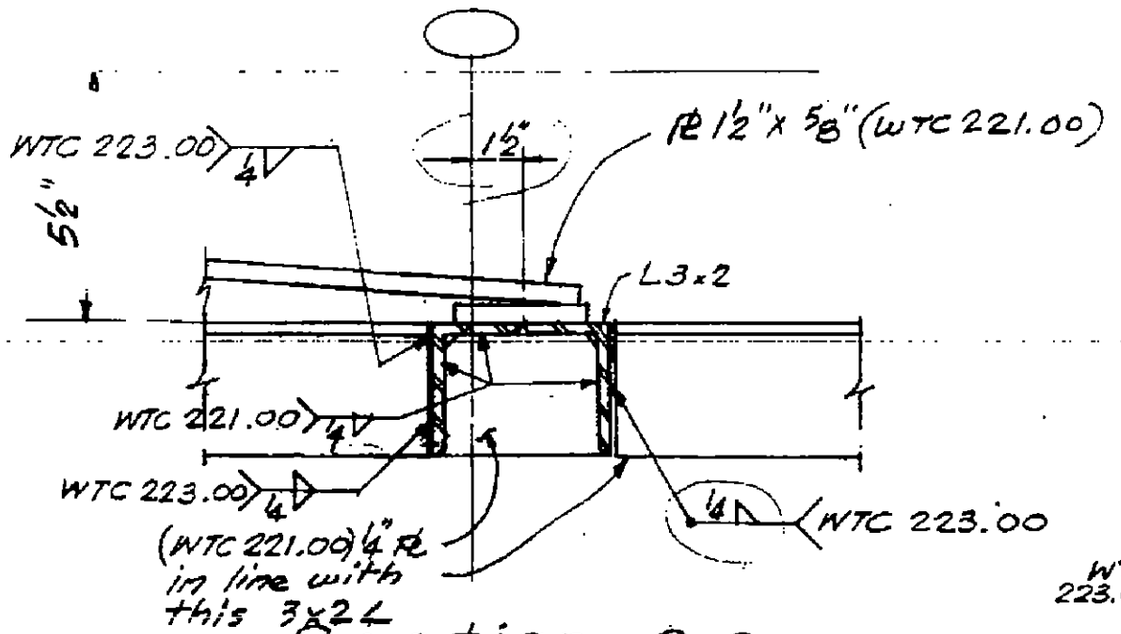

Section C-C

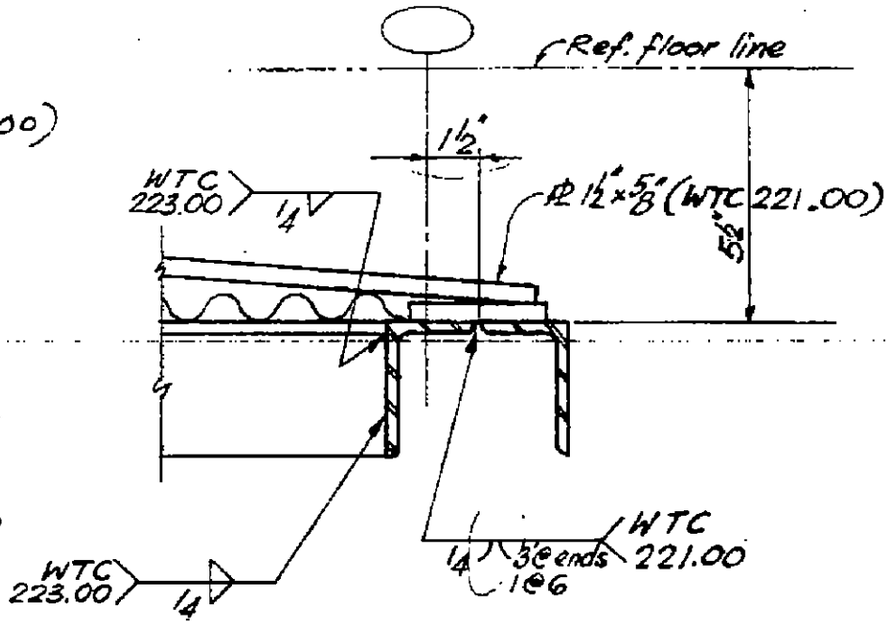

Section f-f

LICENSED PROFESSIONAL ENGINEER
LESLIE E. ROBERTSON
No. 34960
REGISTERED TO THE STATE OF NEW YORK

85

7-AB4-3[illegible]

SKILLING, HELLE, CHRISTIANSEN, ROBERTSON — Structural & Civil Engineers

PROJECT: THE WORLD TRADE CENTER | TITLE: FLOOR PANEL DETAIL E59A | DATE: 1-20-69

REVISIONS

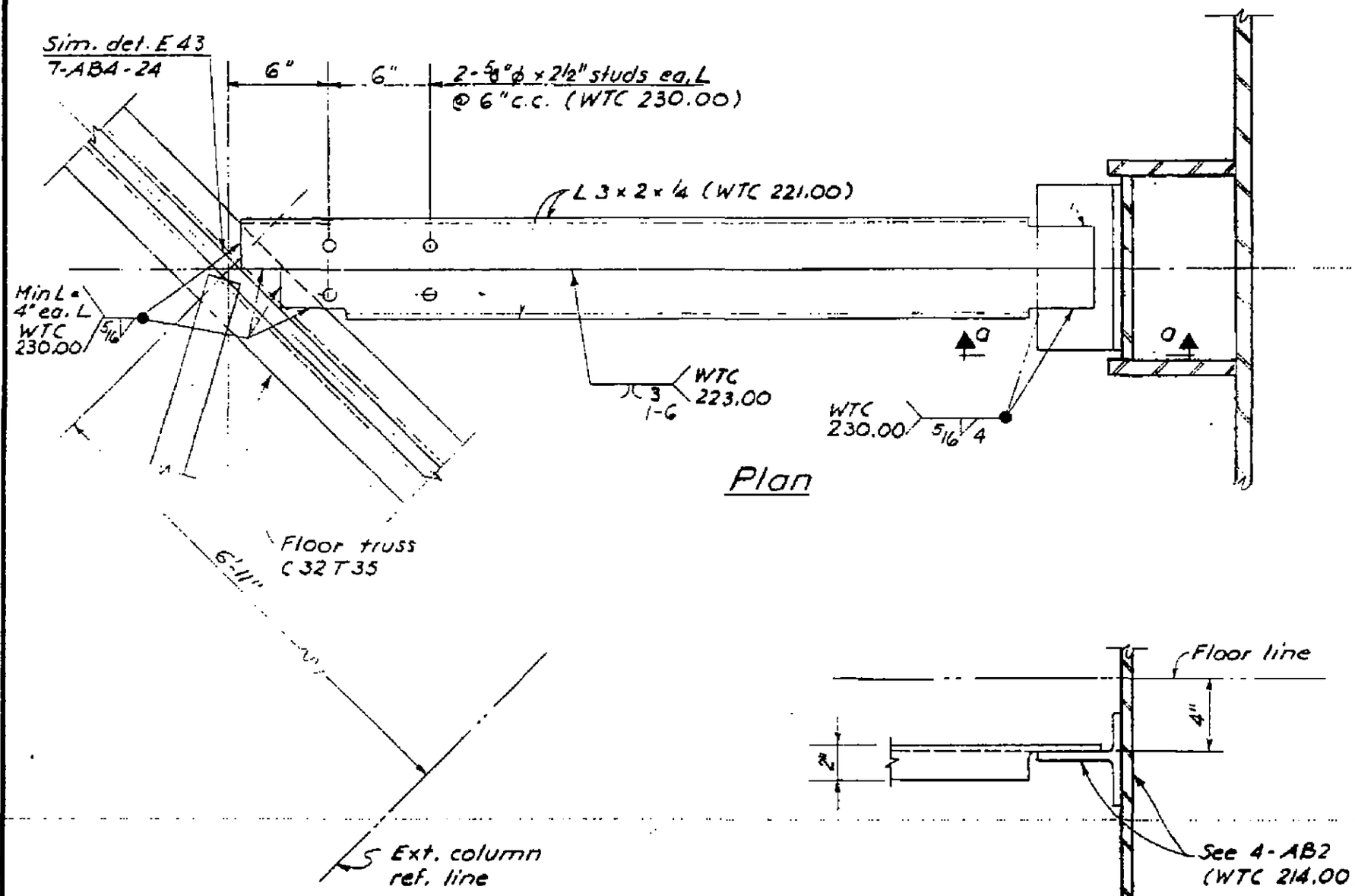

Plan

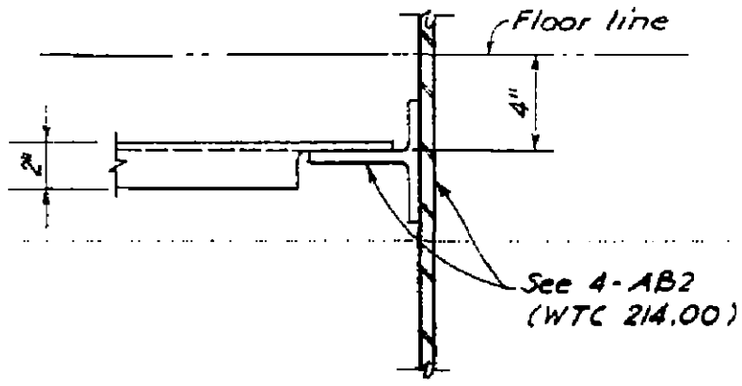

Section a-a

LICENSED PROFESSIONAL ENGINEER
LESLIE E. ROBERTSON
No. 34960
UNIVERSITY OF THE STATE OF NEW YORK

DESIGNED

DRAWN

REVIEWED

7-AB4-38.3

SKILLING - HELLE - CHRISTIANSEN - ROBERTSON Structural & Civil Engineers

PROJECT THE WORLD TRADE CENTER | TITLE FLOOR PANEL - DETAIL E-60 | DATE 1-3-68

REVISIONS

7-22-68

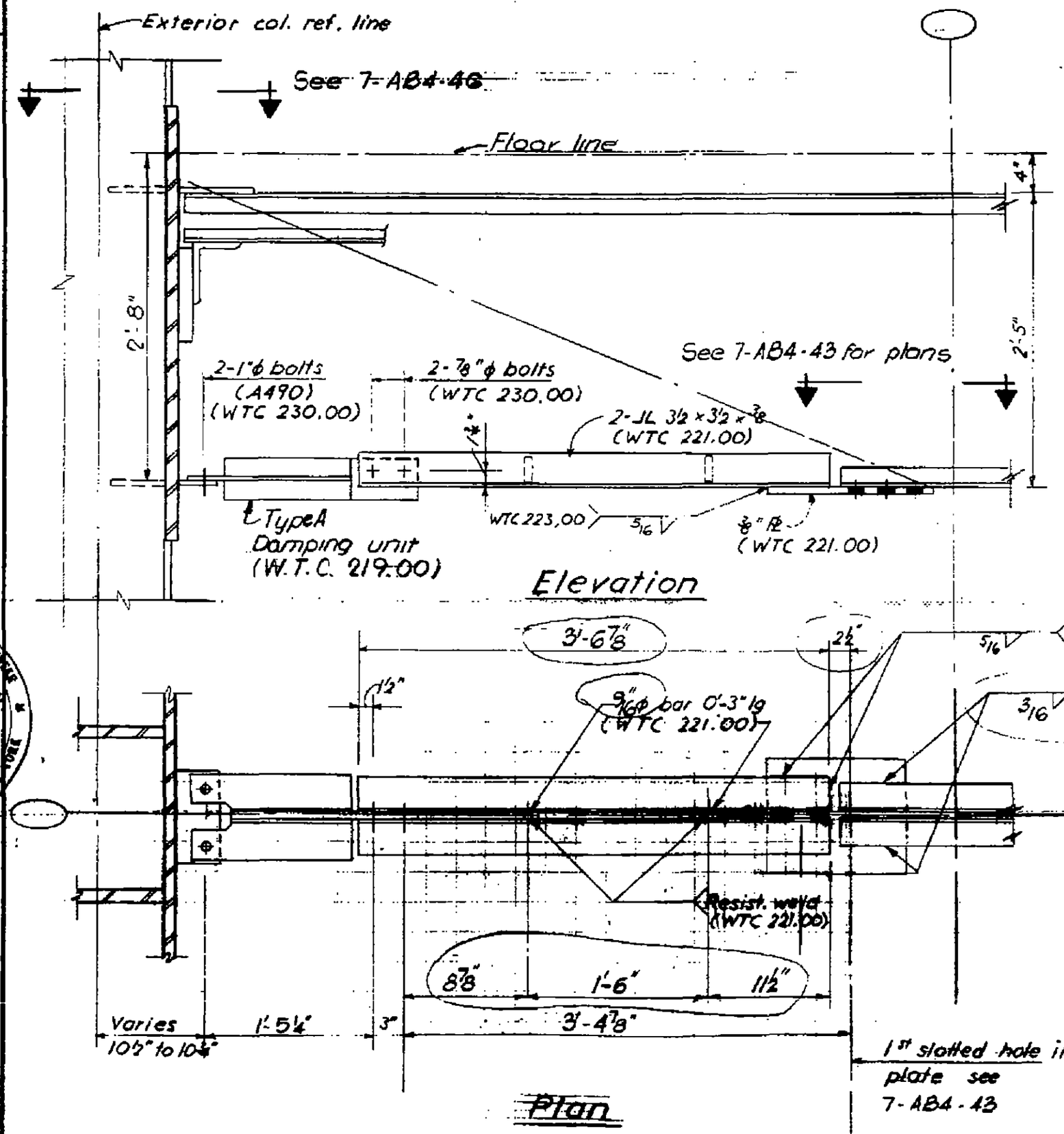

LICENSED PROFESSIONAL ENGINEER
LESLIE E. ROBERTSON
No. 34360
UNIVERSITY OF THE STATE OF NEW YORK

86

7-AB4-39

SKILLING - HELLE - CHRISTIANSEN - ROBERTSON Structural & Civil Engineers

PROJECT THE WORLD TRADE CENTER | TITLE FLOOR PANEL - DETAIL EG1 TO E67 | DATE 10-10-67

REVISIONS

1-3-68
7-22-68

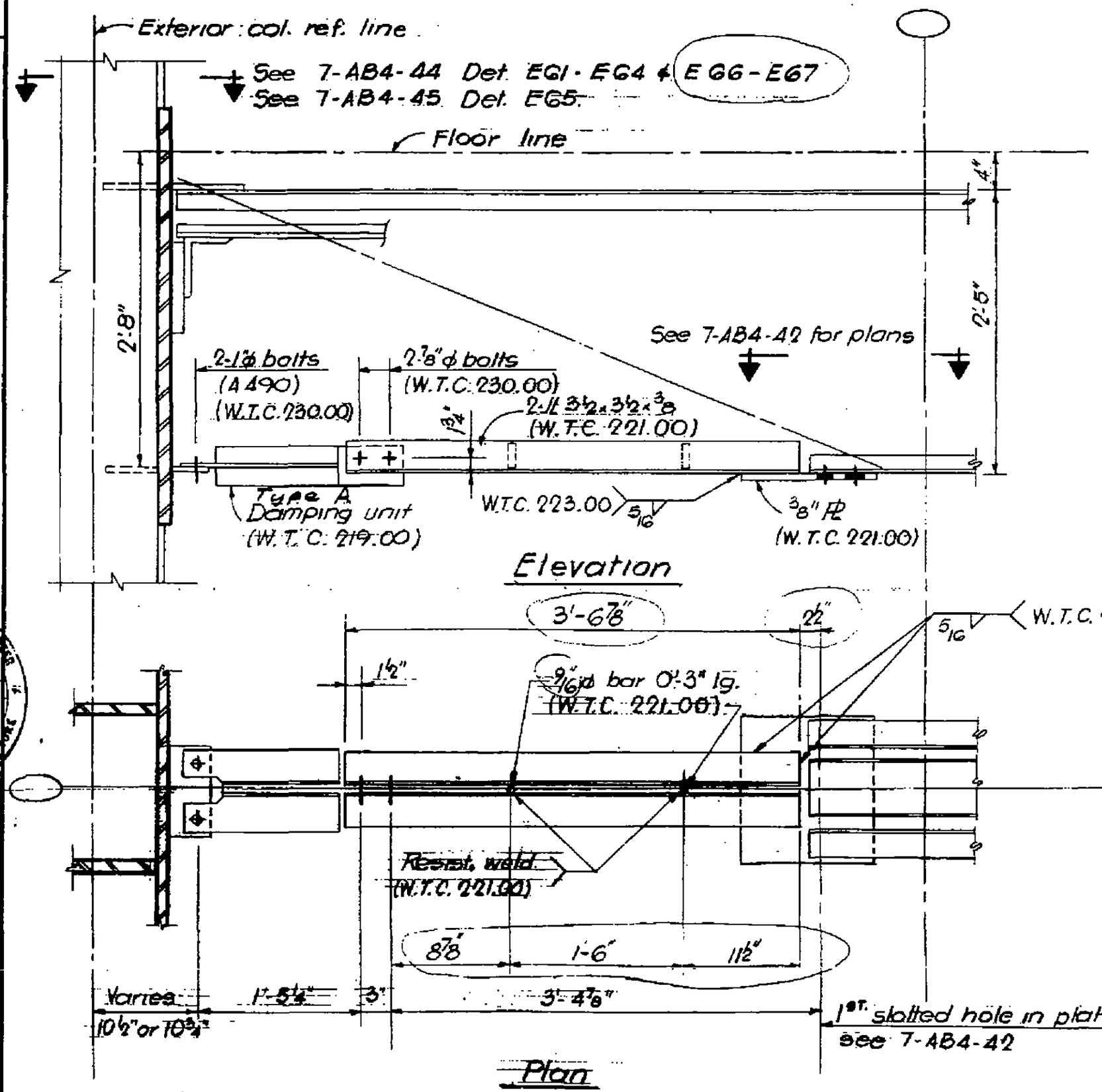

LICENSED PROFESSIONAL ENGINEER LESLIE E. ROBERTSON No. 34360 UNIVERSITY OF THE STATE OF NEW YORK

87

7-AB4-40

SKILLING - HELLE - CHRISTIANSEN - ROBERTSON Structural & Civil Engineers

PROJECT THE WORLD TRADE CENTER | TITLE FLOOR PANEL - DETAIL E68A | DATE 10-20-67

REVISIONS

1-3-68
7-22-68

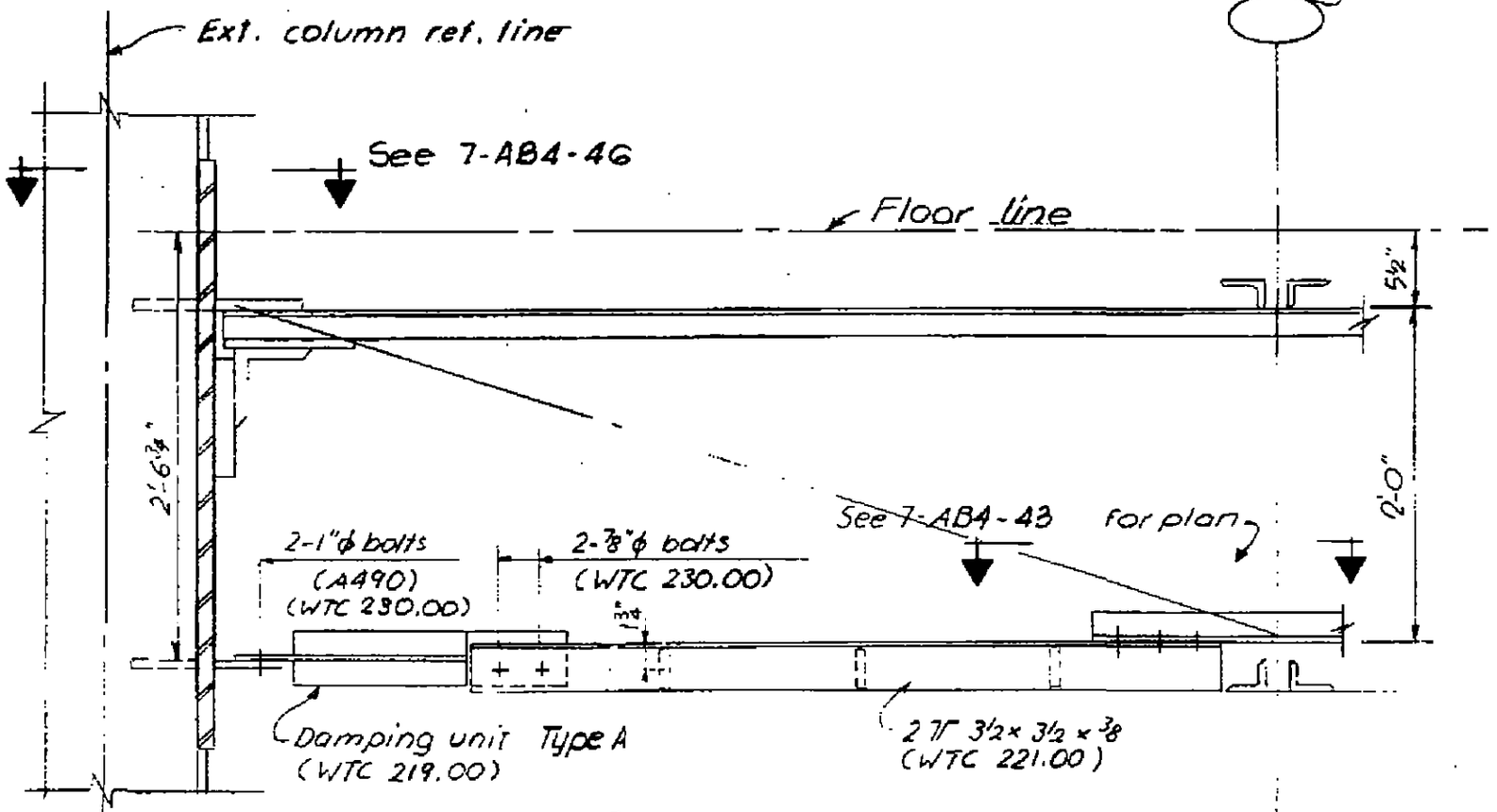

Elevation

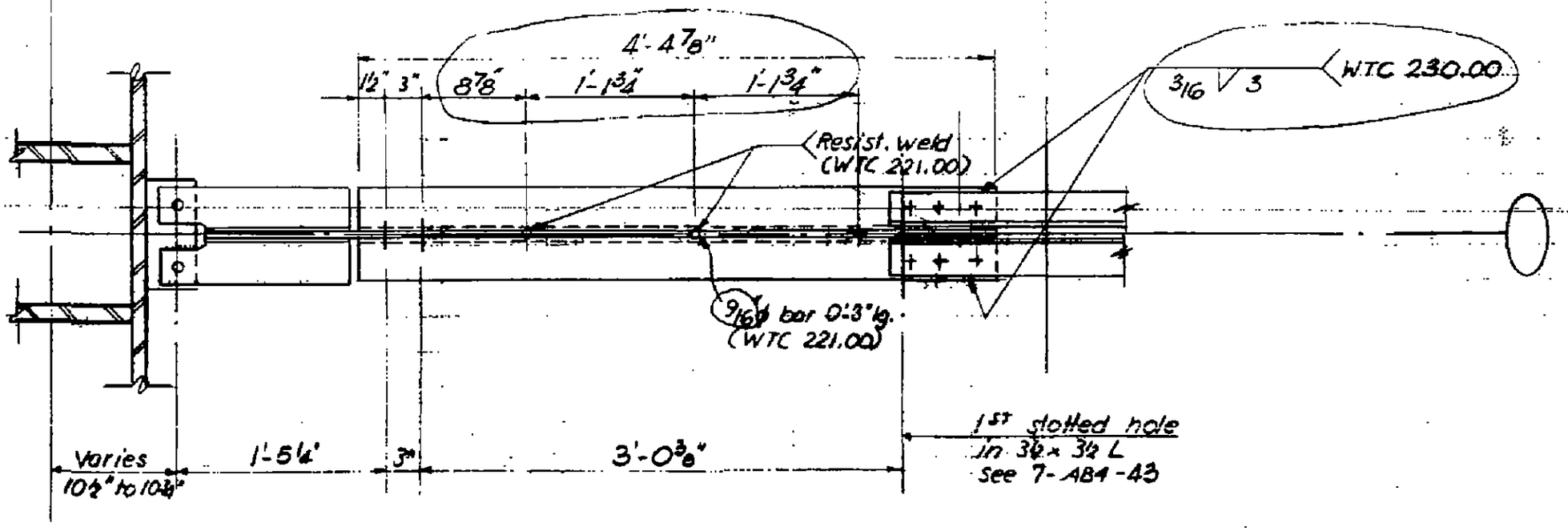

Plan

ROBERTSON No. 34960 REGISTERED ARCHITECT OF THE STATE OF NEW YORK

7-AB4-41

68

SKILLING, HELLE, CHRISTIANSEN, ROBERTSON — Structural & Civil Engineers

PROJECT THE WORLD TRADE CENTER | TITLE FLOOR PANEL - DETAIL E68 | DATE 7-22-68

REVISIONS

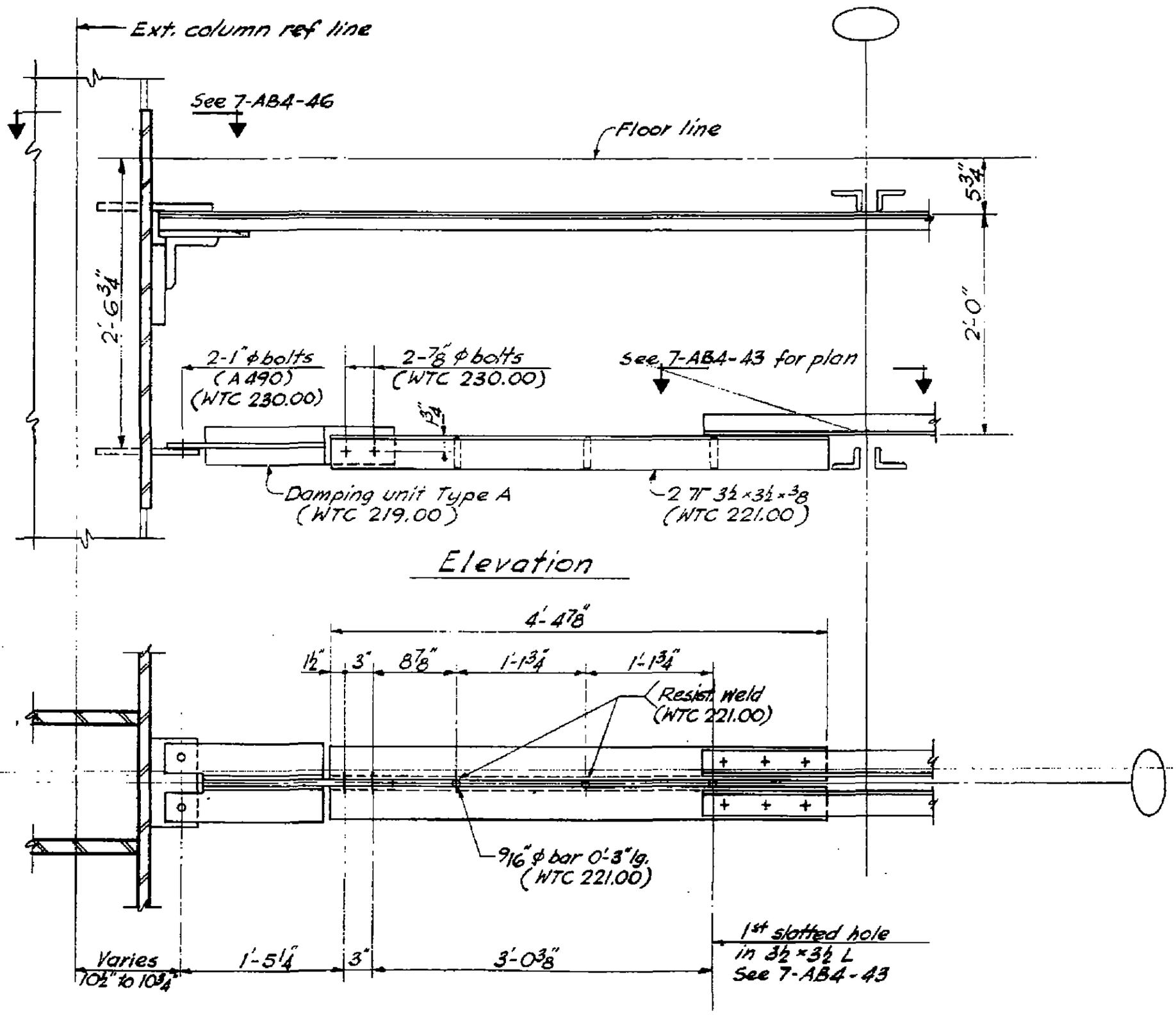

LESLIE E. ROBERTSON — LICENSED PROFESSIONAL ENGINEER — No. 31060 — STATE OF NEW YORK

DESIGNED

DRAWN

REVIEWED

89

7-AB4-41.1

SKILLING - HELLE - CHRISTIANSEN - ROBERTSON Structural & Civil Engineers

PROJECT THE WORLD TRADE CENTER | TITLE DAMPER CONNECTION DETAIL EG1 TO EG7 | DATE 10-20-67

REVISIONS

1-3-68
4-1-68
7-22-68
10-15-68

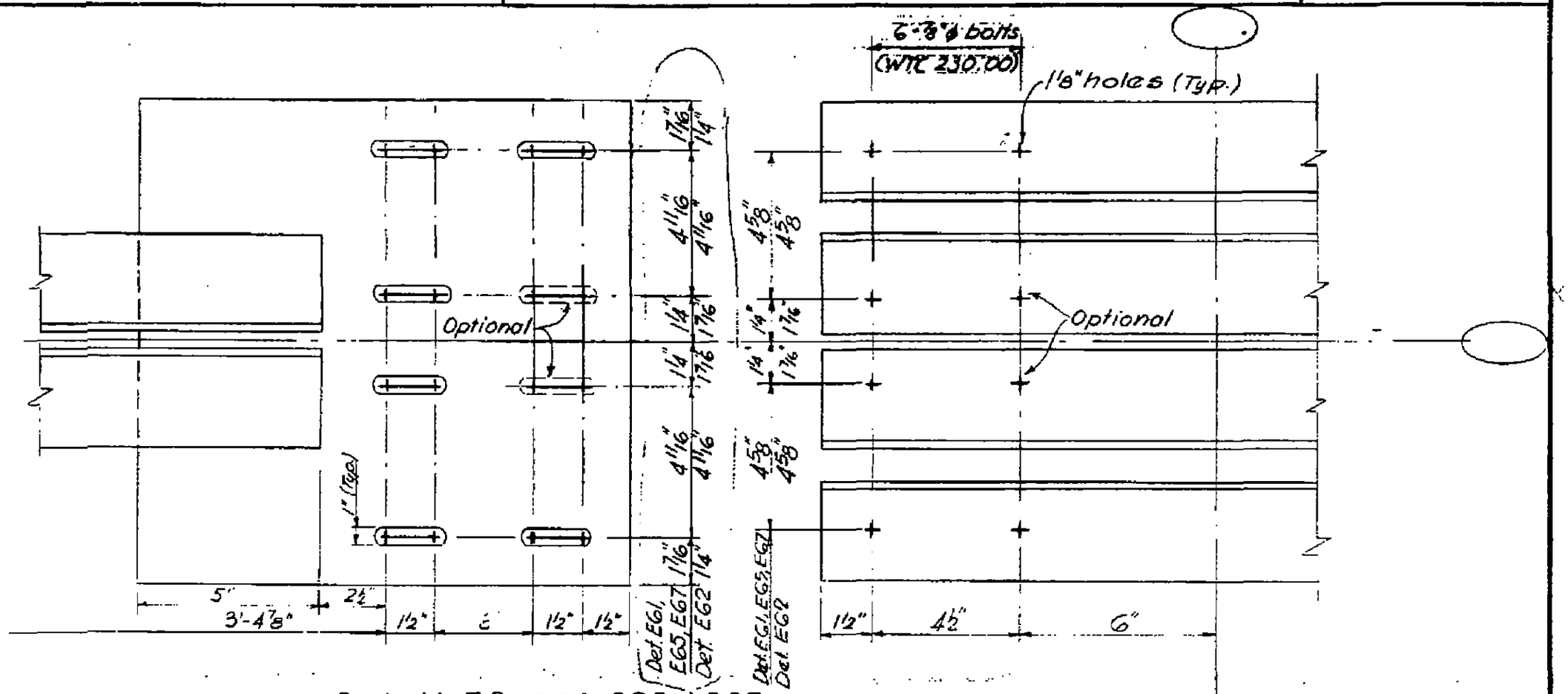

Detail EG1, EG2, EG5, & EG7
JL 3x2 Bottom chord

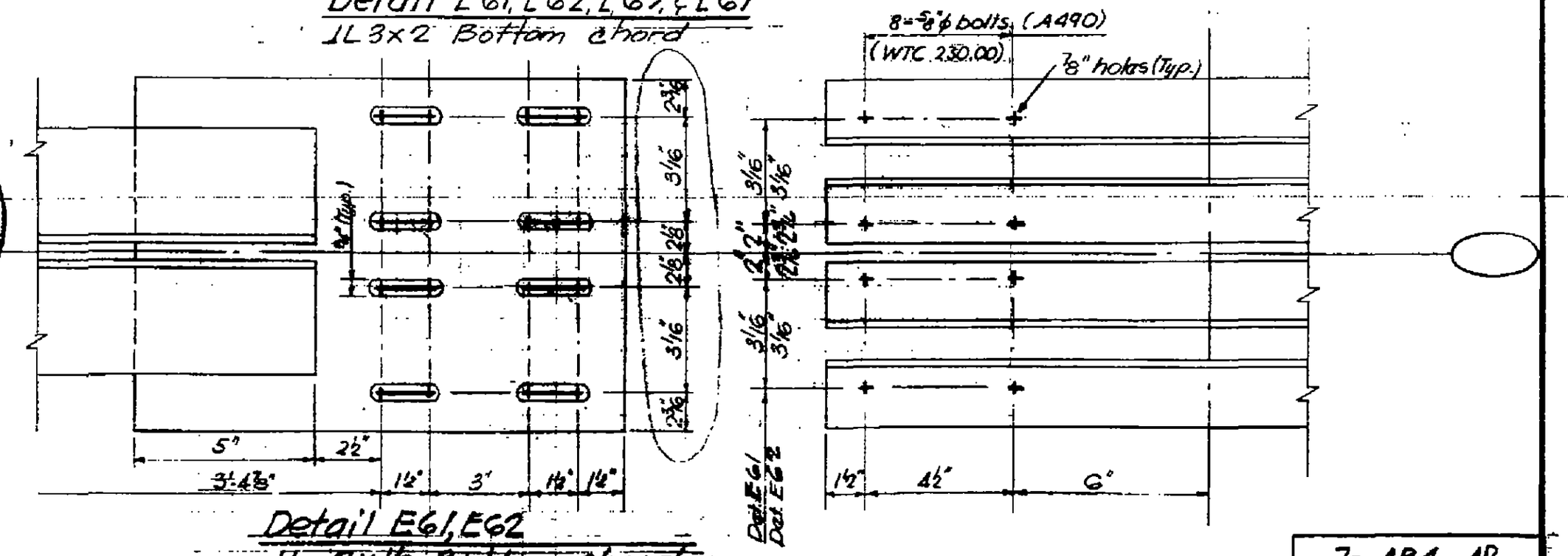

Detail EG1, EG2
JL 2x1½ Bottom chord

LICENSED PROFESSIONAL ENGINEER
LESLIE E. ROBERTSON
No. 34360
LICENSED TO PRACTICE IN THE STATE OF NEW YORK

90

7-AB4-42

SKILLING - HELLE - CHRISTIANSEN - ROBERTSON Structural & Civil Engineers

PROJECT THE WORLD TRADE CENTER | TITLE DAMPER CONNECTION DETAIL E61 TO E67 | DATE 10-20-67

REVISIONS

1-3-68
4-1-68
7-22-68
10-15-68

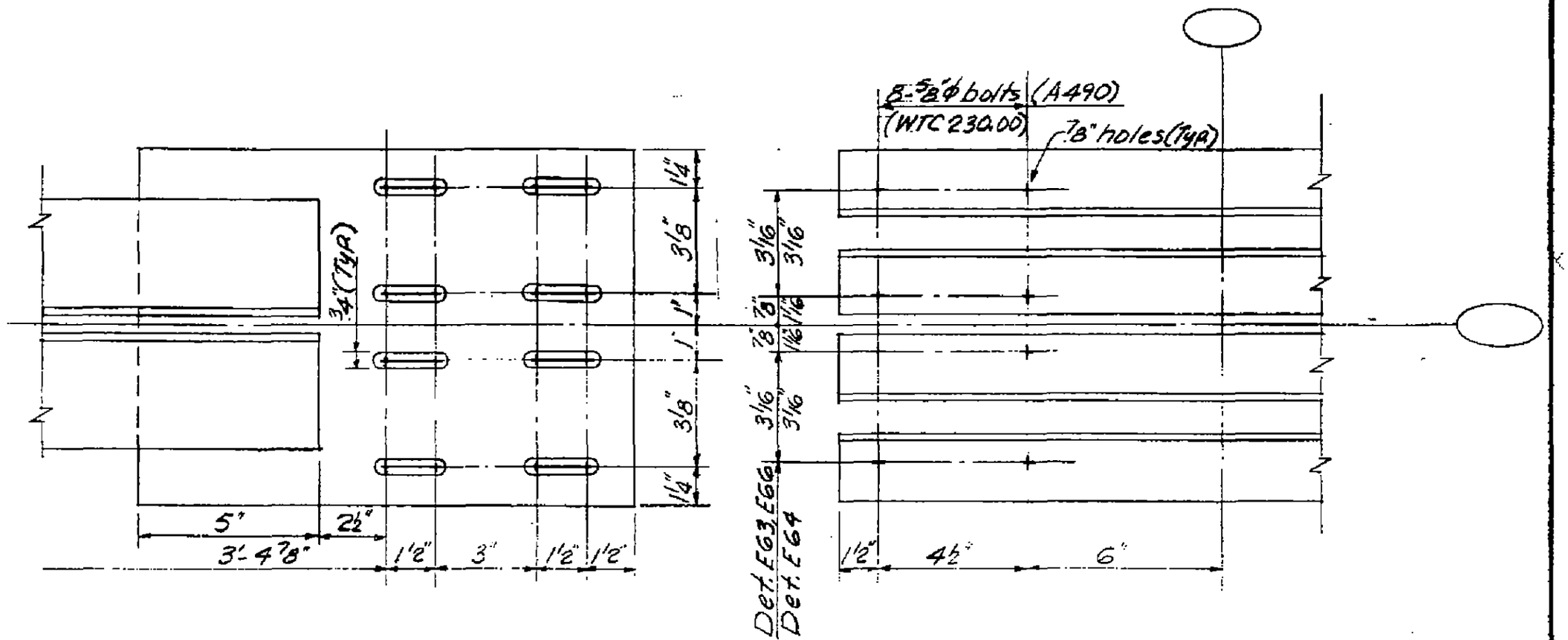

Detail E63, E64 & E66

LICENSED PROFESSIONAL ENGINEER
LESLIE E. ROBERTSON
No. 34360
UNIVERSITY OF THE STATE OF NEW YORK

7-AB4-42.1

SKILLING - HELLE - CHRISTIANSEN - ROBERTSON Structural & Civil Engineers

PROJECT THE WORLD TRADE CENTER | TITLE DAMPER CONNECTION DETAIL E60, E68 & E68A | DATE 10-20-67

REVISIONS

1-3-68
7-22-68

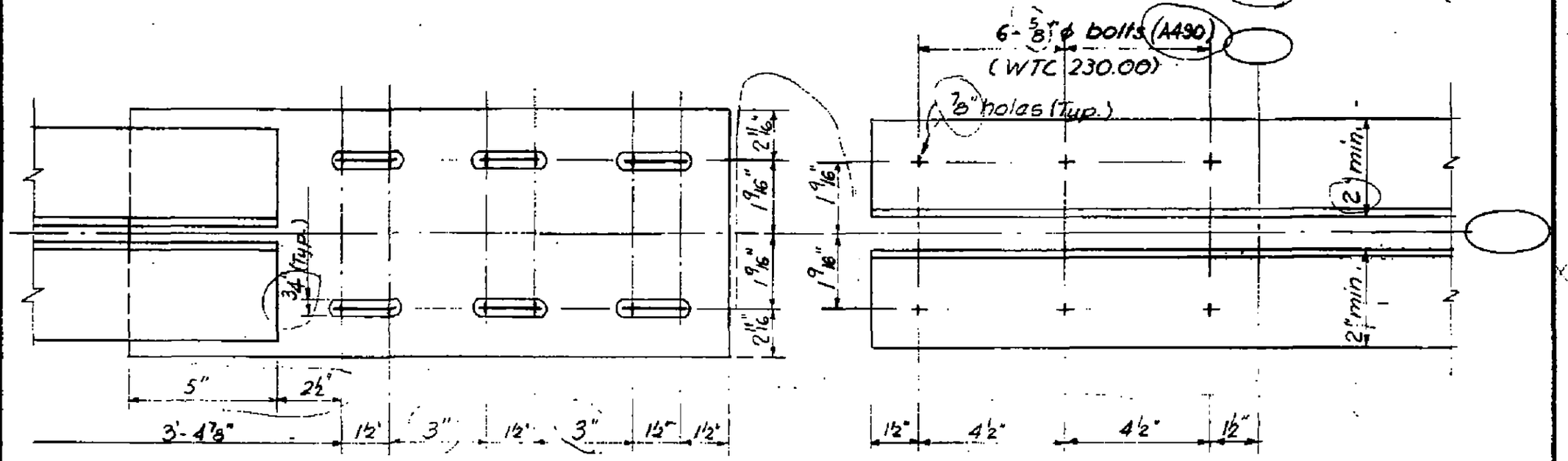

Detail E 60

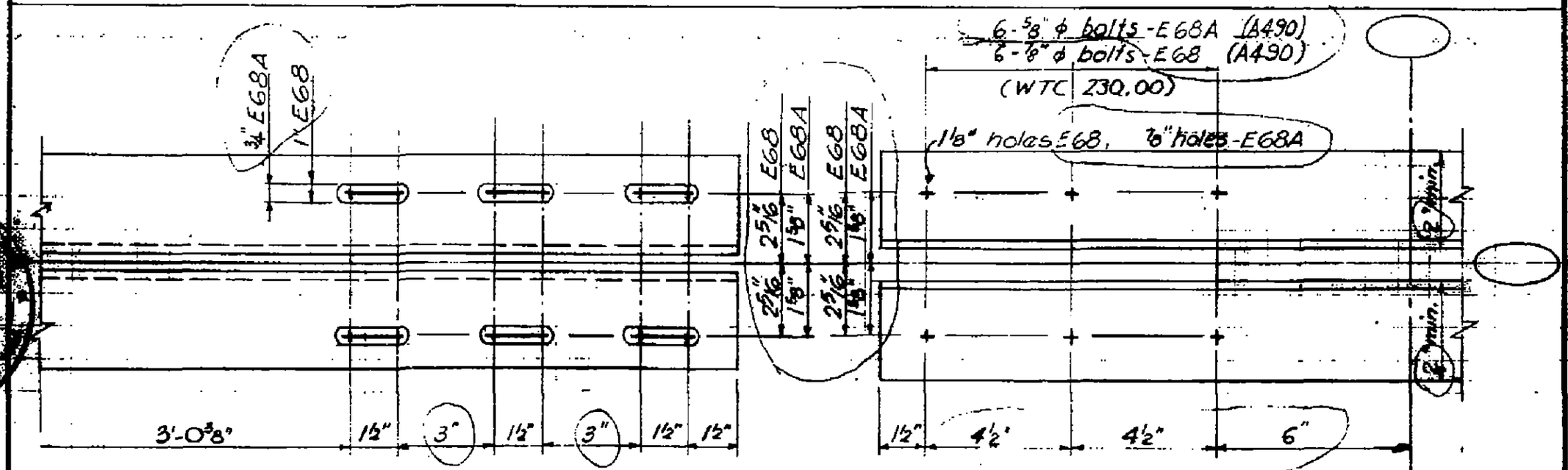

Detail E 68 & E 68A

7-AB4-43

SKILLING - HELLE - CHRISTIANSEN - ROBERTSON — Structural & Civil Engineers

PROJECT THE WORLD TRADE CENTER | TITLE DETAIL EG1, EG2, EG3, EG4, EG6 & EG7 | DATE 10-20-67

REVISIONS

1-3-68

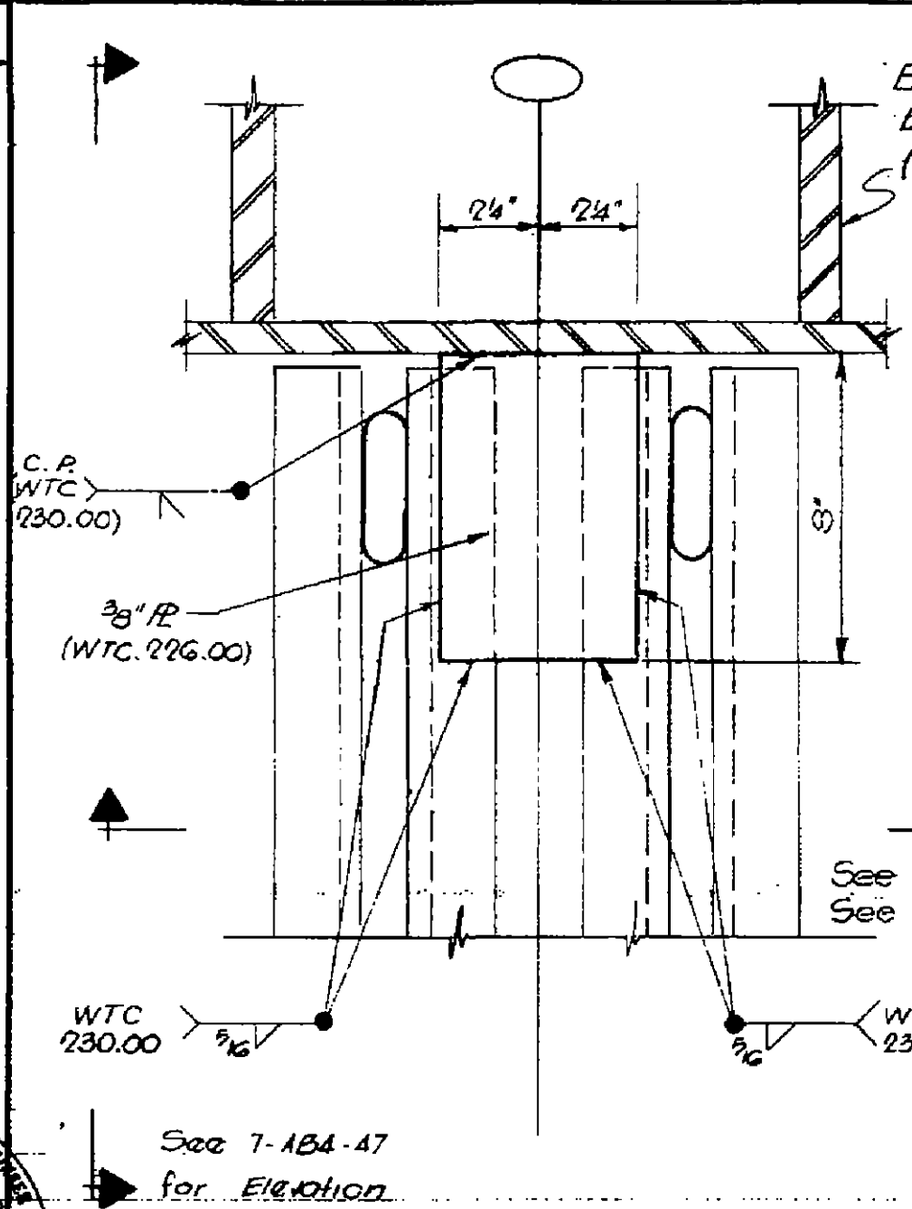

Detail EG1, EG2 & EG7

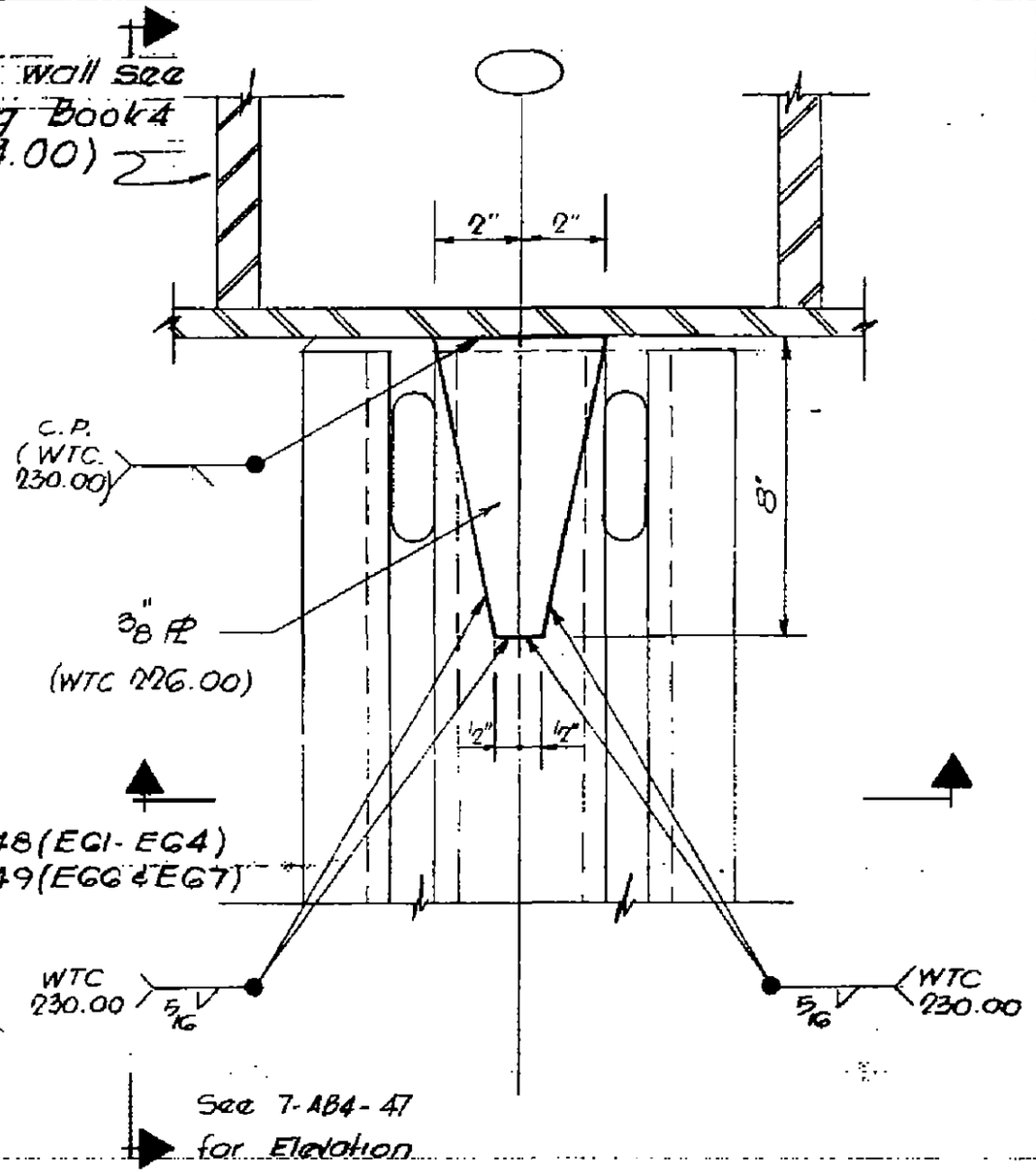

Detail EG3, EG4 & EG6

LICENSED PROFESSIONAL ENGINEER LESLIE E. ROBERTSON No. 24360 UNIVERSITY OF THE STATE OF NEW YORK

SKILLING - HELLE - CHRISTIANSEN - ROBERTSON Structural & Civil Engineers

PROJECT THE WORLD TRADE CENTER | TITLE ~~FLOOR PANEL DETAIL EGS~~ | DATE ~~1-3-68~~

REVISIONS

4-1-68
7-22-68
10-15-68
12-20-68

Exterior wall see Drawing Book 4 (W.T.C. 214.00)

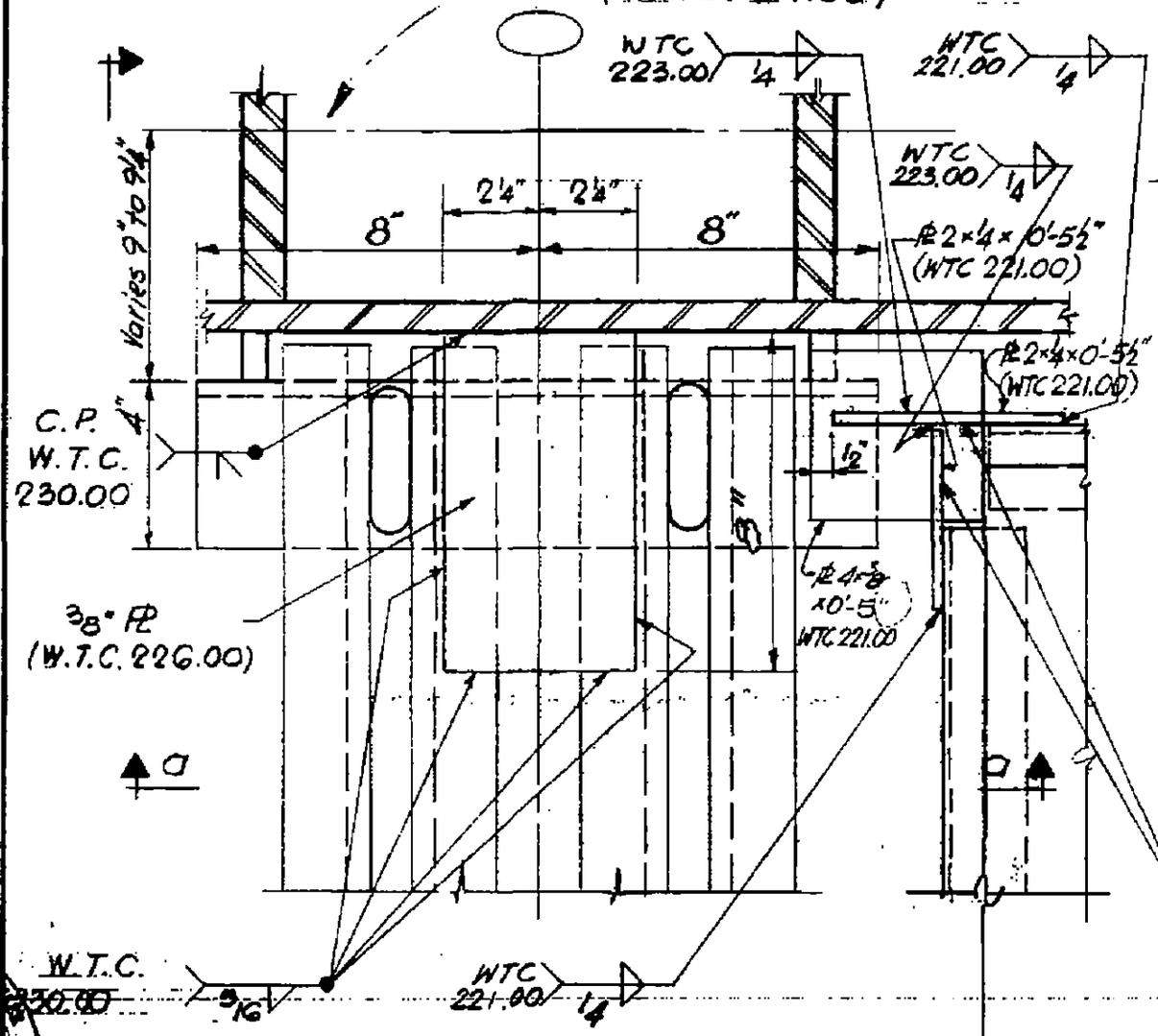

See 7-AB4-47 for Elevation

Plan

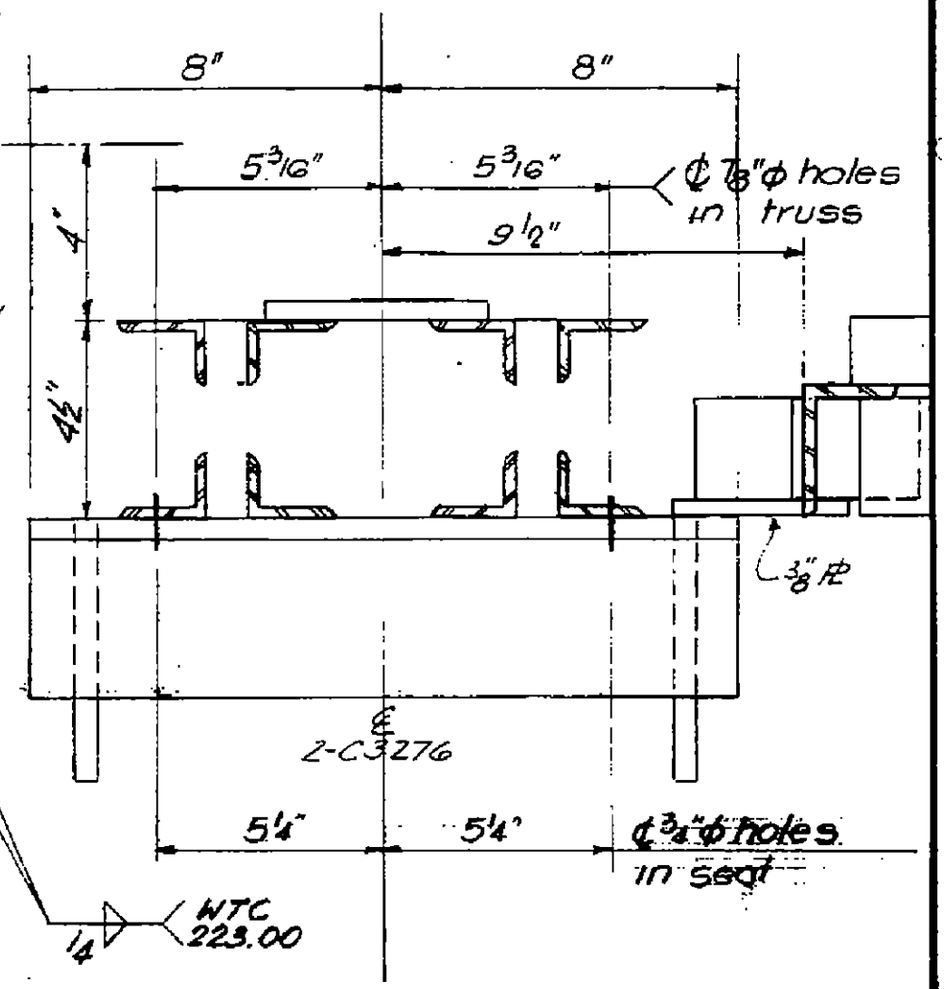

Edge of deck
See floor panel drwgs.

Section a-a

LICENSED PROFESSIONAL ENGINEER LESLIE E. ROBERTSON No. 34360 STATE OF NEW YORK UNIVERSITY OF THE STATE OF NEW YORK

7-AB4-45

SKILLING, HELLE, CHRISTIANSEN, ROBERTSON — Structural & Civil Engineers

PROJECT: THE WORLD TRADE CENTER | TITLE: FLOOR PANEL - DETAIL E 65A | DATE: 11-25-68

REVISIONS

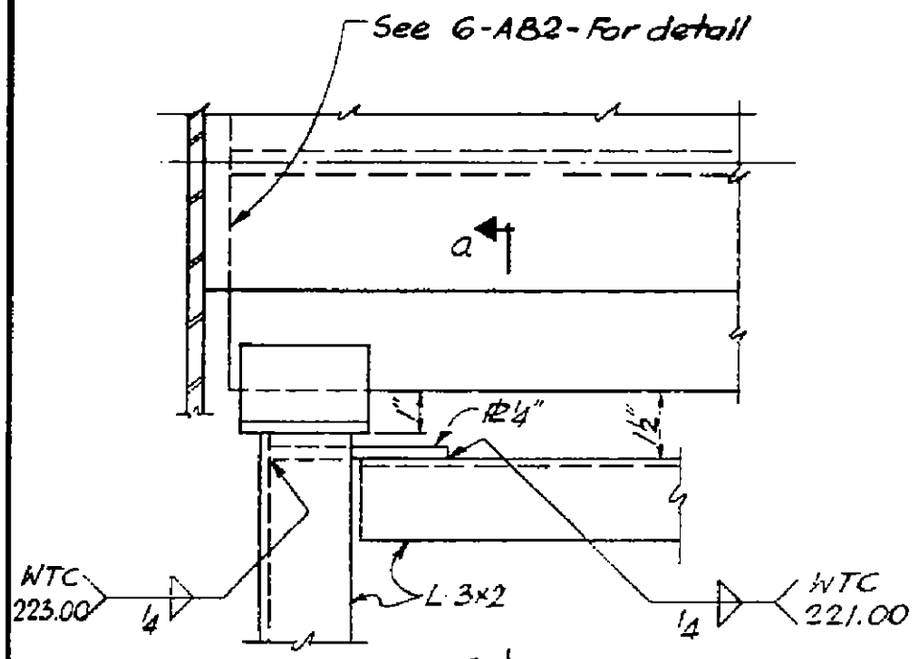

PLAN

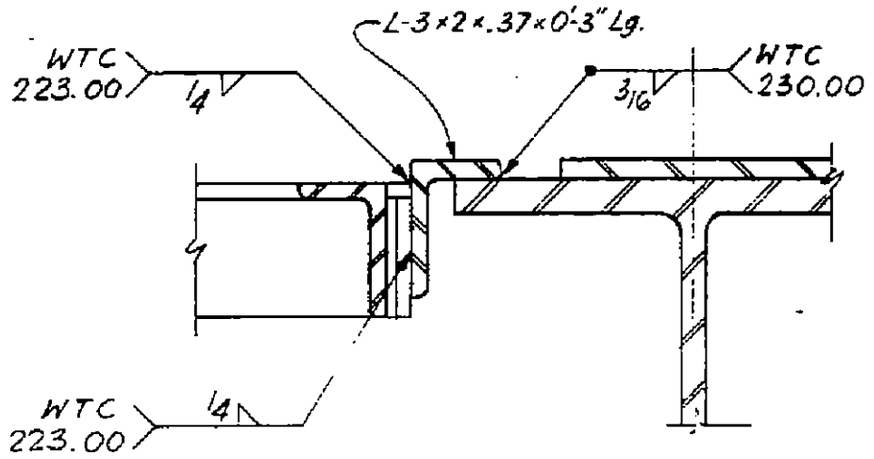

Section a-a

L 3×2 Deck Bms Top El. same as Top El. WF Bms

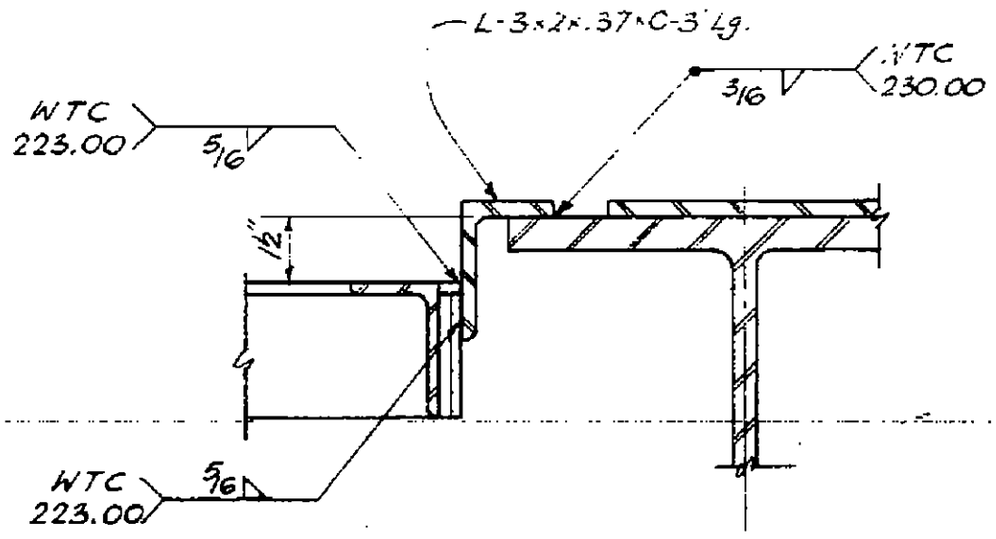

Section a-a

L 3×2 Deck Bms. Top El. below El. WF-Bms.

LICENSED PROFESSIONAL ENGINEER
LESLIE E. ROBERTSON
No. 34360
UNIVERSITY OF THE STATE OF NEW YORK

DESIGNED

DRAWN

REVIEWED

7-AB4-45.1

SKILLING - HELLE - CHRISTIANSEN - ROBERTSON — Structural & Civil Engineers

PROJECT ~~THE WORLD TRADE CENTER~~ | TITLE FLOOR PANEL - ~~DETAIL~~ EGO & EG8 | DATE 1-3-68

REVISIONS

4-1-68
7-22-68
10-15-68

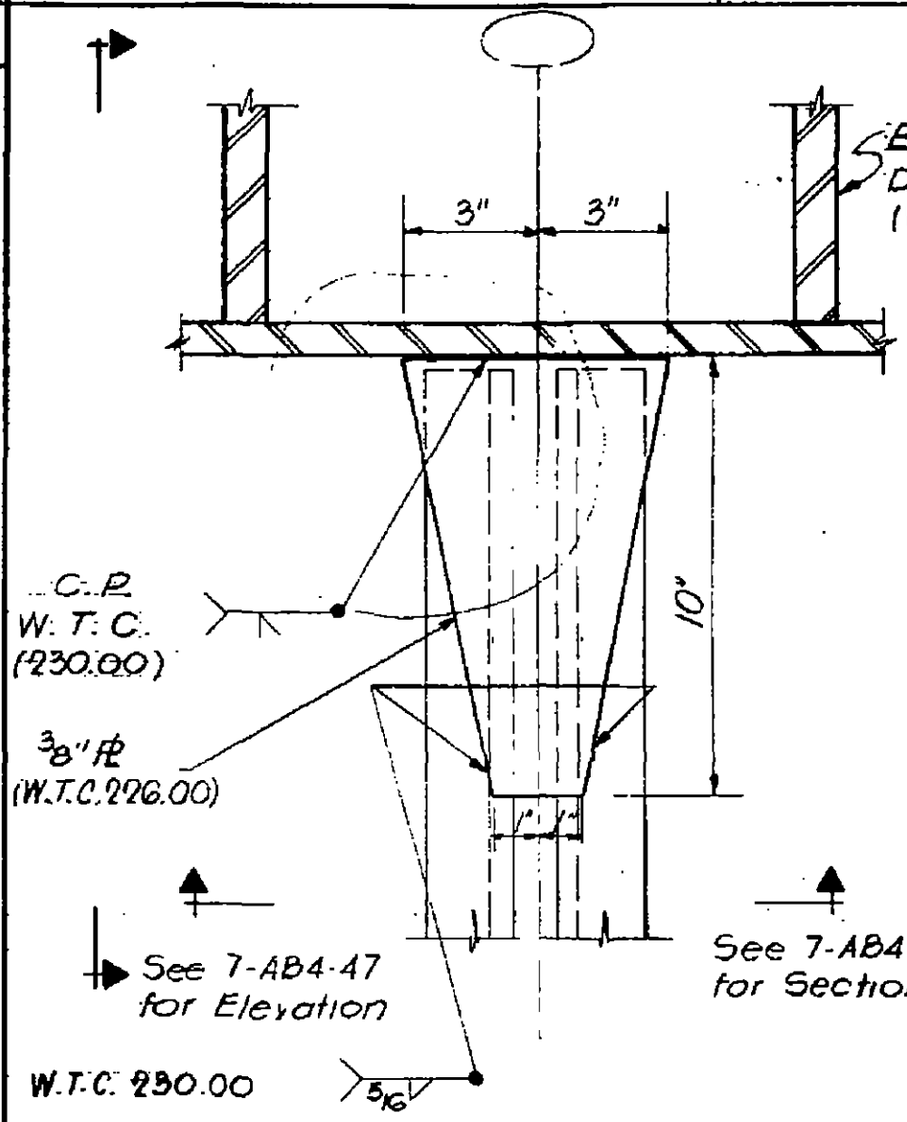

Detail EGO

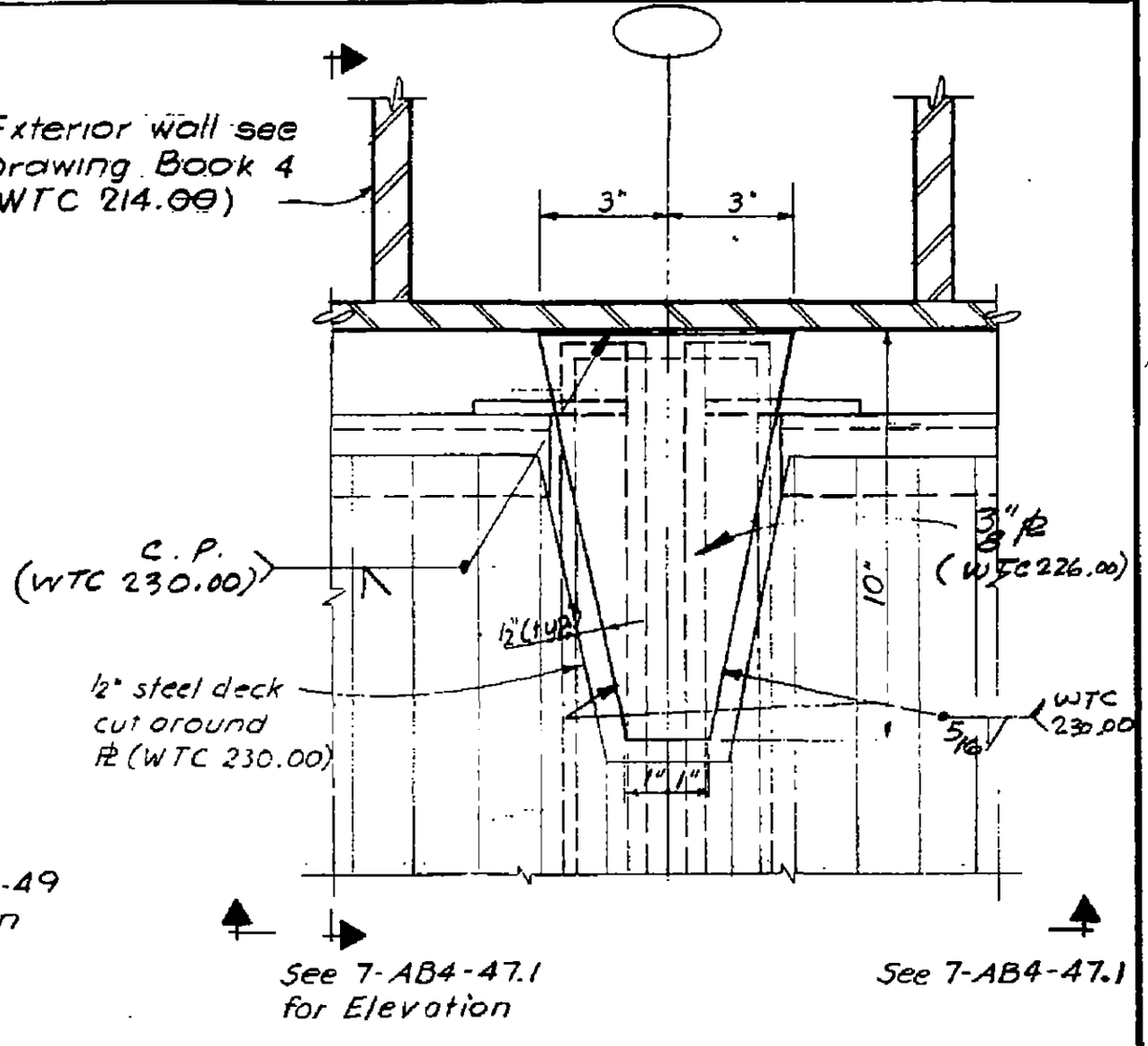

Detail E68

LICENSED PROFESSIONAL ENGINEER — LESLIE E. ROBERTSON — No. 34360 — UNIVERSITY OF THE STATE OF NEW YORK

7-AB4-46

SKILLING, HELLE, CHRISTIANSEN, ROBERTSON — Structural & Civil Engineers

PROJECT: THE WORLD TRADE CENTER | TITLE: FLOOR PANEL - DETAIL E 68 A | DATE: 7-22-68

REVISIONS

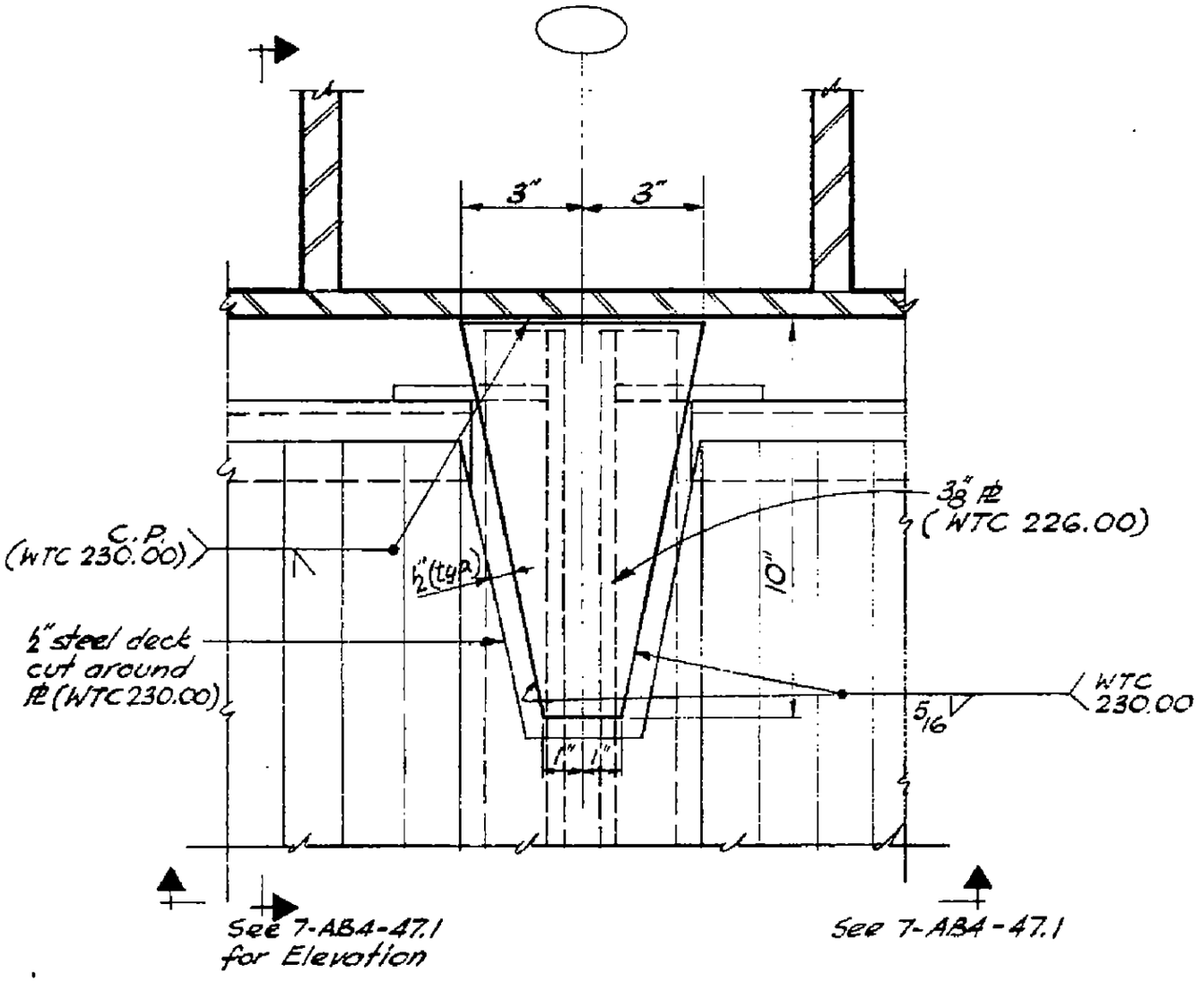

Detail E 68A

LICENSED PROFESSIONAL ENGINEER — LESLIE E. ROBERTSON — No. 34360 — UNIVERSITY OF THE STATE OF NEW YORK

DESIGNED

DRAWN

REVIEWED

95

7-AB4-46.1

SKILLING - HELLE - CHRISTIANSEN - ROBERTSON Structural & Civil Engineers

PROJECT THE WORLD TRADE CENTER | TITLE DETAIL E60, E61, E62, E63, E64, E65, E66, E67 | DATE 10-20-67

REVISIONS

1-3-68
4-1-68
7-22-68

For plan see:
7-AB4-44 E61 - E64; E66 & E67
7-AB4-45 E65
7-AB4-46 E60

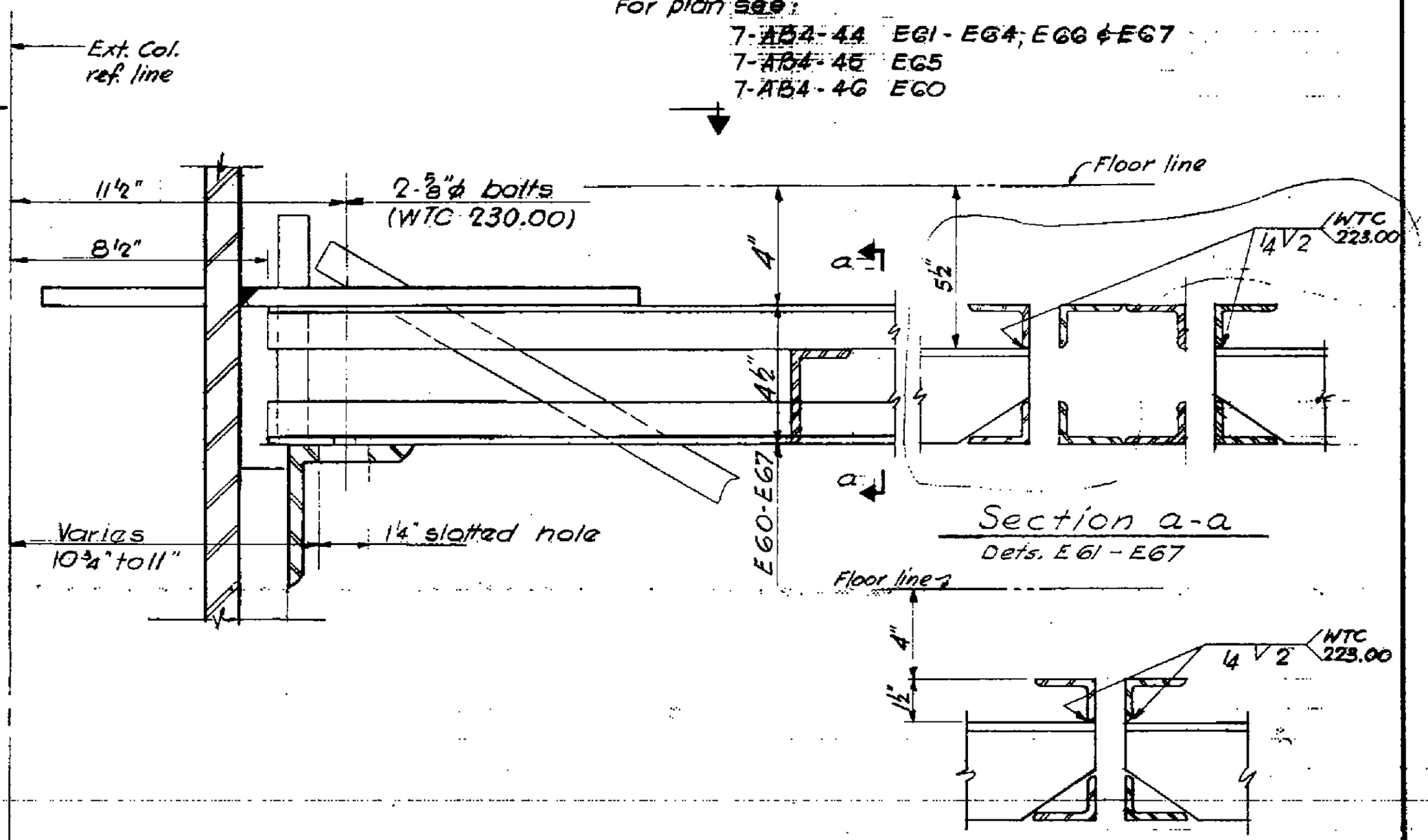

Section a-a
Dets. E61 - E67

Section a-a
Detail E60 only

LICENSED PROFESSIONAL ENGINEER
LESLIE E. ROBERTSON
No. 34360
UNIVERSITY OF THE STATE OF NEW YORK

7-AB4-47

SKILLING - HELLE - CHRISTIANSEN - ROBERTSON Structural & Civil Engineers

PROJECT THE WORLD TRADE CENTER TITLE DETAIL E68 & E68A DATE 4-1-68

REVISIONS

7-22-68
10-15-68

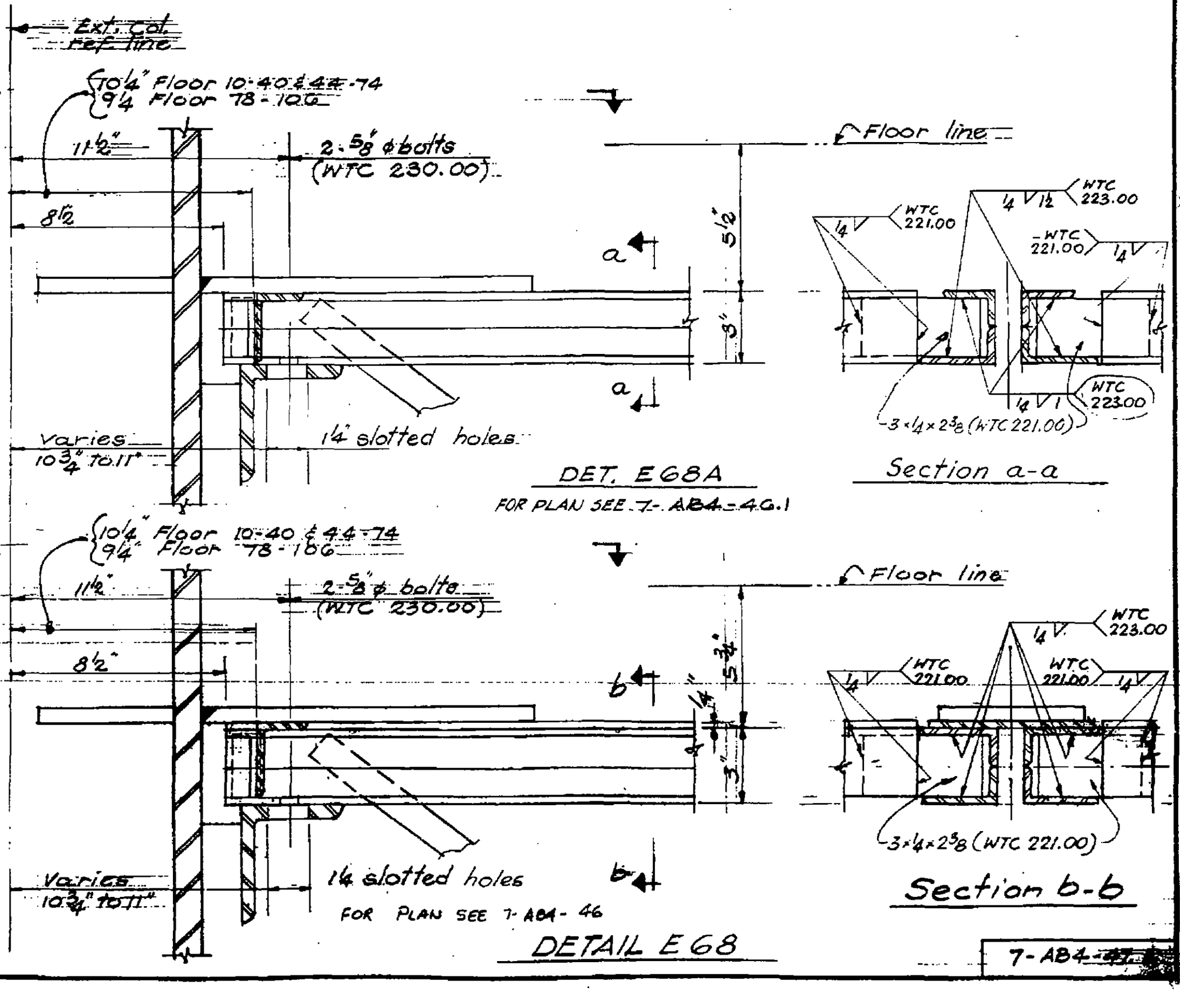

DET. E68A

FOR PLAN SEE 7-AB4-46.1

Section a-a

FOR PLAN SEE 7-AB4-46

DETAIL E68

Section b-b

LICENSED PROFESSIONAL ENGINEER
LESLIE E. ROBERTSON
No. 34360
UNIVERSITY OF THE STATE OF NEW YORK

7-AB4-47

92

SKILLING - HELLE - CHRISTIANSEN - ROBERTSON Structural & Civil Engineers

PROJECT THE WORLD TRADE CENTER | TITLE DETAIL EG1, EG2, EG3 & EG4 | DATE 10-20-67

REVISIONS

1-3-68

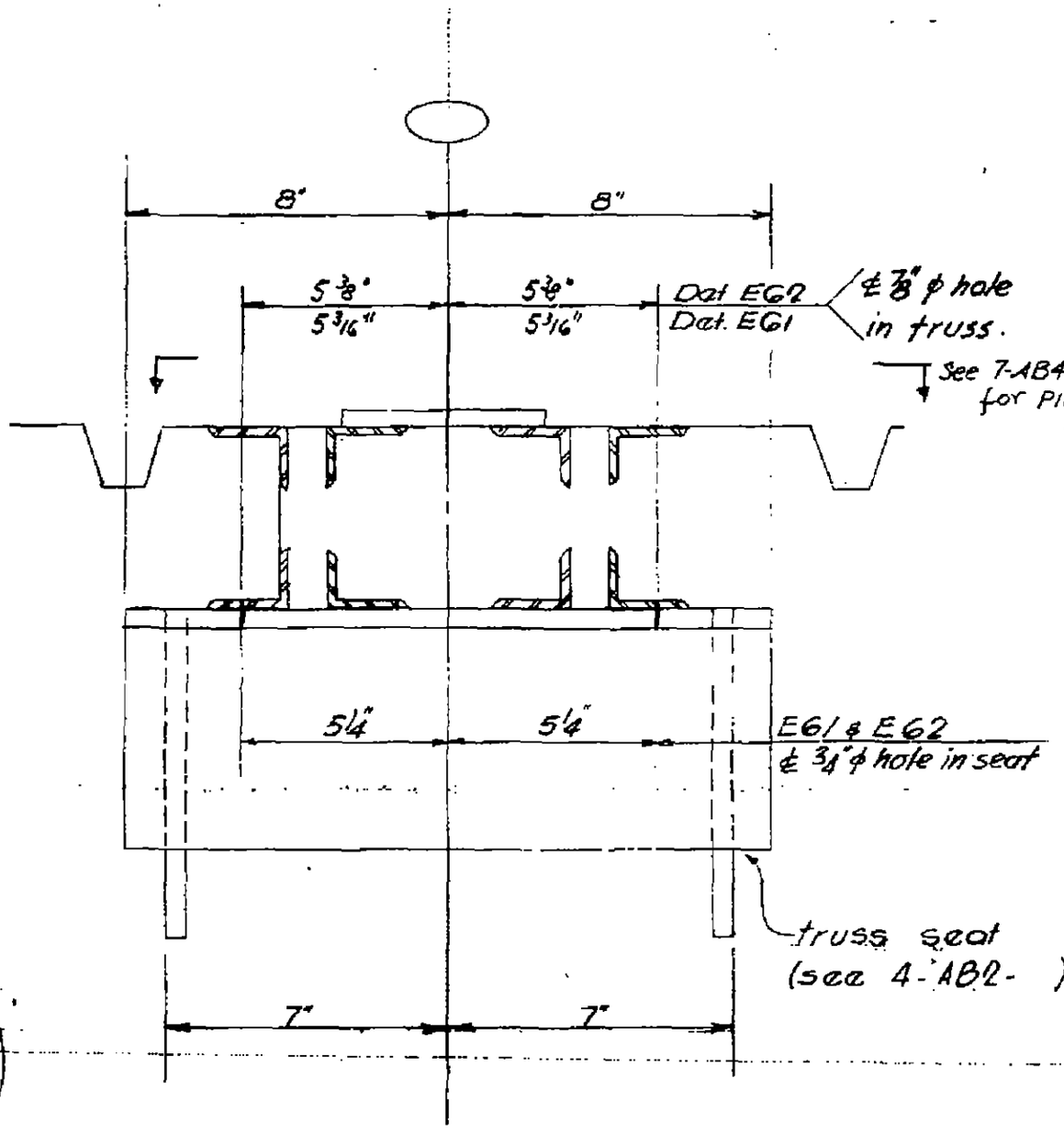

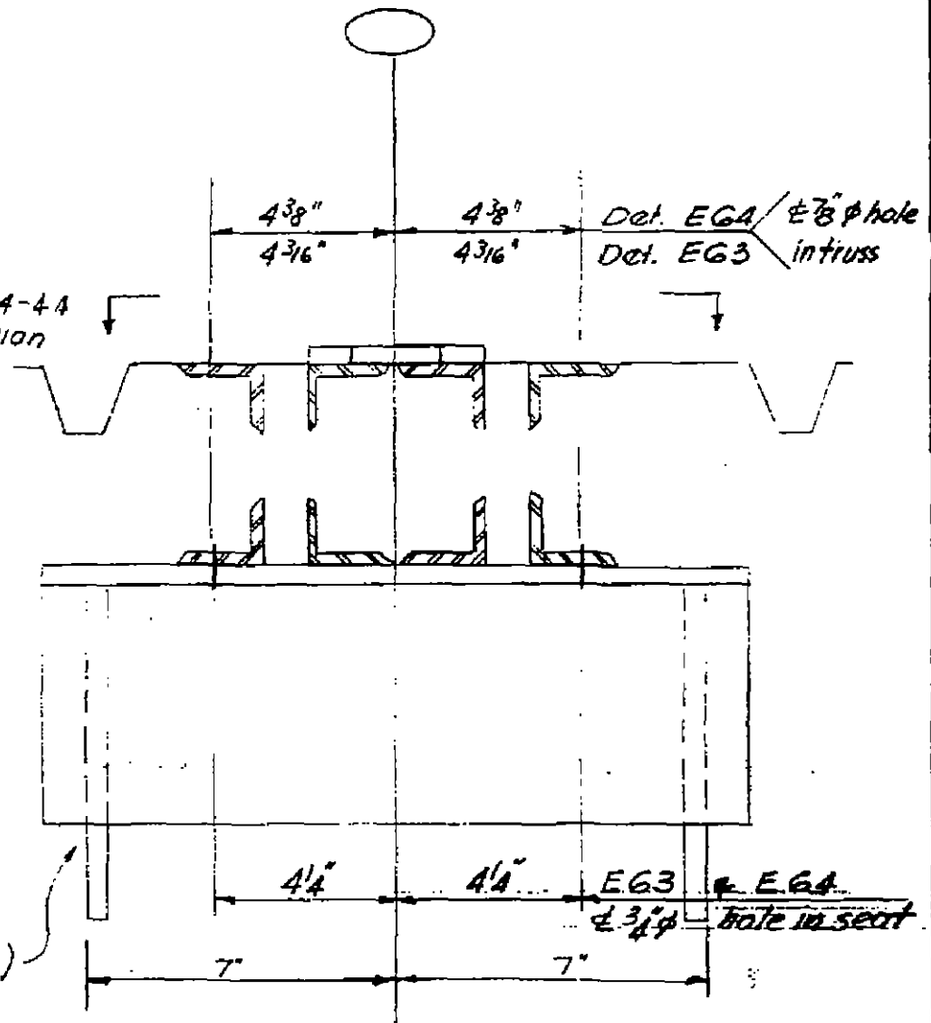

LICENSED PROFESSIONAL ENGINEER
LESLIE E. ROBERTSON
No. 32360
REGISTERED IN THE STATE OF NEW YORK

10

7-AB4-48

SKILLING - HELLE - CHRISTIANSEN - ROBERTSON Structural & Civil Engineers

PROJECT THE WORLD TRADE CENTER | TITLE FLOOR PANEL - DETAIL E60, E66, E67 | DATE 10-20-67

REVISIONS

1-3-68
4-1-68
7-22-68

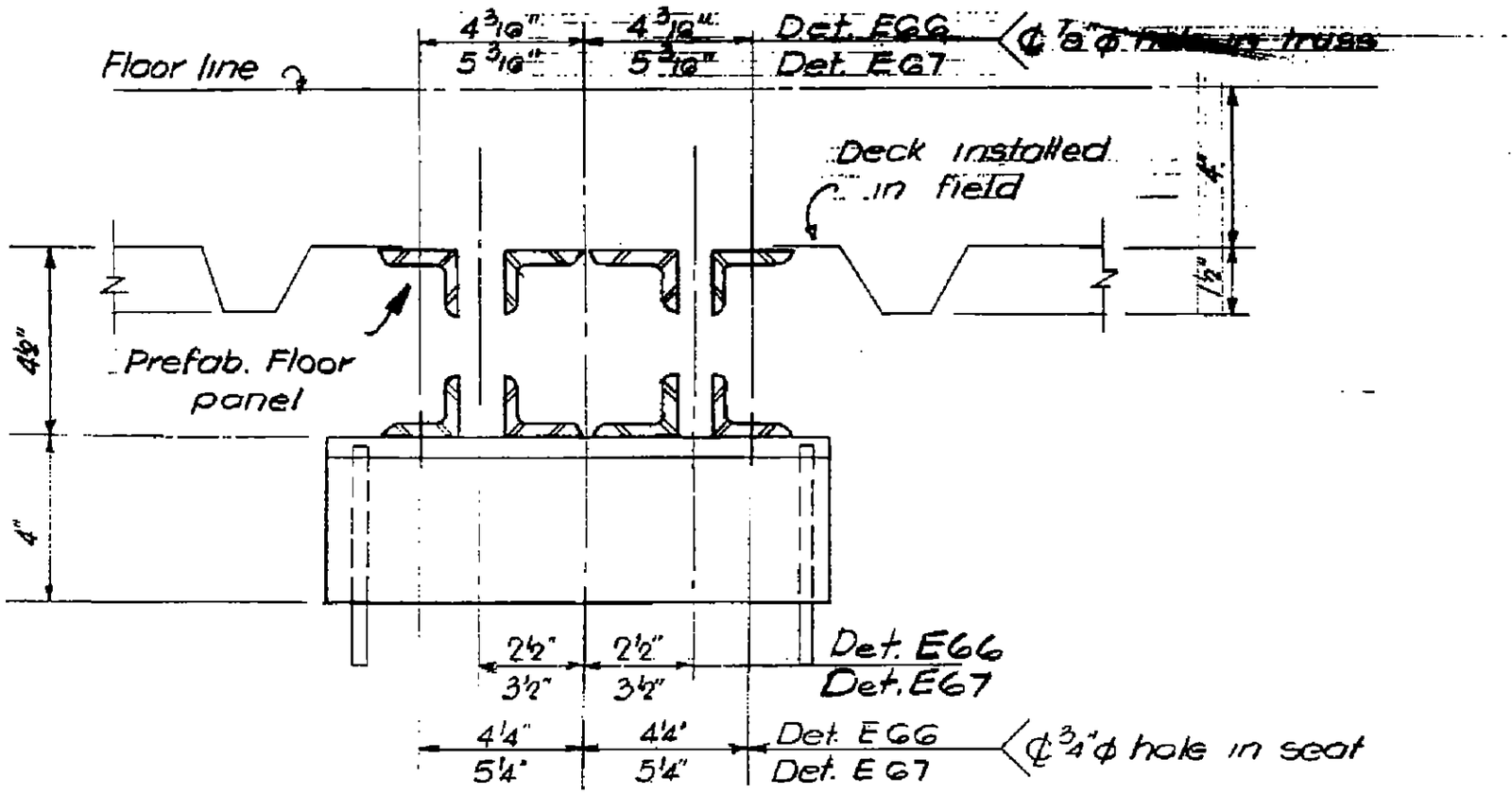

Detail E66 & E67

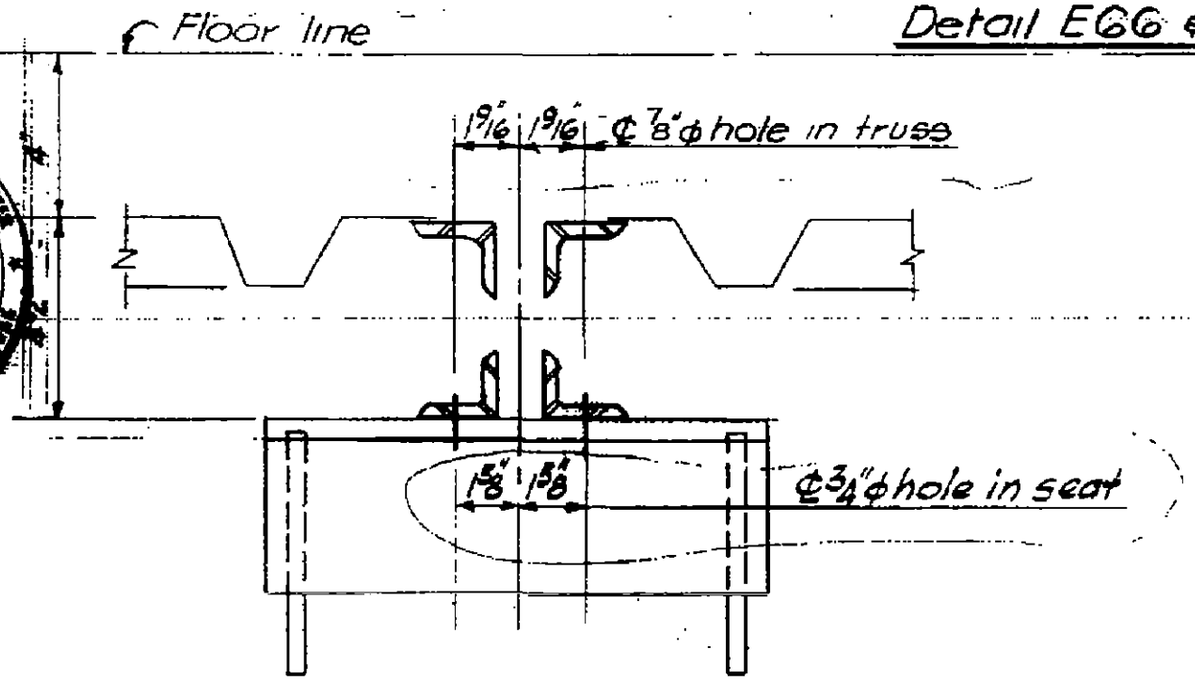

Detail E60

LESLIE E. ROBERTSON
No. 34360
UNIVERSITY OF THE STATE OF NEW YORK

98

7-AB4-49

SKILLING, HELLE, CHRISTIANSEN, ROBERTSON — Structural & Civil Engineers

PROJECT THE WORLD TRADE CENTER | TITLE FLOOR PANEL – DETAIL E68 & E68A | DATE 7-22-68

REVISIONS

10-15-68

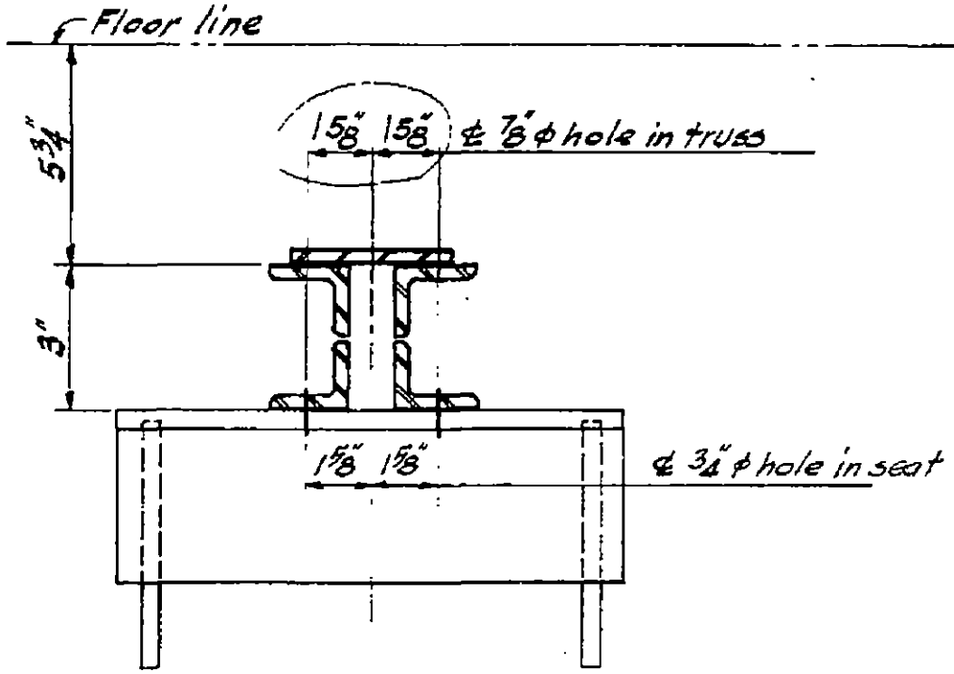

Detail E 68

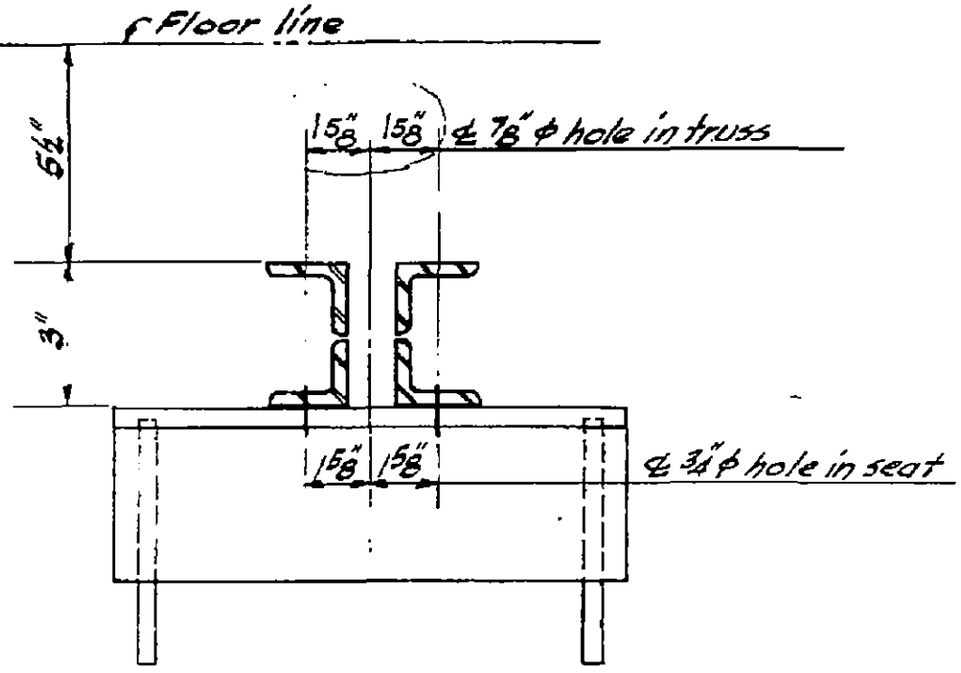

Detail E 68A

LICENSED PROFESSIONAL ENGINEER
LESLIE E. ROBERTSON
No. 34360
UNIVERSITY OF THE STATE OF NEW YORK

DESIGNED

DRAWN

REVIEWED
99

7-AB4-49.1

SKILLING, HELLE, CHRISTIANSEN, ROBERTSON — Structural & Civil Engineers

PROJECT: THE WORLD TRADE CENTER | TITLE: FLOOR PANEL - DETAIL E 69 | DATE: 8-15-68

REVISIONS

10-4-68

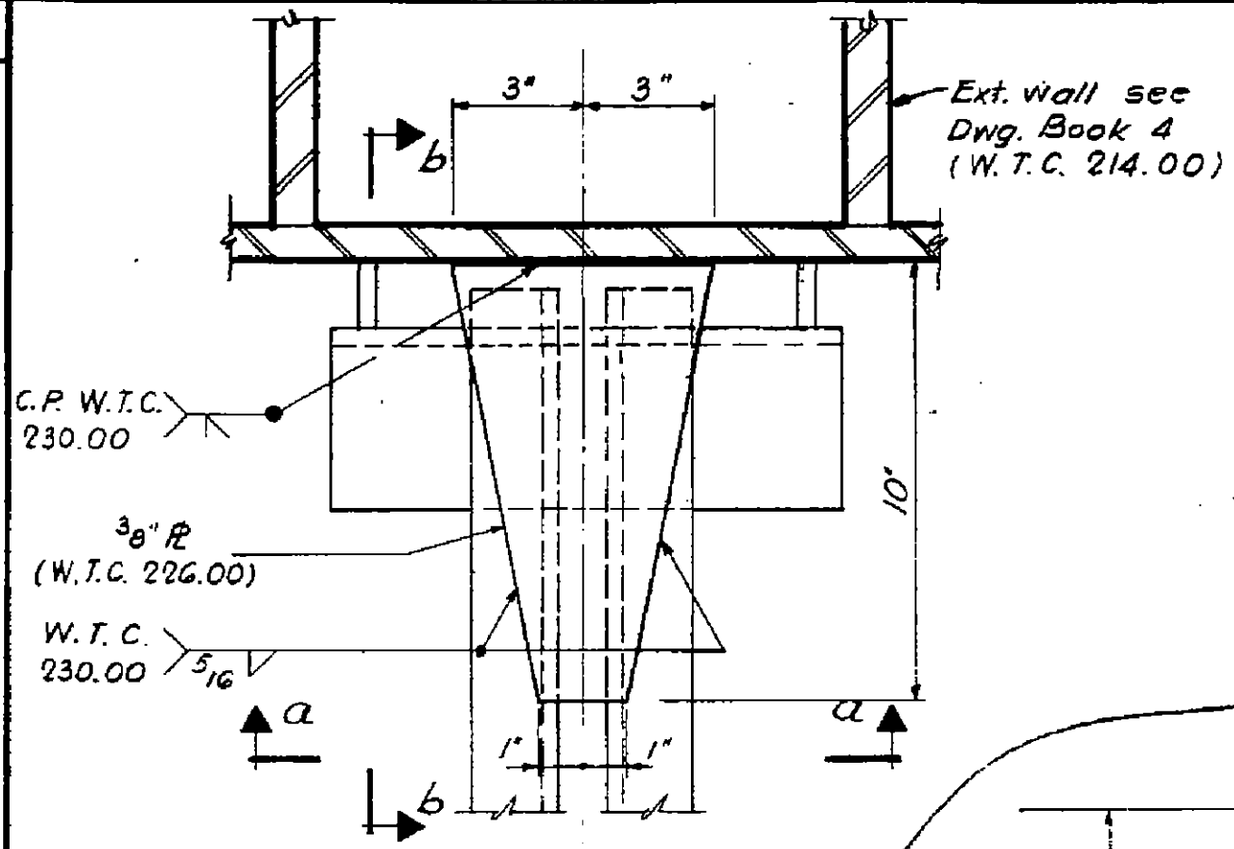

Plan

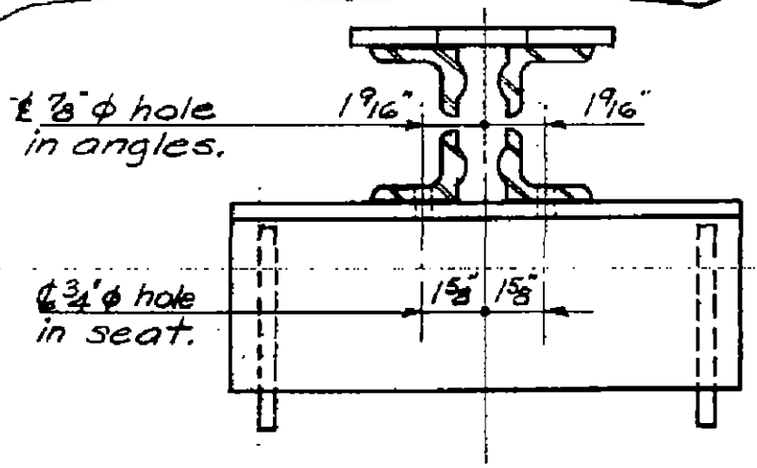

Section a-a

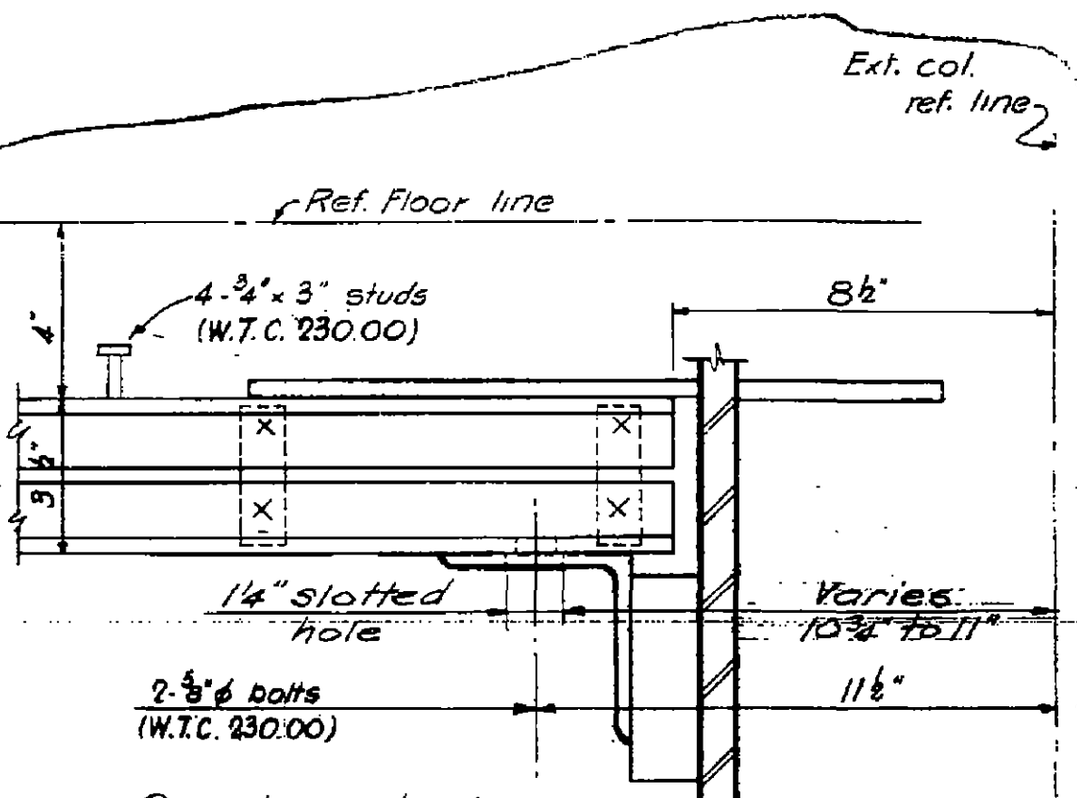

Section b-b

LICENSED PROFESSIONAL ENGINEER — LESLIE E. ROBERTSON — No. 34960 — REGISTERED IN THE STATE OF NEW YORK

DESIGNED

DRAWN

REVIEWED

7-AB4-49.2

SKILLING, HELLE, CHRISTIANSEN, ROBERTSON — Structural & Civil Engineers

PROJECT THE WORLD TRADE CENTER | TITLE DETAIL E70, E71, E72, E73 | DATE 8-1-68

REVISIONS

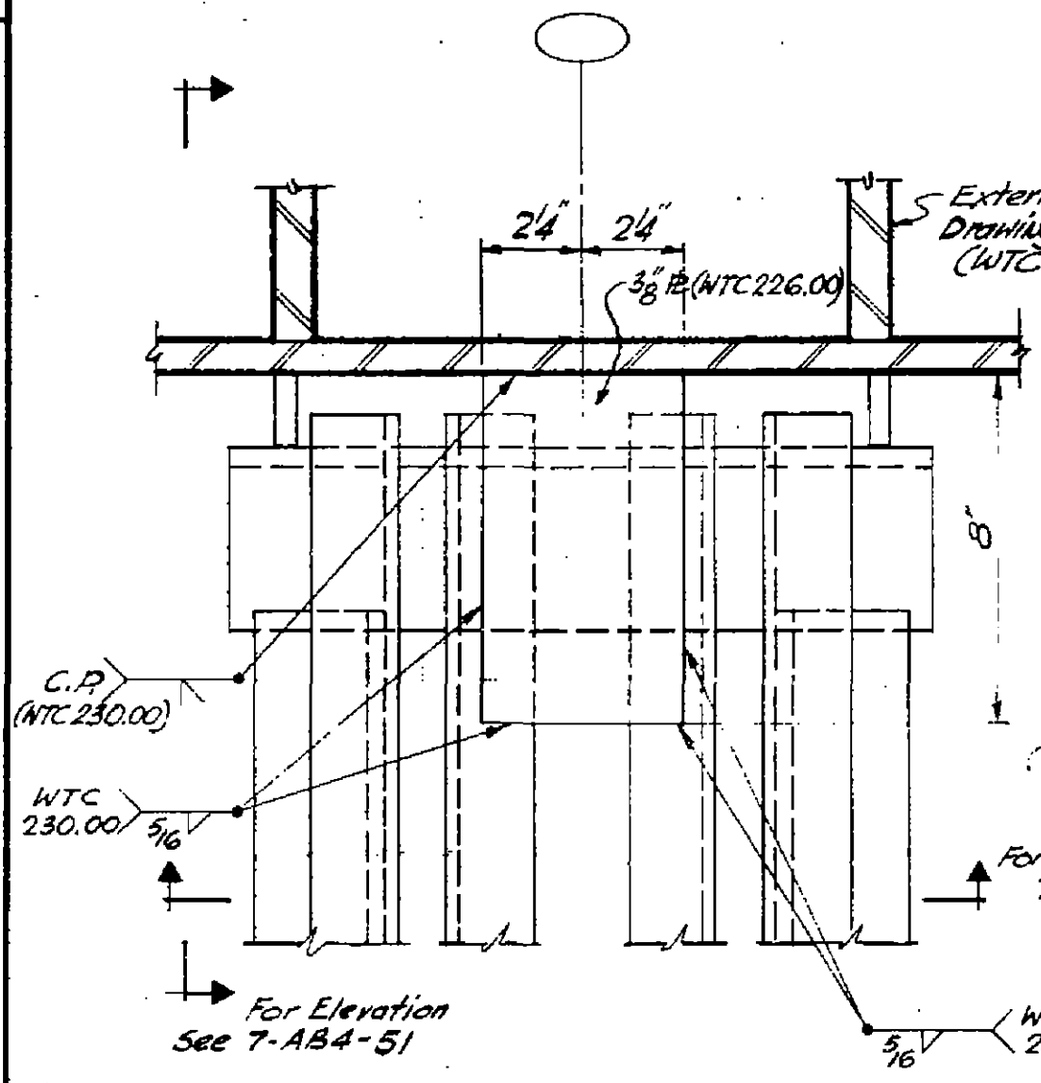

E70 & E71

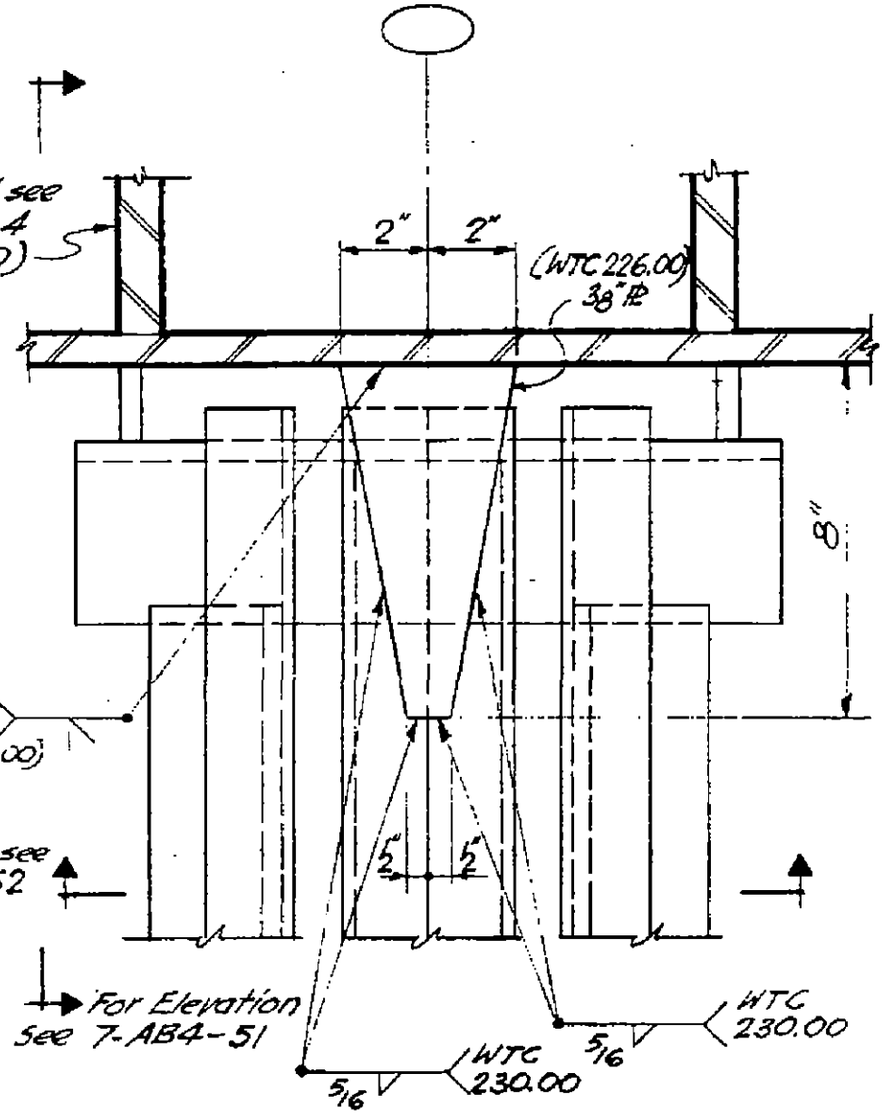

E72 & E73

DESIGNED

DRAWN

REVIEWED

7-AB4-50

SKILLING, HELLE, CHRISTIANSEN, ROBERTSON — Structural & Civil Engineers

PROJECT: THE WORLD TRADE CENTER | TITLE: DETAIL E70, E71, E72, E73 | DATE: 8-1-68

REVISIONS

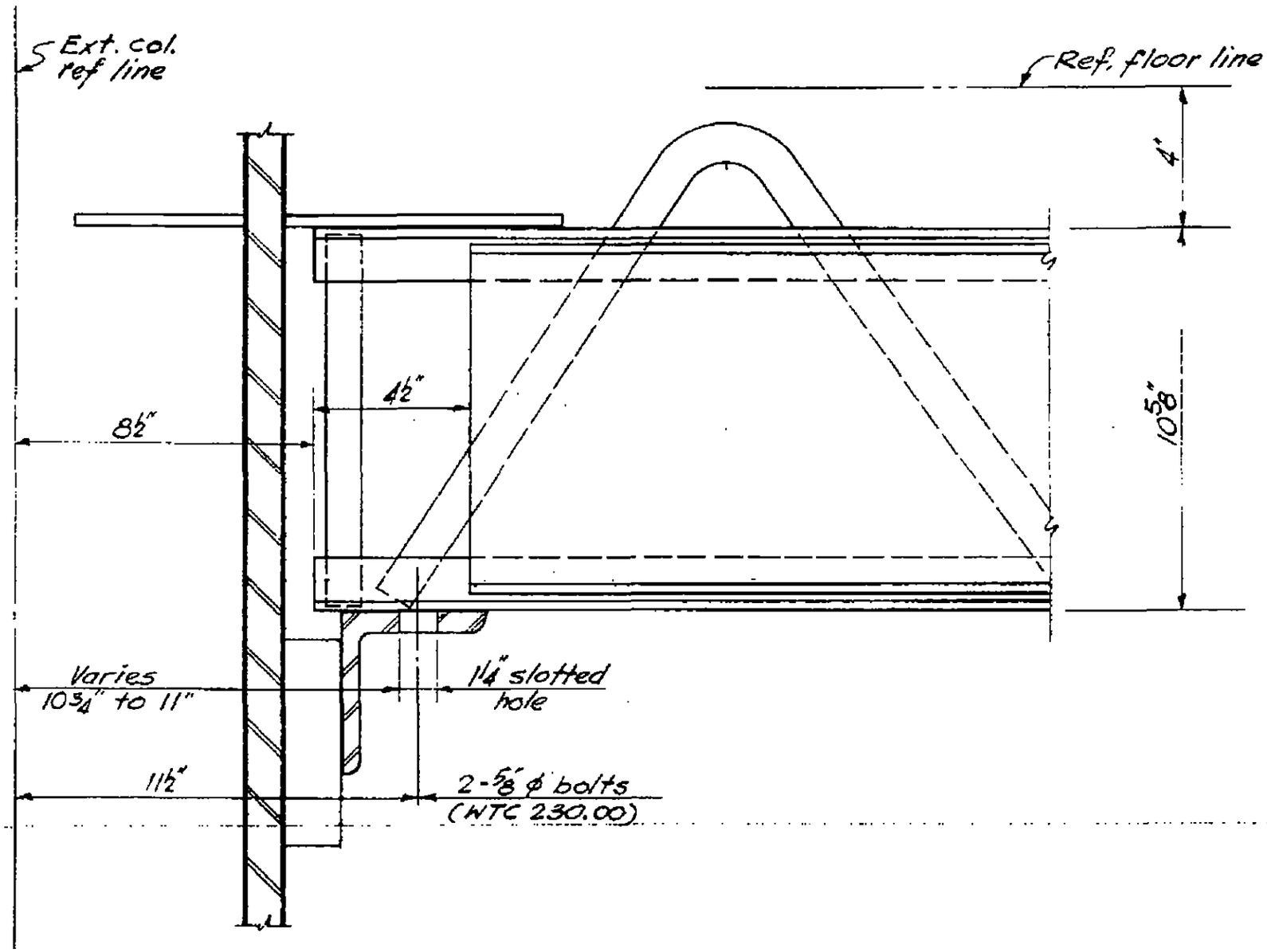

DESIGNED

DRAWN

REVIEWED

7-AB4-51

SKILLING, HELLE, CHRISTIANSEN, ROBERTSON — Structural & Civil Engineers

PROJECT: THE WORLD TRADE CENTER | TITLE: DETAIL E 70, E 71, E 72, E 73 | DATE: 8-1-68

REVISIONS

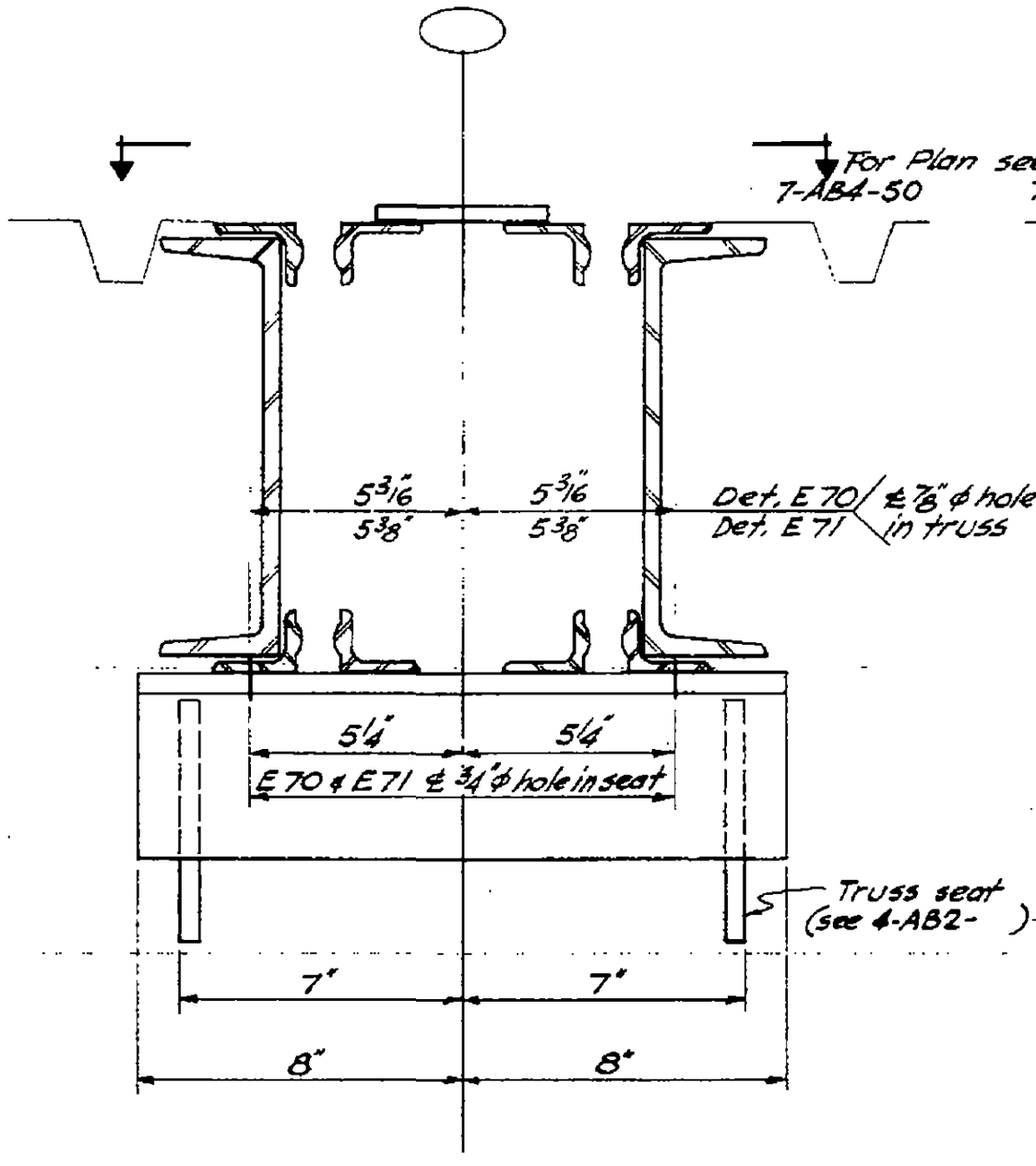

E 70
E 71

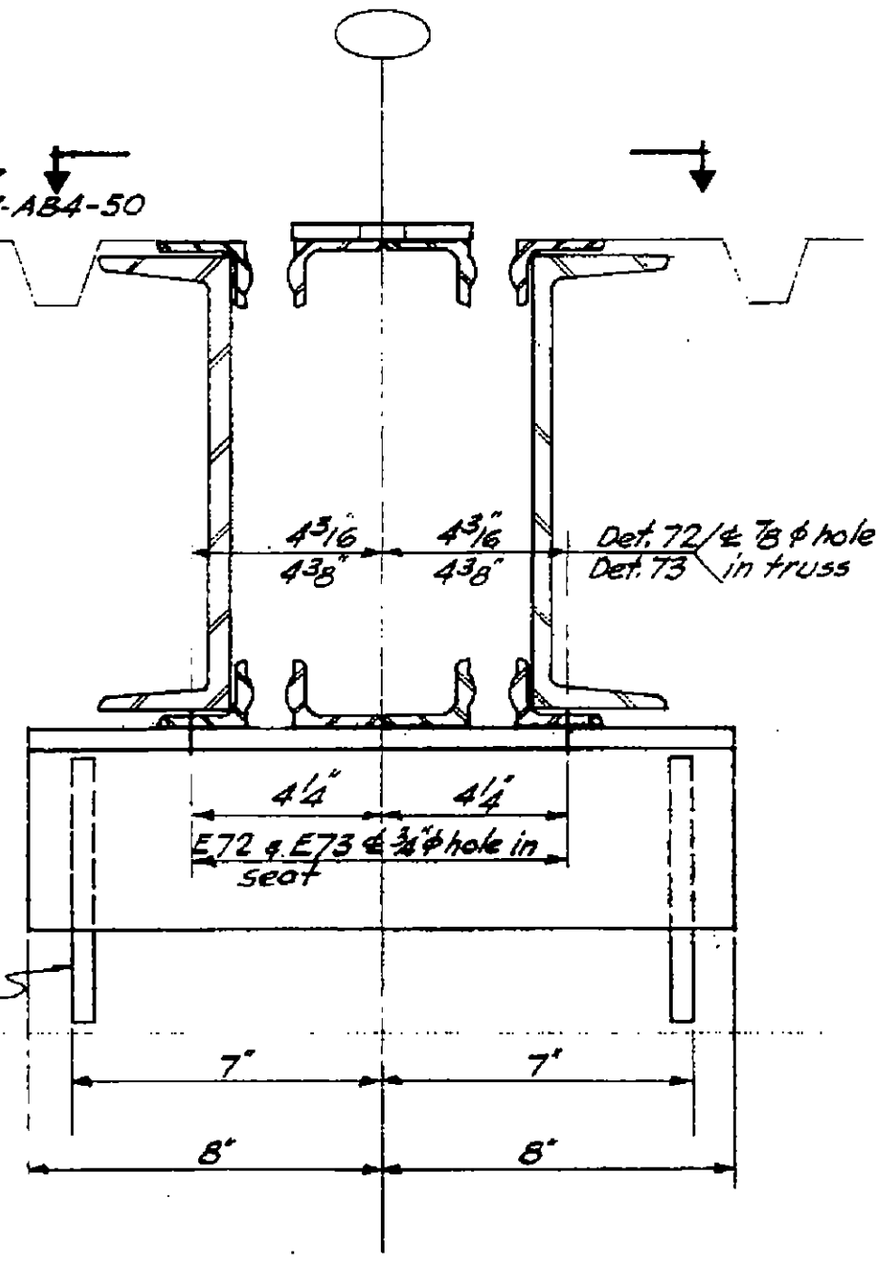

E 72
E 73

DESIGNED

DRAWN

REVIEWED

7-AB4-52

SKILLING, HELLE, CHRISTIANSEN, ROBERTSON — Structural & Civil Engineers

PROJECT: THE WORLD TRADE CENTER | TITLE: FLOOR PANEL - DETAIL E 74 | DATE: 8-15-68

REVISIONS

10-4-68

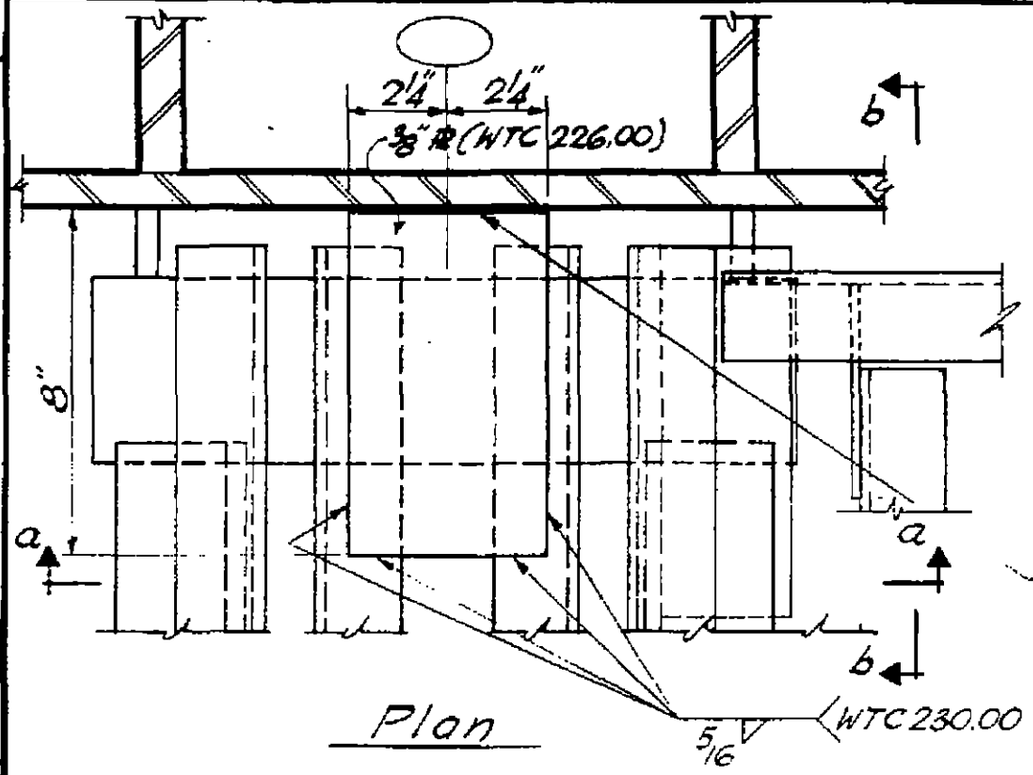

Plan

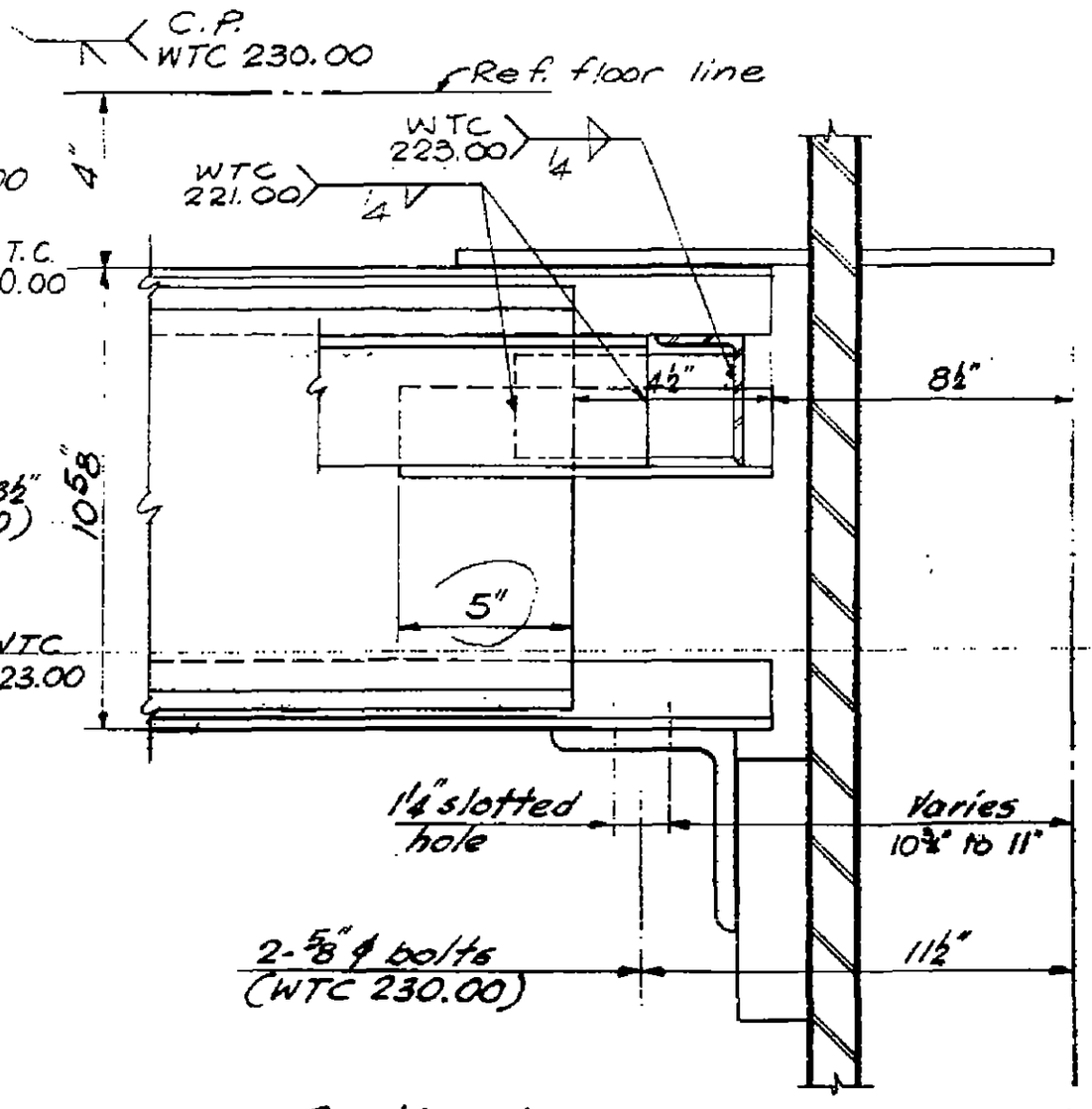

Section b-b

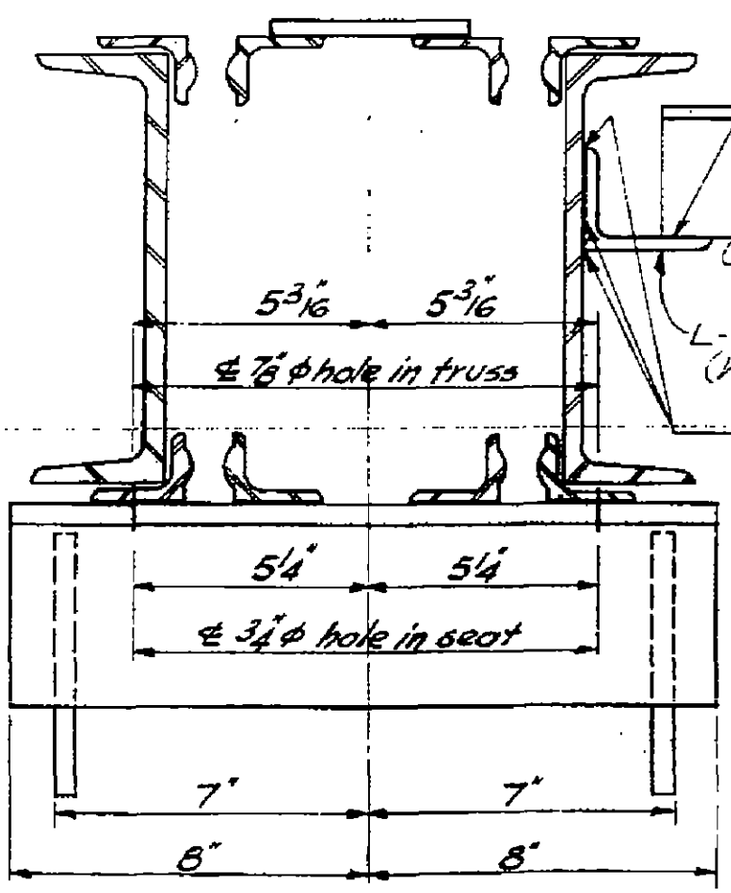

Section a-a

LICENSED PROFESSIONAL ENGINEER
LESLIE E. ROBERTSON
No. 34360
UNIVERSITY OF THE STATE OF NEW YORK

DESIGNED

DRAWN

REVIEWED

7-AB4-53

SKILLING, HELLE, CHRISTIANSEN, ROBERTSON — Structural & Civil Engineers

PROJECT: THE WORLD TRADE CENTER | TITLE: FLOOR PANEL - DETAIL E 75 | DATE: 8-15-68

REVISIONS

10-4-68

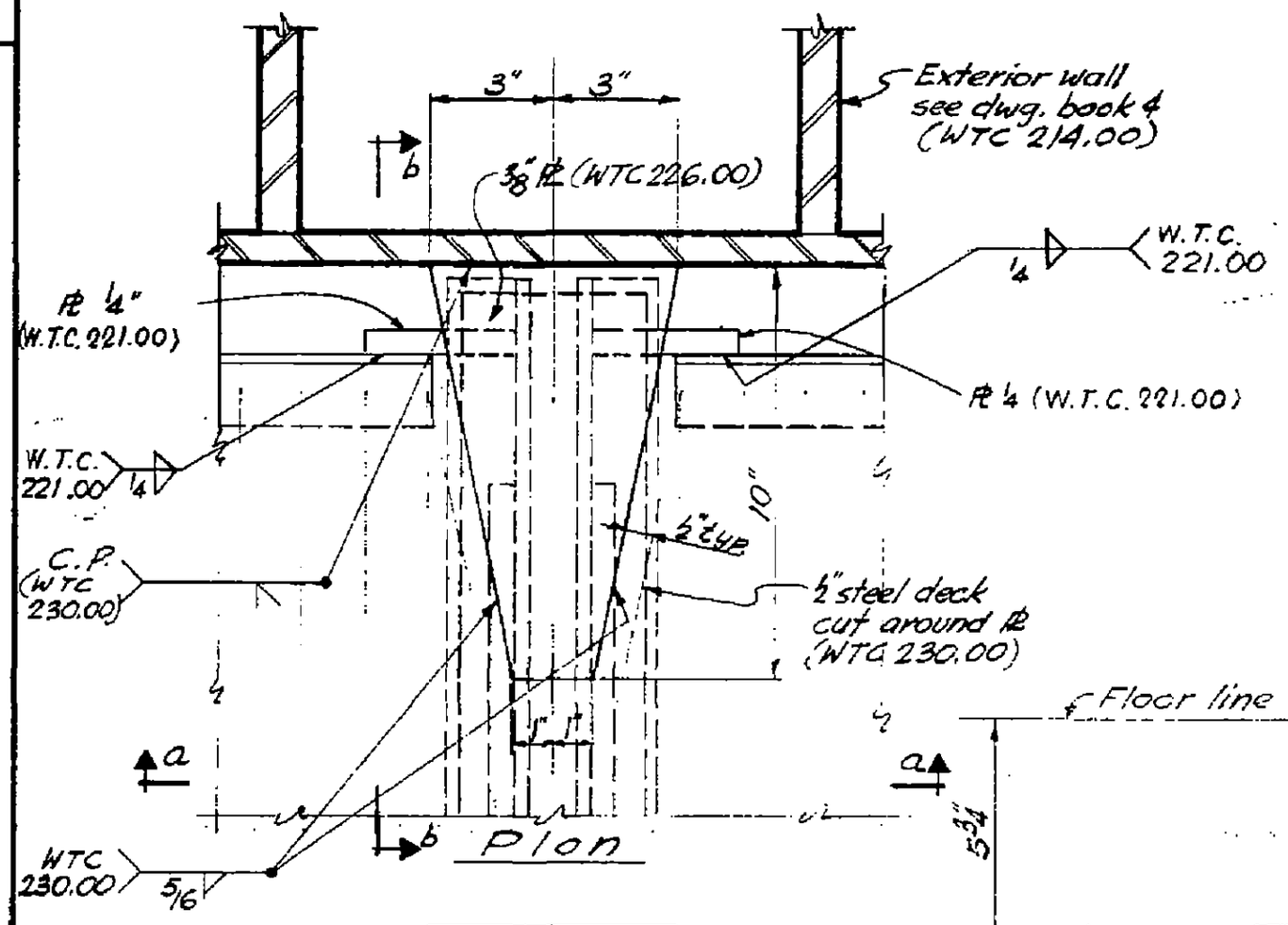

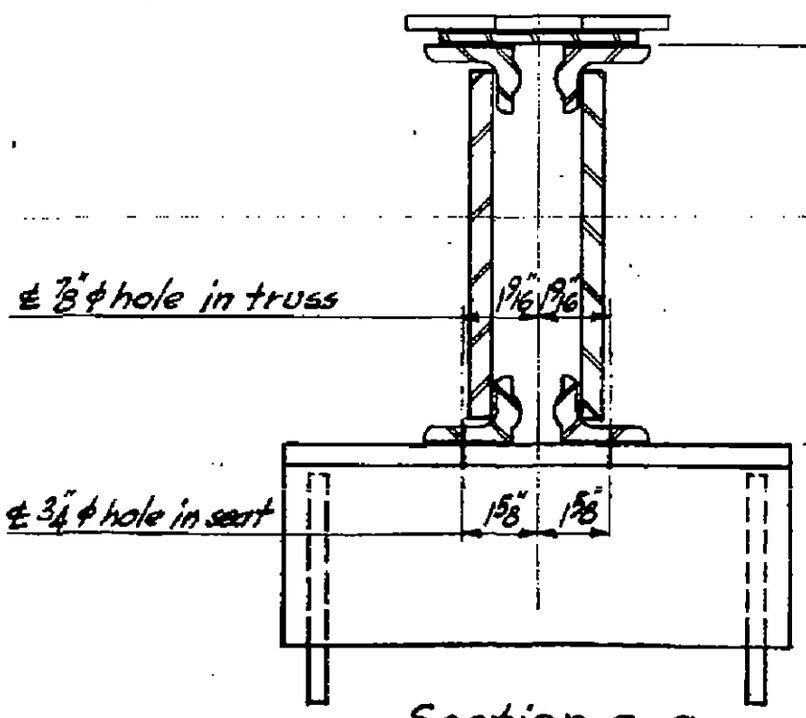

Section a-a

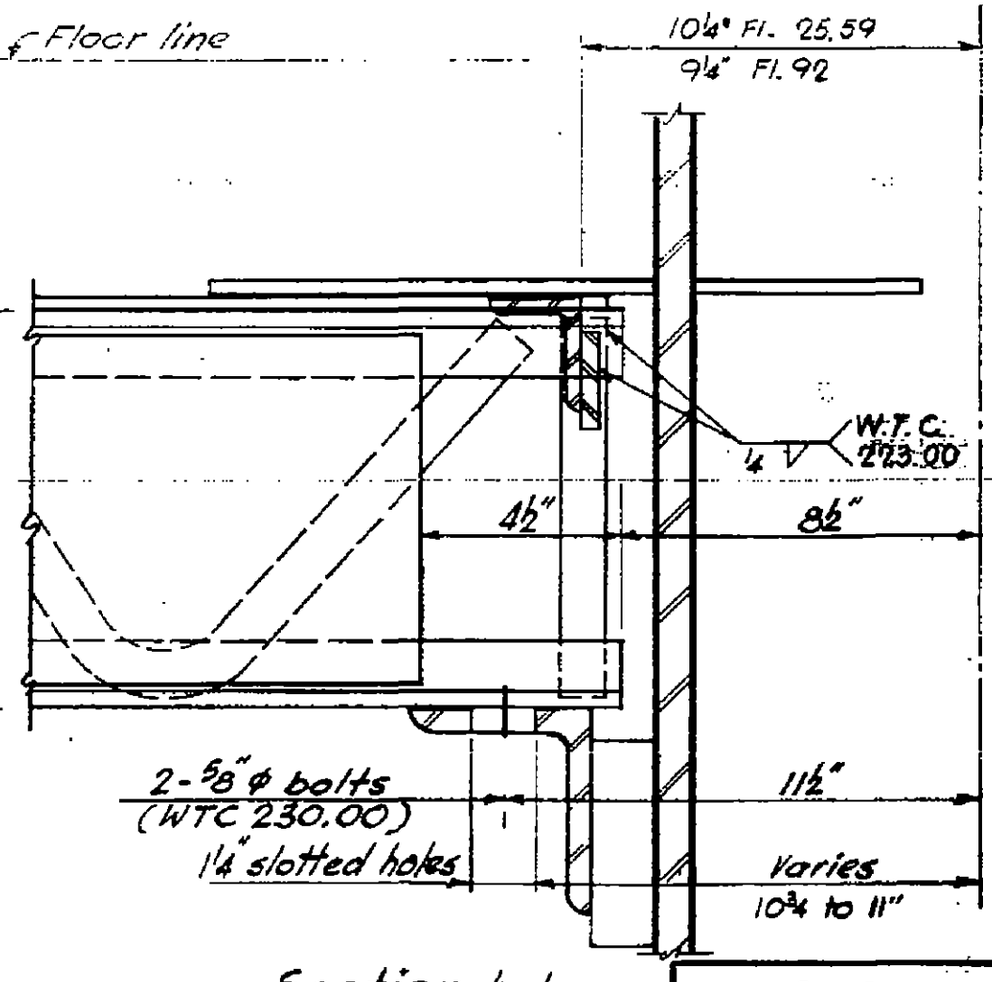

Section b-b

LICENSED PROFESSIONAL ENGINEER — LESLIE E. ROBERTSON — No. 34360 — UNIVERSITY OF THE STATE OF NEW YORK

DESIGNED

DRAWN

REVIEWED

7-AB4-54

SKILLING, HELLE, CHRISTIANSEN, ROBERTSON — Structural & Civil Engineers

PROJECT THE WORLD TRADE CENTER | TITLE FLOOR PANEL - DETAIL E75A | DATE 8-15-68

REVISIONS

10-4-68

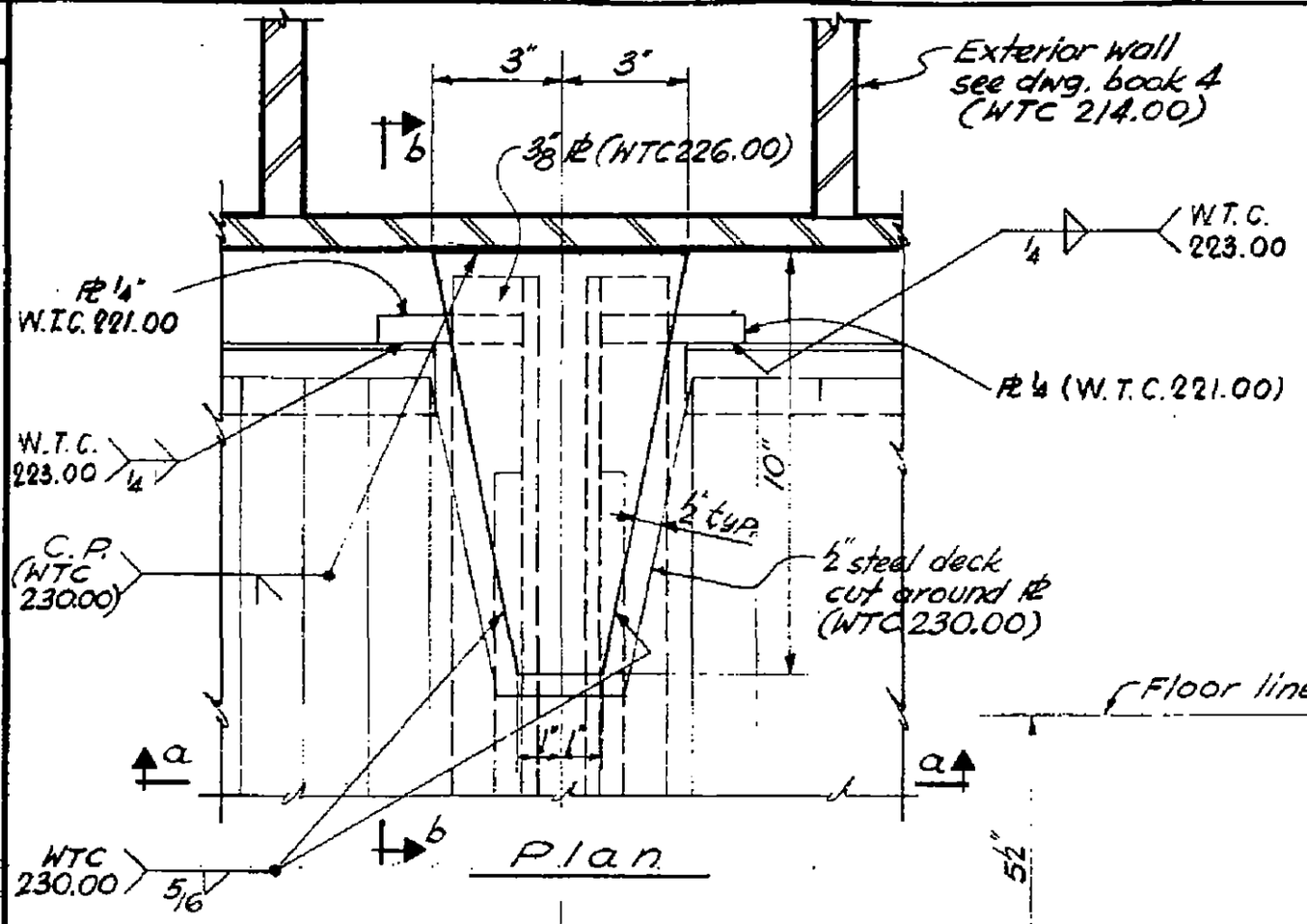

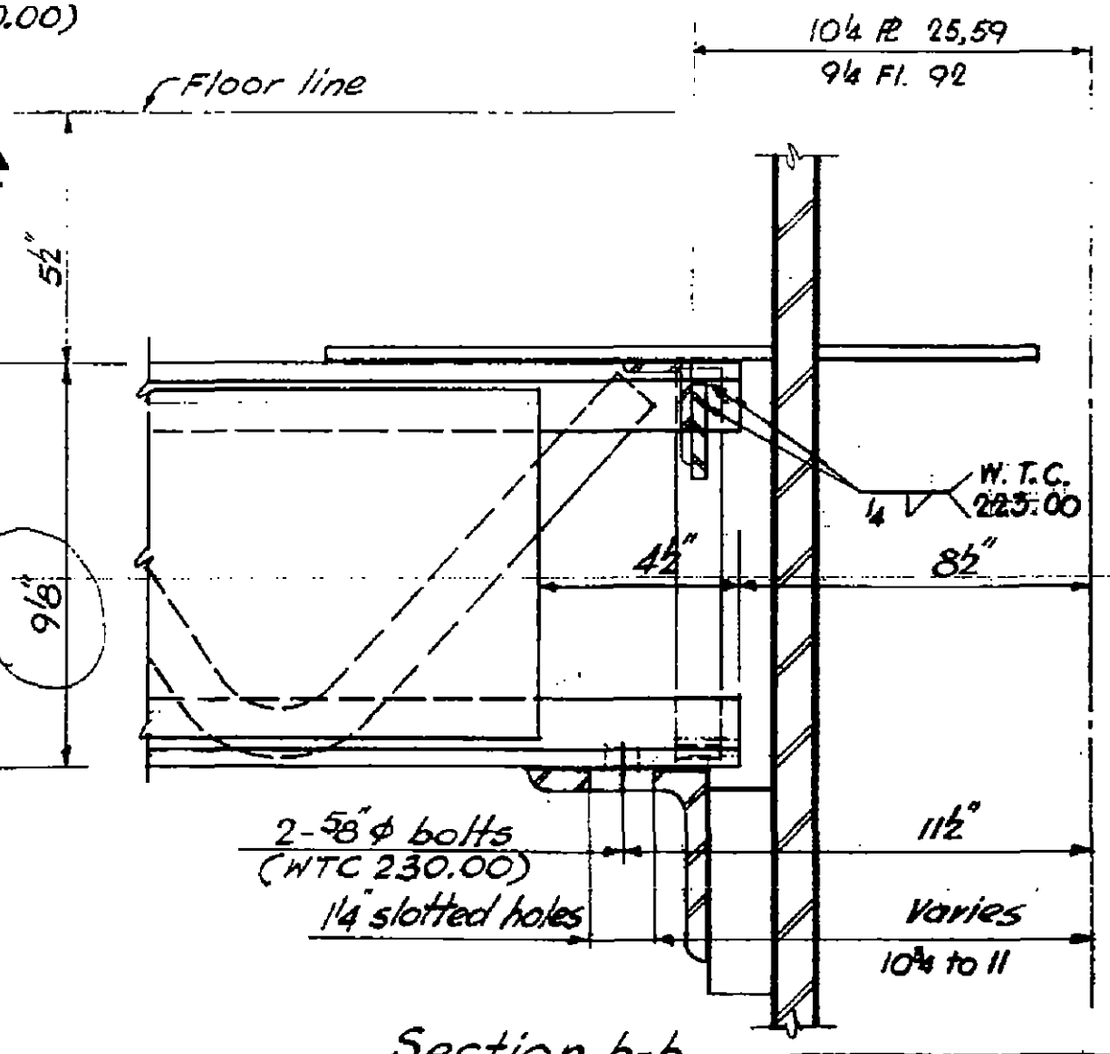

Section a-a

Section b-b

DESIGNED

DRAWN

REVIEWED

7-AB4-55

SKILLING, HELLE, CHRISTIANSEN, ROBERTSON — Structural & Civil Engineers

PROJECT: THE WORLD TRADE CENTER | TITLE: FLOOR PANEL - DETAIL E 7G | DATE: 8-15-68

REVISIONS

10-4-68

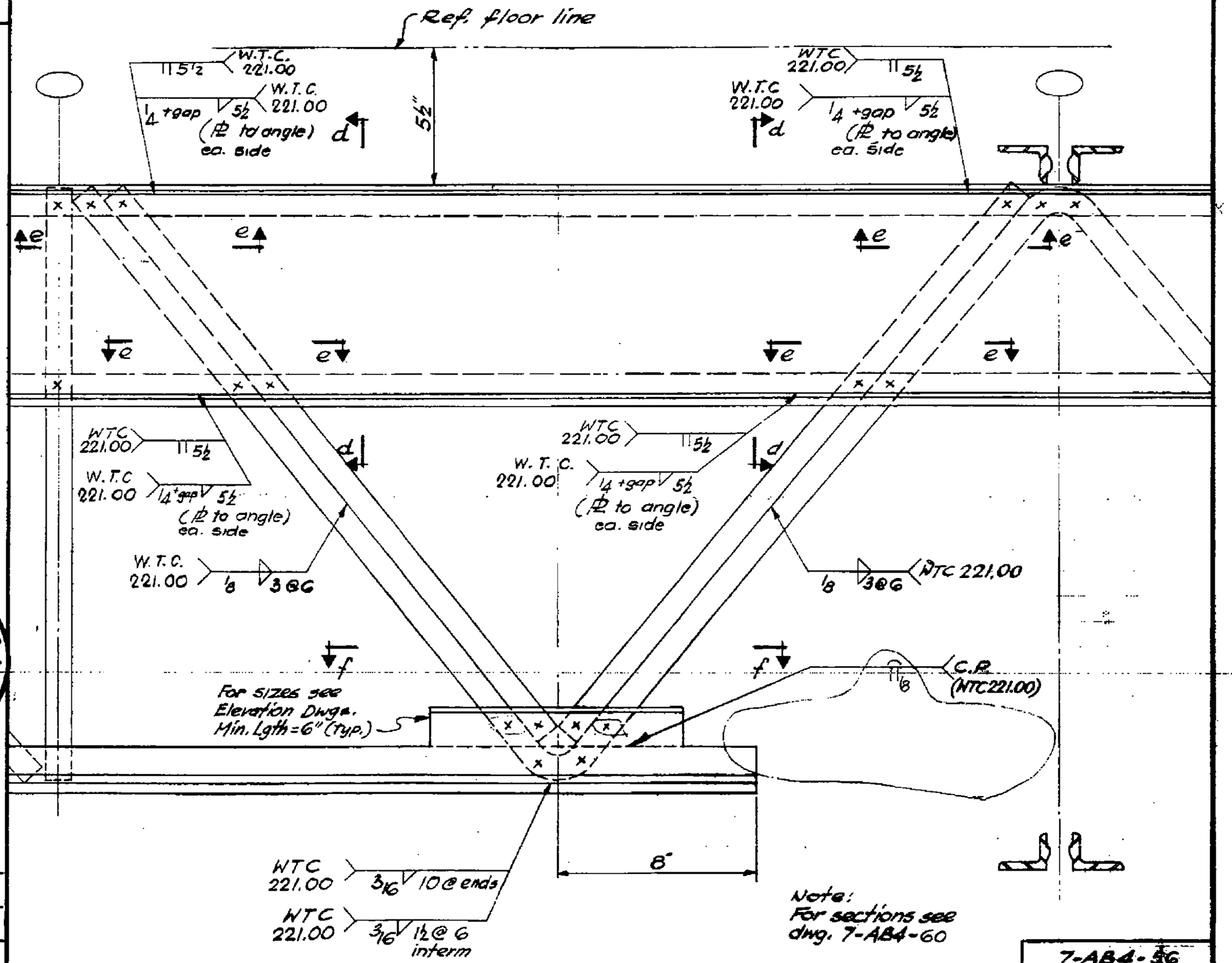

Note: For sections see dwg. 7-AB4-60

LICENSED PROFESSIONAL ENGINEER — LESLIE E. ROBERTSON — No. 34850 — UNIVERSITY OF THE STATE OF NEW YORK

DESIGNED

DRAWN

REVIEWED

7-AB4-5G

SKILLING, HELLE, CHRISTIANSEN, ROBERTSON — Structural & Civil Engineers

PROJECT THE WORLD TRADE CENTER | TITLE FLOOR PANEL - DETAIL E76 | DATE 8-15-68

REVISIONS

10-4-68

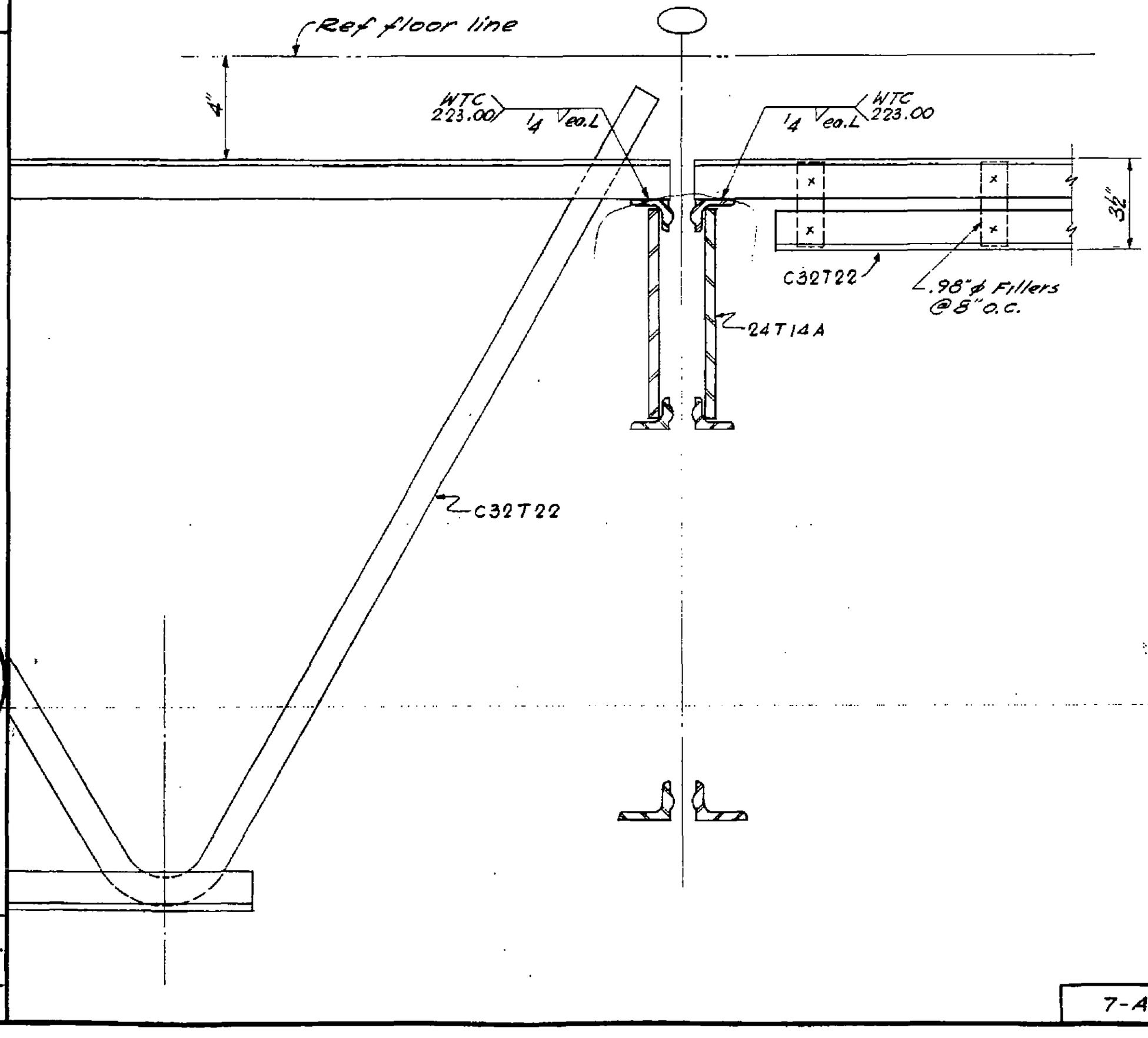

LICENSED PROFESSIONAL ENGINEER
LESLIE E. ROBERTSON
No. 54360
UNIVERSITY OF THE STATE OF NEW YORK

DESIGNED

DRAWN

REVIEWED

7-AB4-57

SKILLING, HELLE, CHRISTIANSEN, ROBERTSON — Structural & Civil Engineers

PROJECT: THE WORLD TRADE CENTER | TITLE: FLOOR PANEL - DETAIL E 7G A, E 7G B | DATE: 8-15-68

REVISIONS

10-4-68

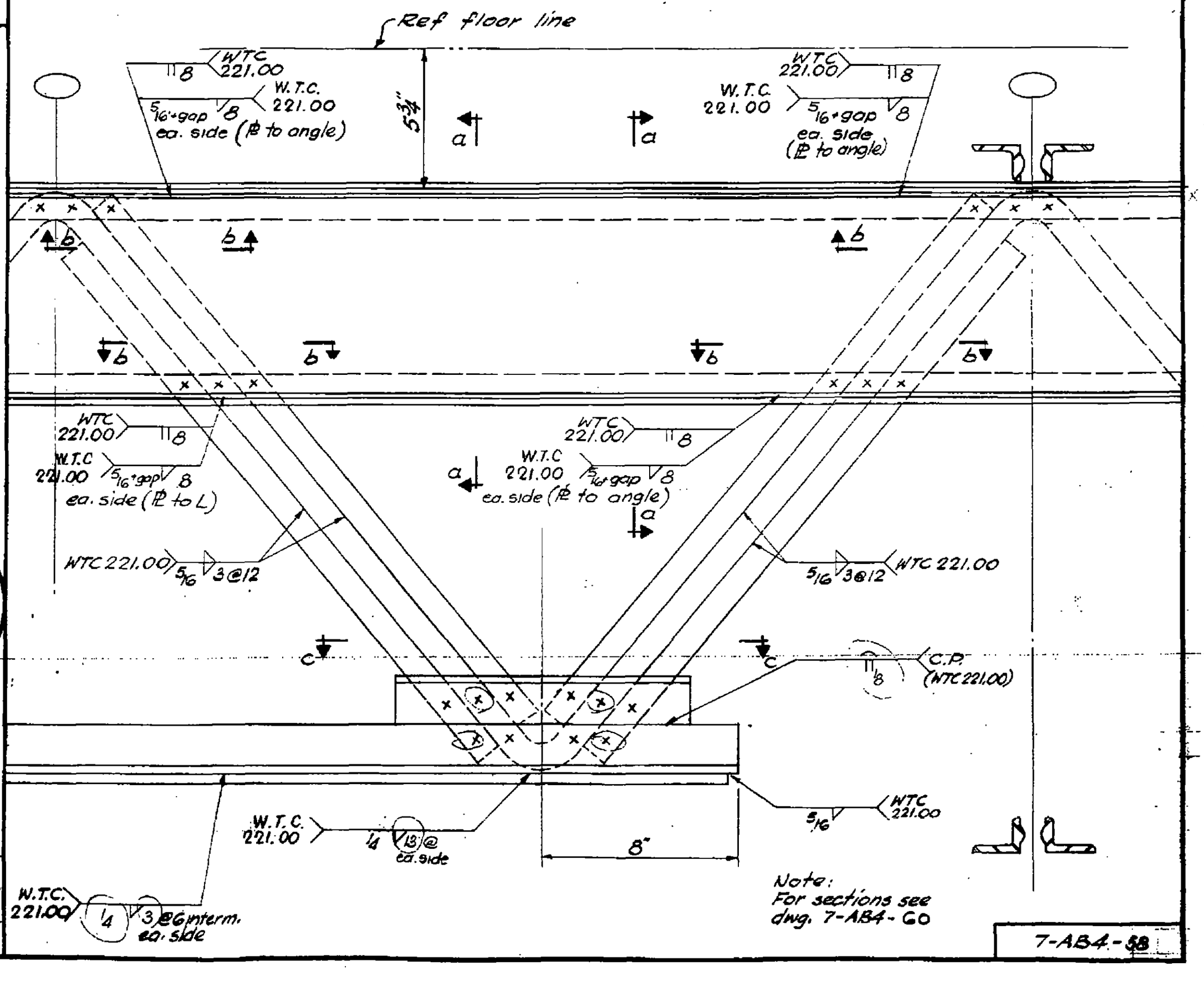

Note:
For sections see dwg. 7-AB4-60

LICENSED PROFESSIONAL ENGINEER — LESLIE E. ROBERTSON — No. 34960 — UNIVERSITY OF THE STATE OF NEW YORK

DESIGNED

DRAWN

REVIEWED

7-AB4-58

SKILLING, HELLE, CHRISTIANSEN, ROBERTSON — Structural & Civil Engineers

PROJECT: THE WORLD TRADE CENTER | TITLE: DETAIL E 76A, E 76B, E77 | DATE: 8-15-68

REVISIONS

10-4-68

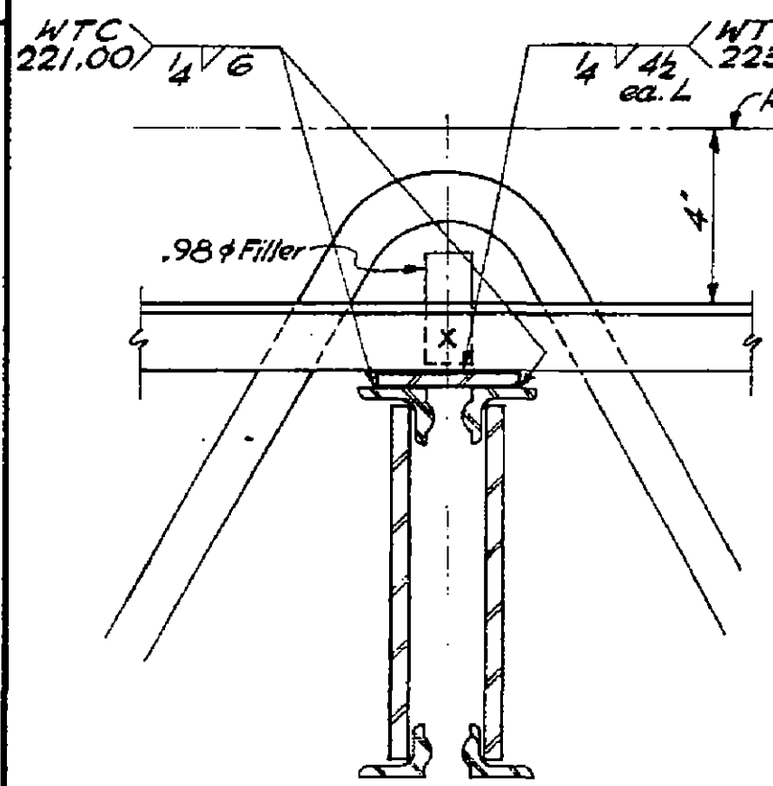

E 76A

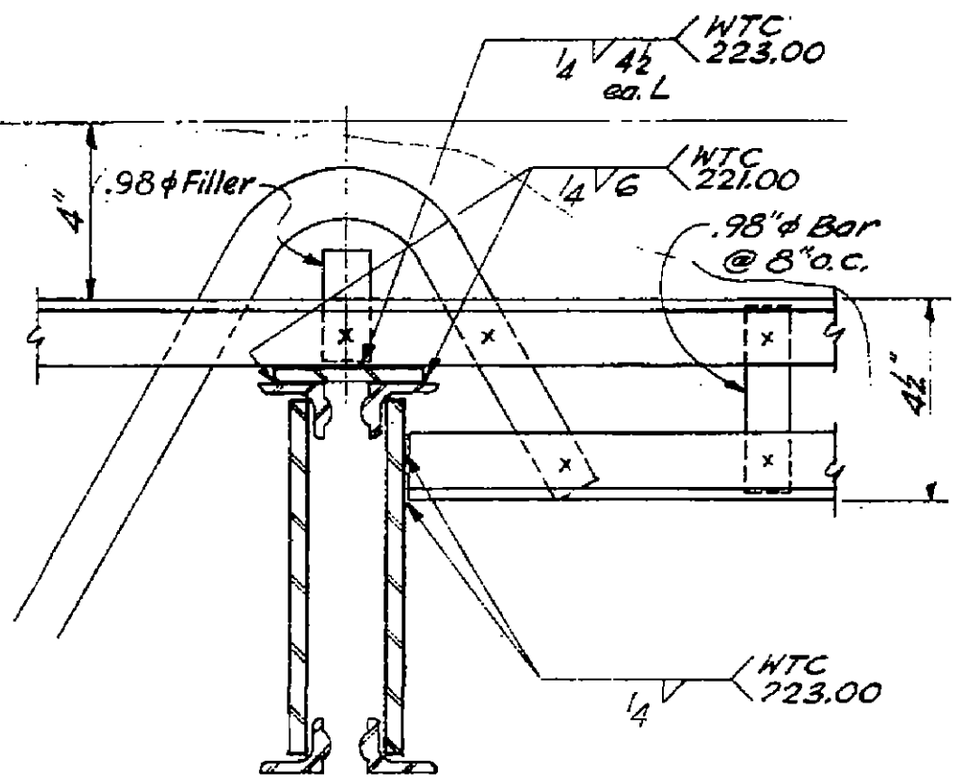

E 76B

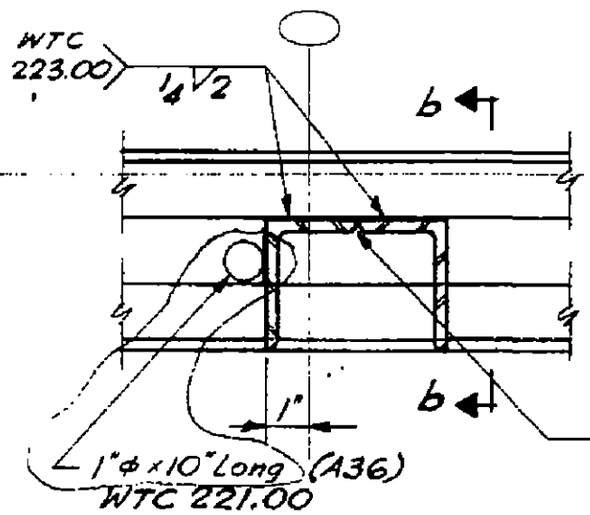

Section a-a

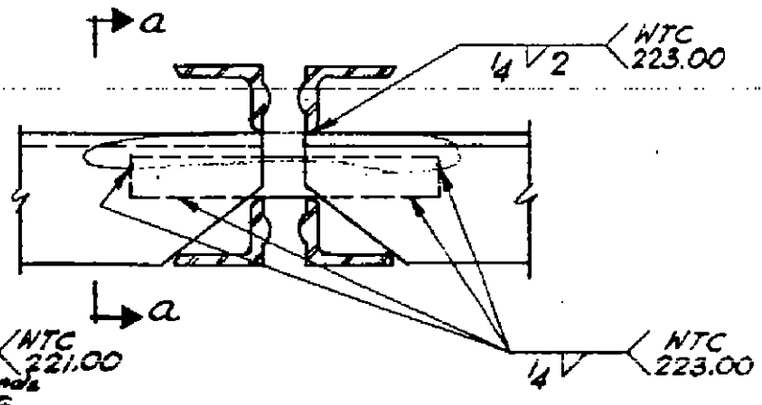

Section b-b

Detail E77

For plan see Det. E42 (7-AB4-23)

LICENSED PROFESSIONAL ENGINEER — LESLIE E. ROBERTSON — No. 34960 — UNIVERSITY OF THE STATE OF NEW YORK

DESIGNED

DRAWN

REVIEWED

7-AB4-59

SKILLING, HELLE, CHRISTIANSEN, ROBERTSON — Structural & Civil Engineers

PROJECT THE WORLD TRADE CENTER | TITLE FLOOR PANEL - DETAIL E76, E76A, E76B | DATE 8-15-68

REVISIONS

10-4-68
7-28-70

Note A: Add arc welding as reqd. to develop full strength of web bars.

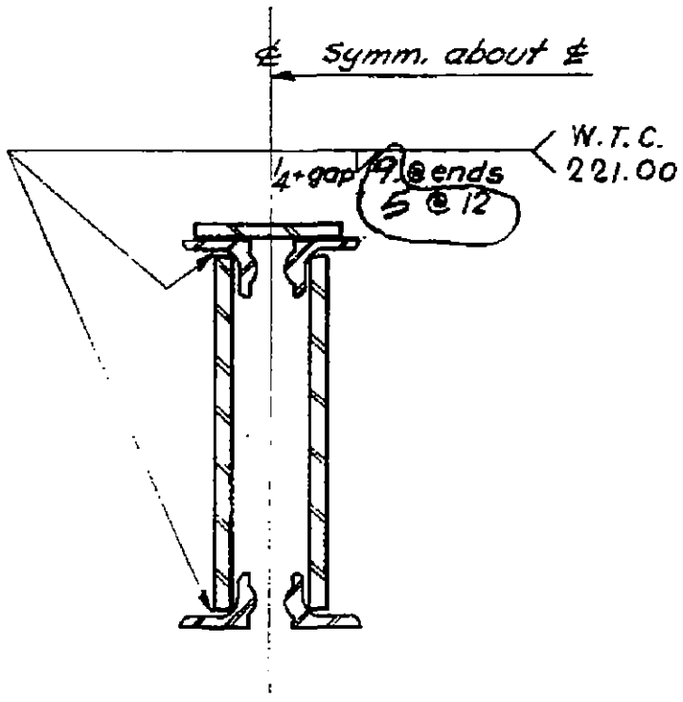

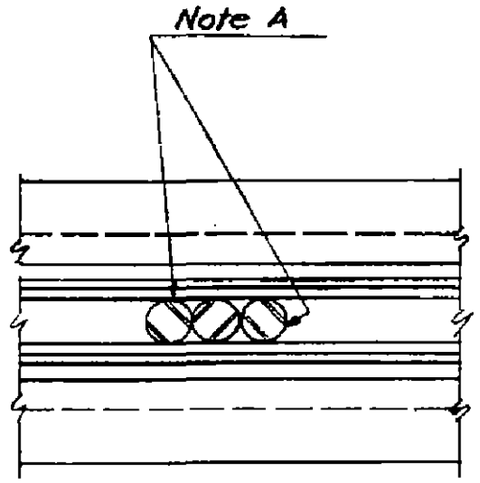

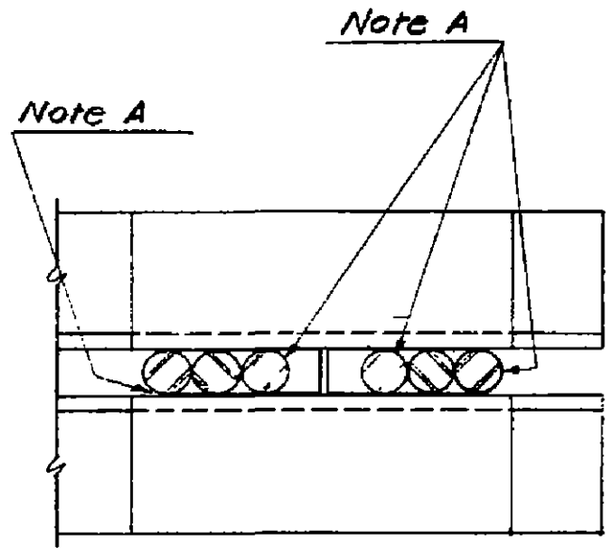

Section a-a

Note B: For additional J to L welding see detail E76-E76B

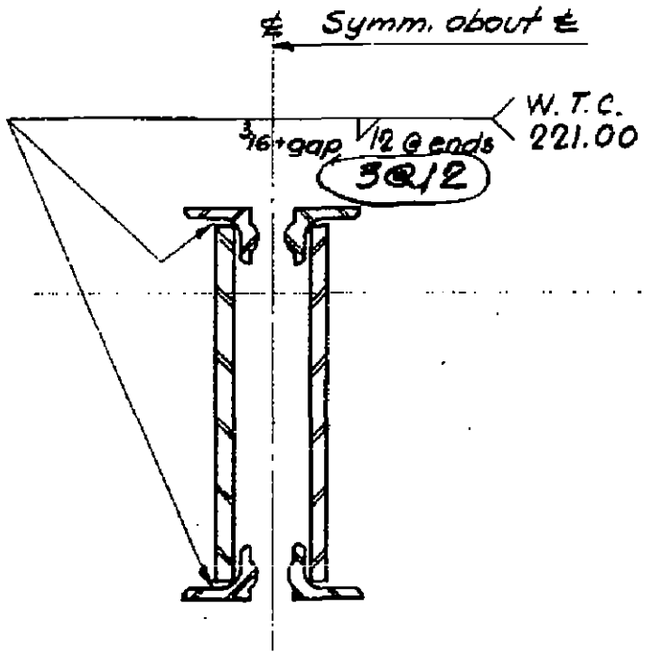

Section b-b

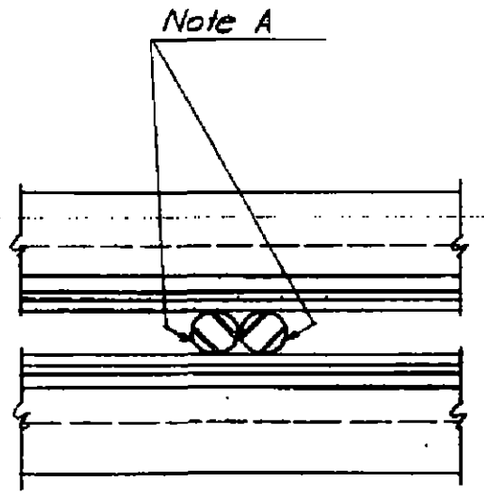

Section c-c

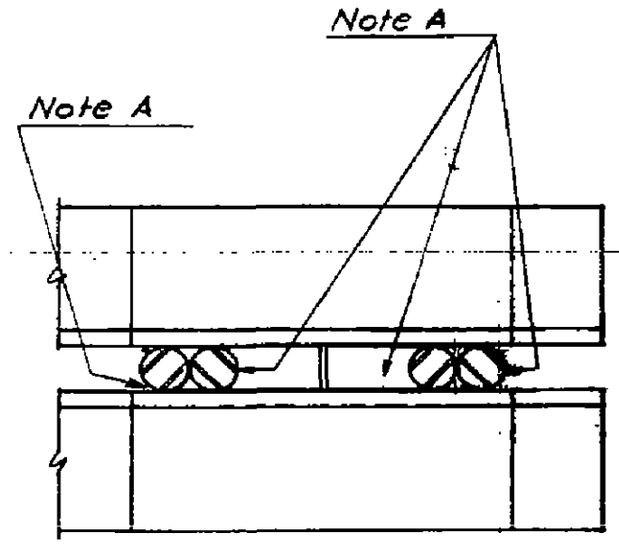

Section d-d

See Note B

Section e-e

Section f-f

LICENSED PROFESSIONAL ENGINEER — LESLIE E. ROBERTSON — No. 34360 — UNIVERSITY OF THE STATE OF NEW YORK

DESIGNED

DRAWN

REVIEWED

7-AB4-66

SKILLING, HELLE, CHRISTIANSEN, ROBERTSON — Structural & Civil Engineers

PROJECT THE WORLD TRADE CENTER | TITLE DETAIL E 77A | DATE 8-15-68

REVISIONS

10-4-68

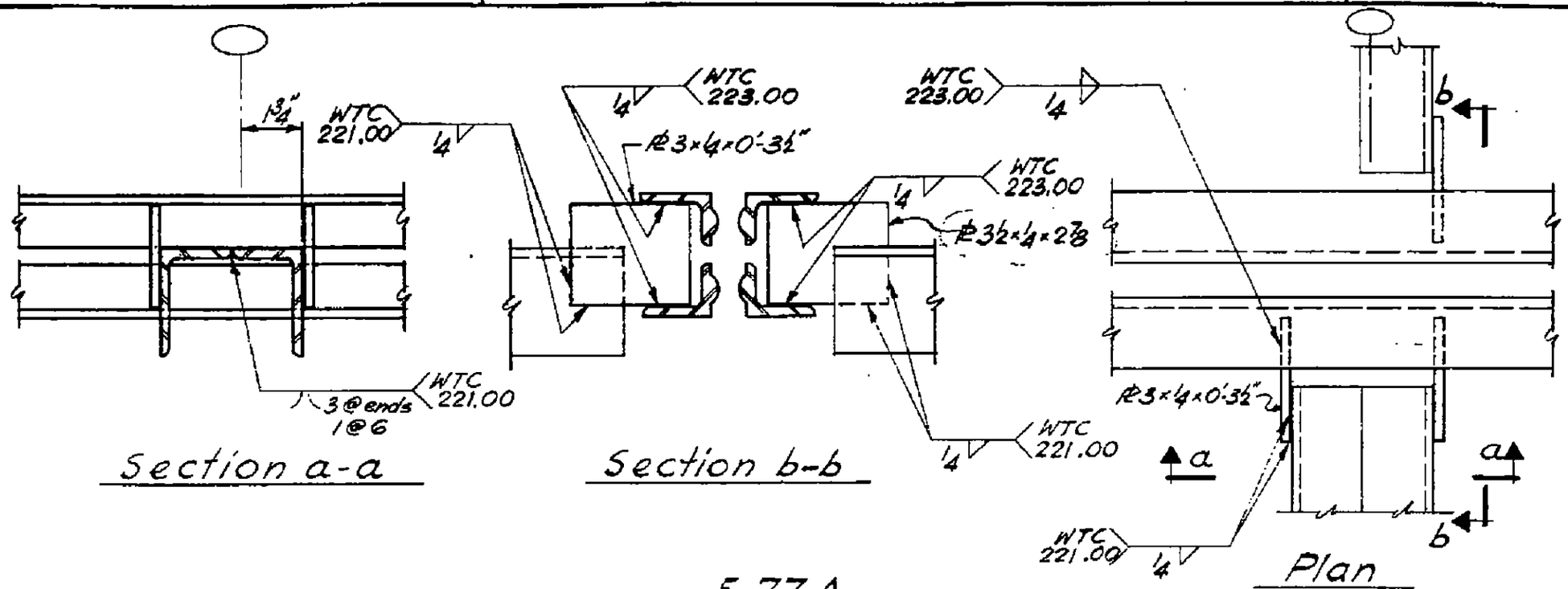

E 77A

LICENSED PROFESSIONAL ENGINEER
LESLIE E. ROBERTSON
No. 34360
REGISTERED IN THE STATE OF NEW YORK

DESIGNED

DRAWN

REVIEWED

7-AB4-61

SKILLING, HELLE, CHRISTIANSEN, ROBERTSON — Structural & Civil Engineers

PROJECT: THE WORLD TRADE CENTER | TITLE: FLOOR PANEL-DETAIL E78, E79 | DATE: 1-6-69

REVISIONS

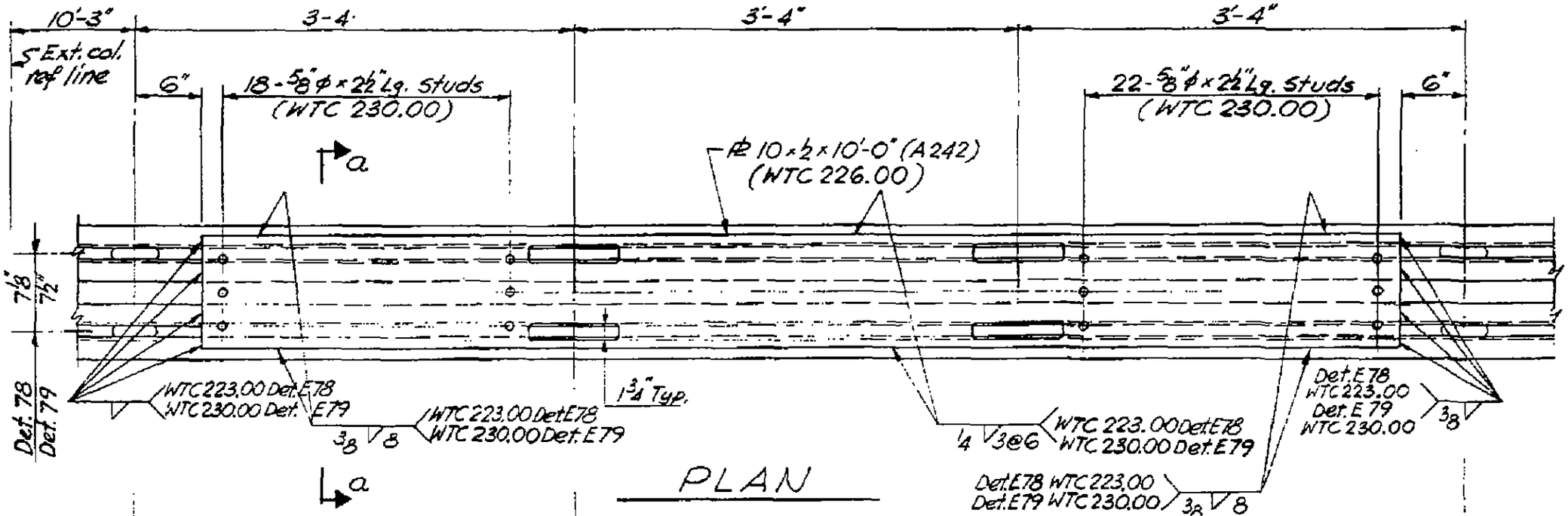

PLAN

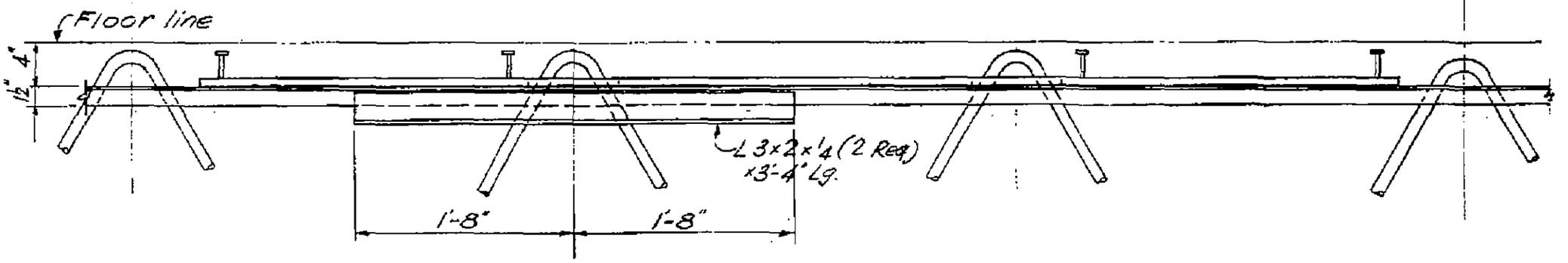

ELEVATION

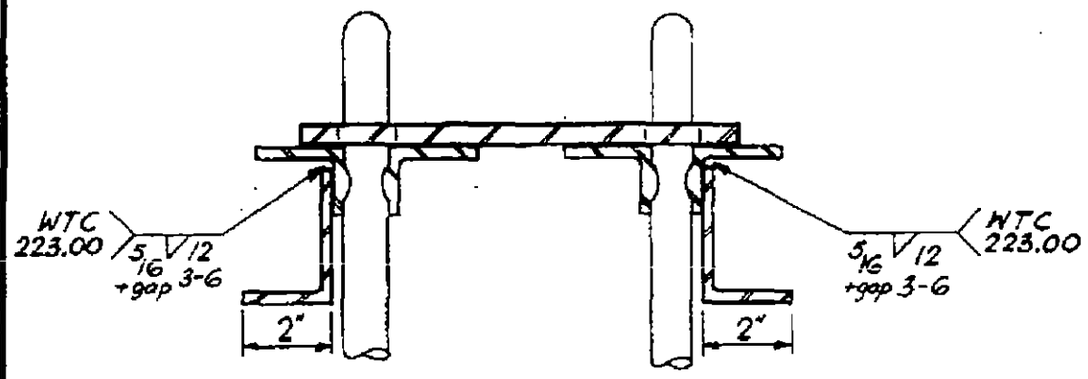

Section a-a

LICENSED PROFESSIONAL ENGINEER — LESLIE E. ROBERTSON — NO. 34360 — UNIVERSITY OF THE STATE OF NEW YORK

DESIGNED

DRAWN

REVIEWED

58

7-AB4-62

REVISIONS

Printed 5-1-69

7-AB5- 1 INDEX & GEN. NOTES
7-AB5- 2 TYPICAL DETAILS A-D
7-AB5- 3 TYPICAL DETAILS E-G
7-AB5- 3.1 TYPICAL DETAIL H
7-AB5- 3.2 TYPICAL DETAIL K
7-AB5- 4 POWER/TELEPHONE DETAILS
7-AB5- 4.1 POWER/TELEPHONE DETAILS
7-AB5- 5 SECTIONS A-D&DD
7-AB5- 6 SECTIONS E-H
7-AB5- 7 SECTIONS J-N
7-AB5- 8 SECTIONS P-T
7-AB5- 8.1 SECTIONS U-X
7-AB5- 8.2 SECTIONS Y,YY&Z
7-AB5- 9 DETAIL K
7-AB5-10 DETAIL M
7-AB5-11 DETAIL N
7-AB5-12 DETAIL P
7-AB5-13 DETAIL Q
7-AB5-14 DETAIL R
7-AB5-15 DETAIL S
7-AB5-16 SUPPORTS
7-AB5-17 DETAIL T
7-AB5-18 DETAIL U
7-AB5-19 DETAIL V&W

GENERAL NOTES.

1. STEEL DECK TO BE 22 GAGE GALV.

2. ALL PLUG WELDS SHALL BE FURNISHED UNDER CONTRACT WTC 223.00 OR CONTRACT WTC 230.00, WHICHEVER IS APPLICABLE.

SKILLING - HELLE - CHRISTIANSEN - ROBERTSON — Structural & Civil Engineers

PROJECT THE WORLD TRADE CENTER | TITLE STEEL DECK - TYPICAL DETAILS A-D | DATE 10-18-67

REVISIONS

11-24-67

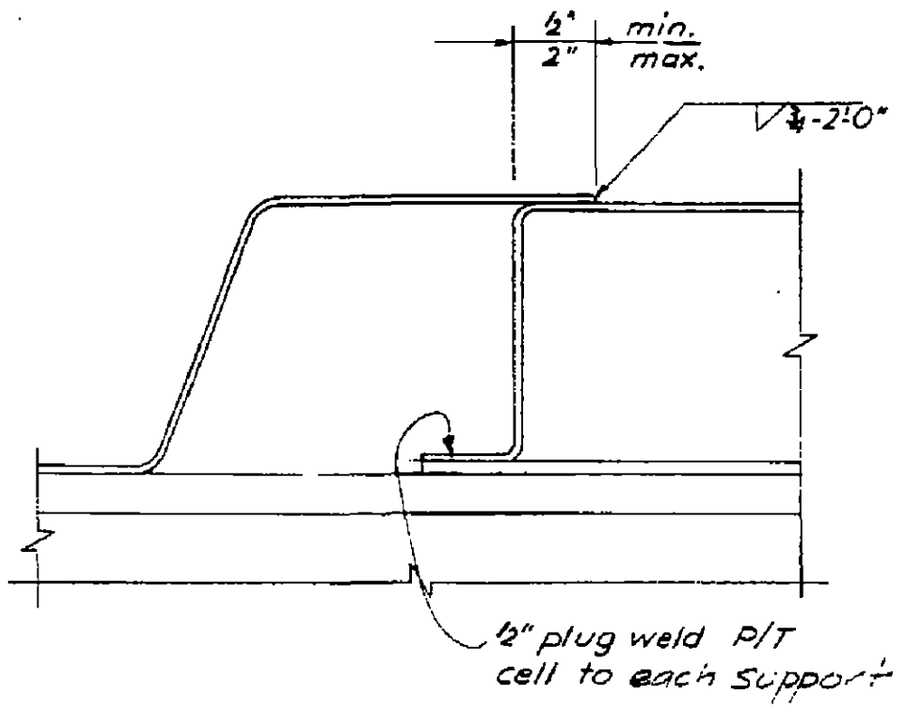

Detail A

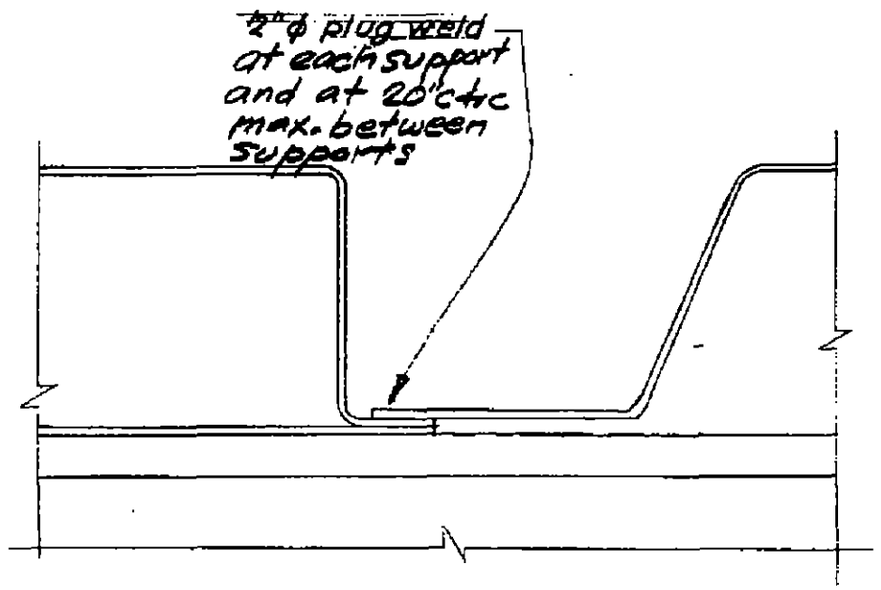

Power / telephone cell - see details 7-AB5-4

Detail B

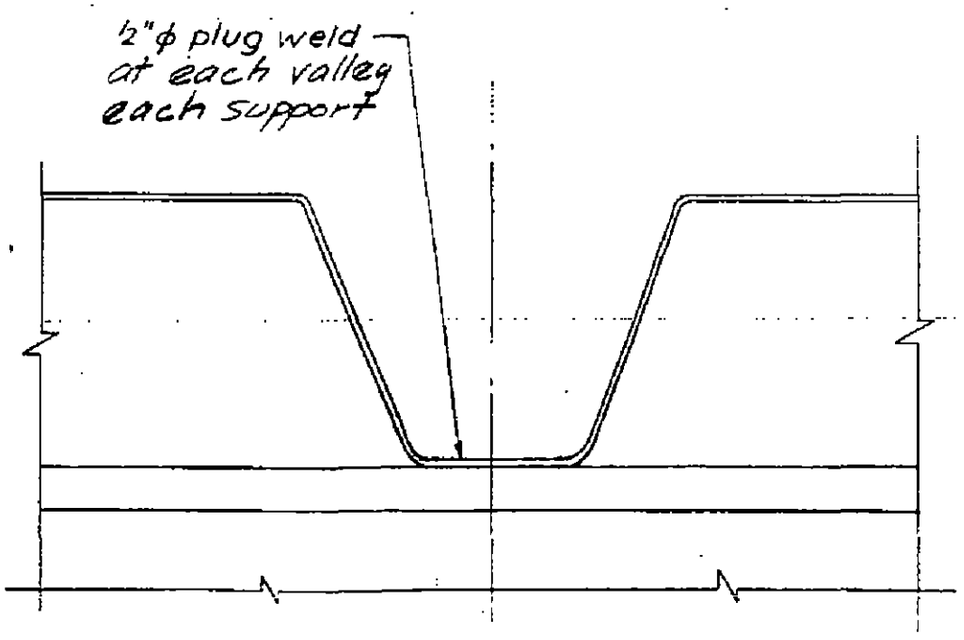

Detail C

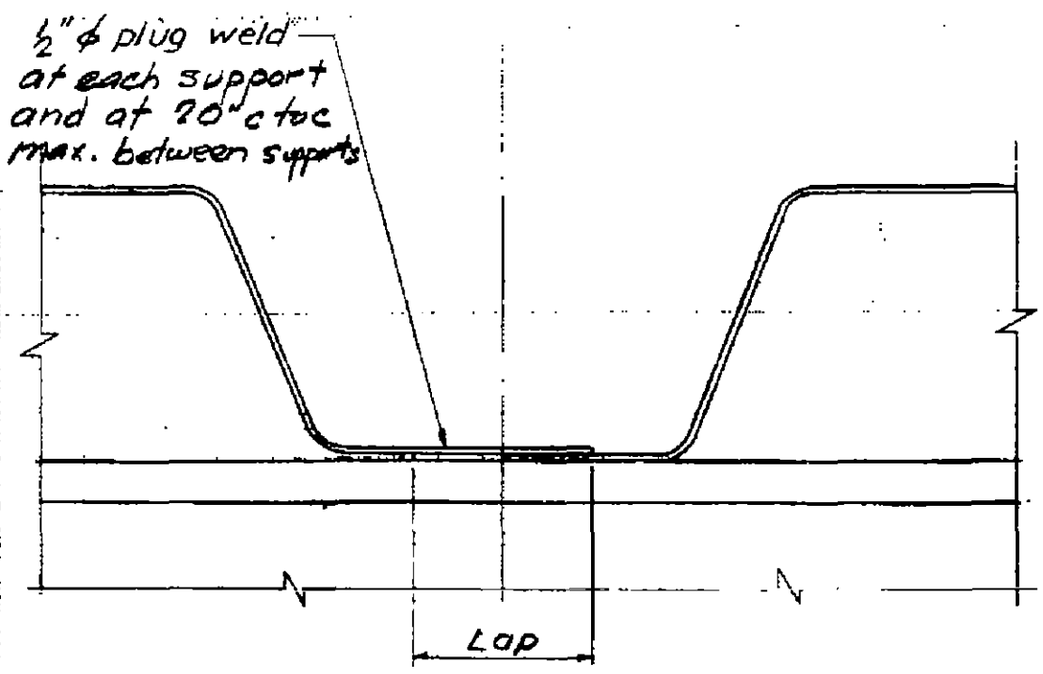

Detail D

7-AB5-2

LICENSED PROFESSIONAL ENGINEER LESLIE E. ROBERTSON No. 34360 UNIVERSITY OF THE STATE OF NEW YORK

10b R

SKILLING - HELLE - CHRISTIANSEN - ROBERTSON Structural & Civil Engineers

PROJECT THE WORLD TRADE CENTER | TITLE STEEL DECK - TYPICAL DETAILS E, F, G. | DATE 10-18-67

REVISIONS

11-24-67
4-1-68
6-17-68

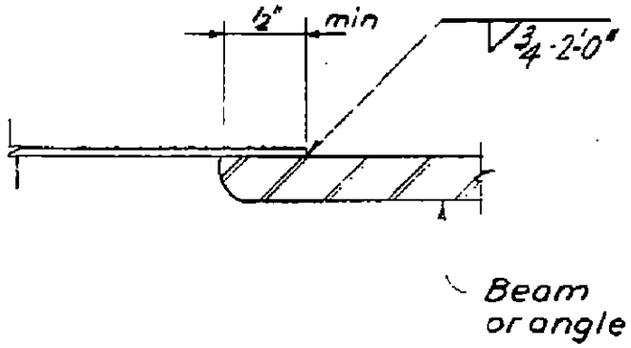

Detail E

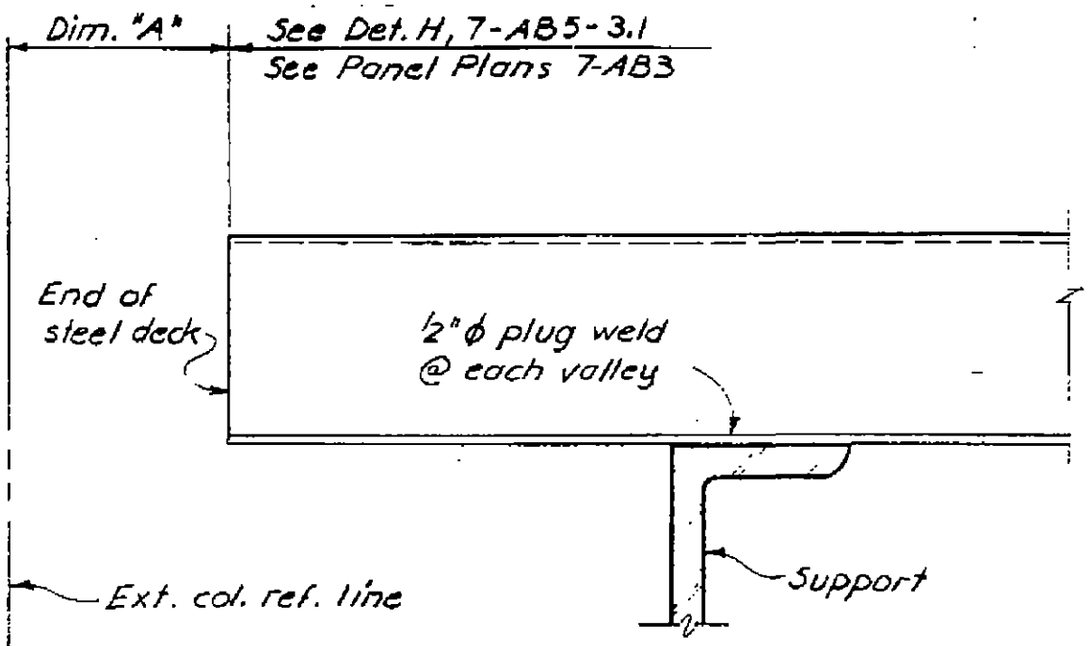

Detail G

(For prefabricated floor panels only)

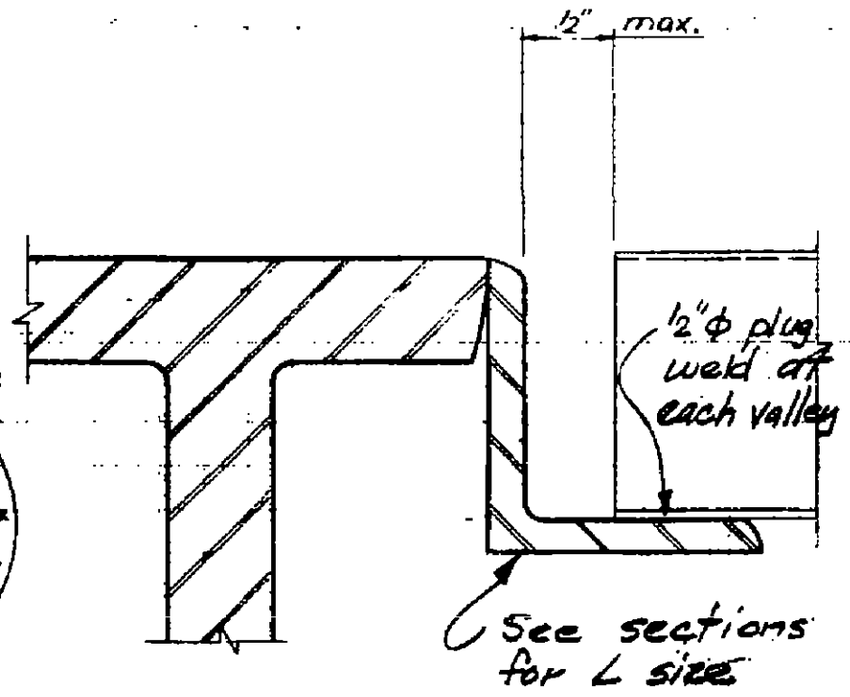

Detail F

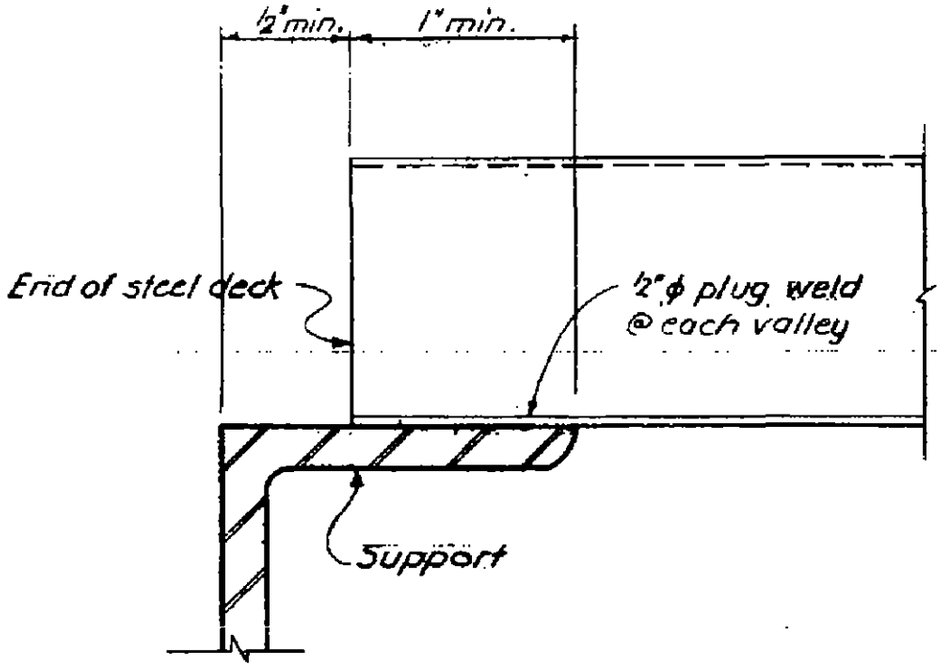

Detail G

(For field installed steel deck only)

LICENSED PROFESSIONAL ENGINEER
LESLIE E. ROBERTSON
No. 34360
UNIVERSITY OF THE STATE OF NEW YORK

7-AB5-3

R

SKILLING - HELLE - CHRISTIANSEN - ROBERTSON Structural & Civil Engineers

PROJECT THE WORLD TRADE CENTER | TITLE STEEL DECK - TYPICAL DETAIL H | DATE 10-18-67

REVISIONS
11-24-67
4-1-68
6-17-68

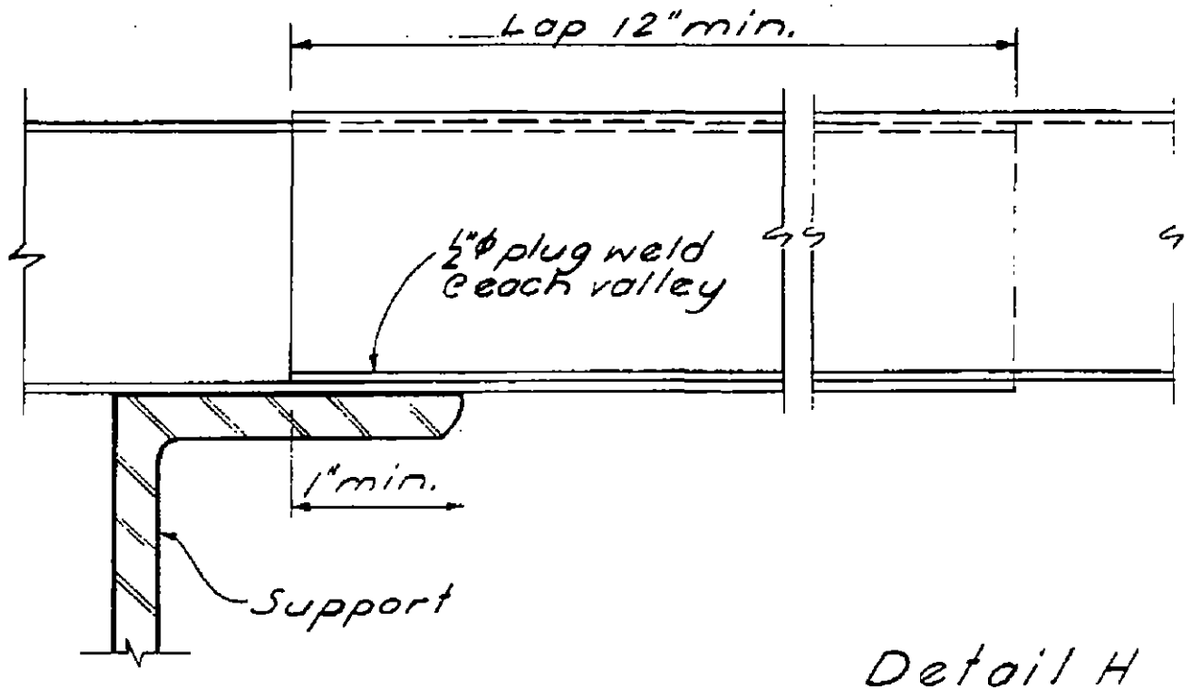

Detail H
(For field installed steel deck only)

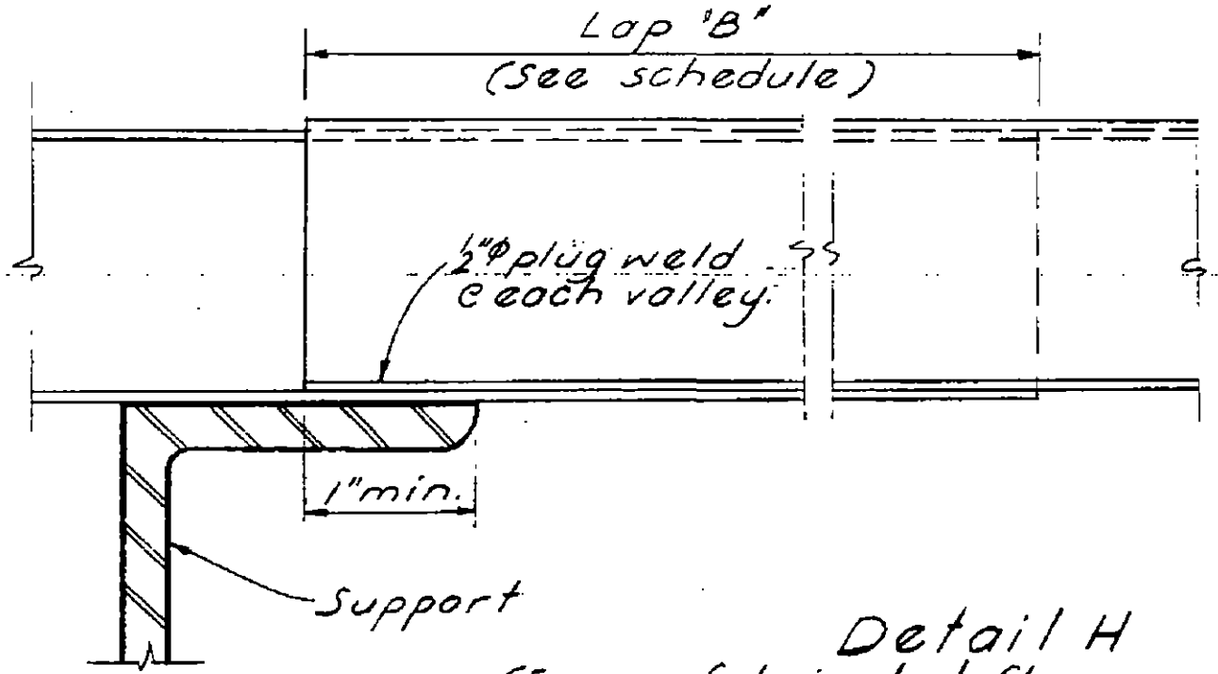

Schedule	
Dim "A"	Lap "B"
8½"	10"
9"	10½"
10½"	12"
11½"	11"
1'-0½"	12"
2'-3"	12"

Note: Dim. "A" is shown on Det. G 7-AB5-3.

Detail H
(For prefabricated floor panels only)

LICENSED PROFESSIONAL ENGINEER
LESLIE E. ROBERTSON
No. 34360
UNIVERSITY OF THE STATE OF NEW YORK

7-AB5-3.1

SKILLING - HELLE - CHRISTIANSEN - ROBERTSON Structural & Civil Engineers

PROJECT THE WORLD TRADE CENTER | TITLE STEEL DECK - TYPICAL DETAIL K. | DATE 6-17-68

REVISIONS

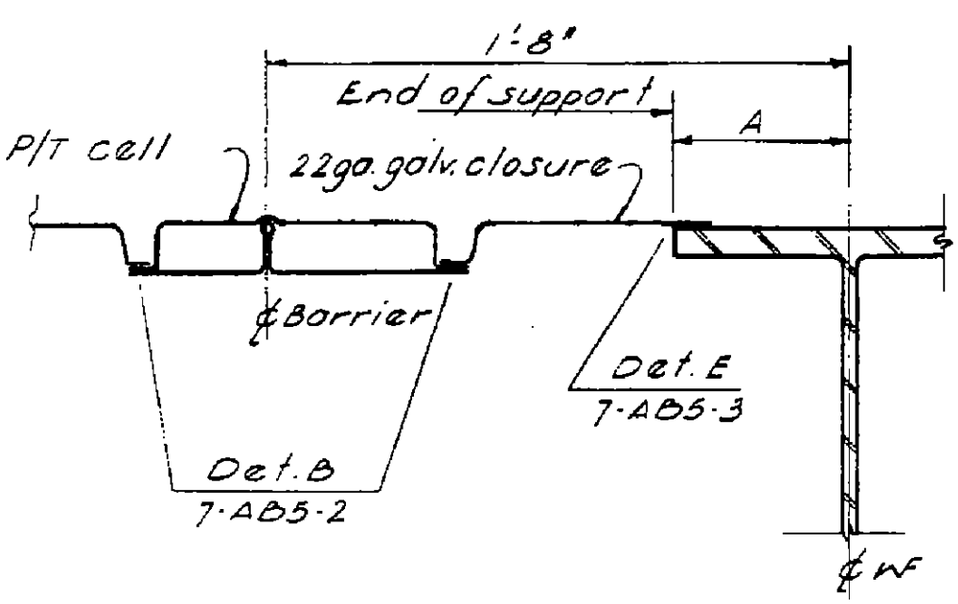

When A ≥ 5"

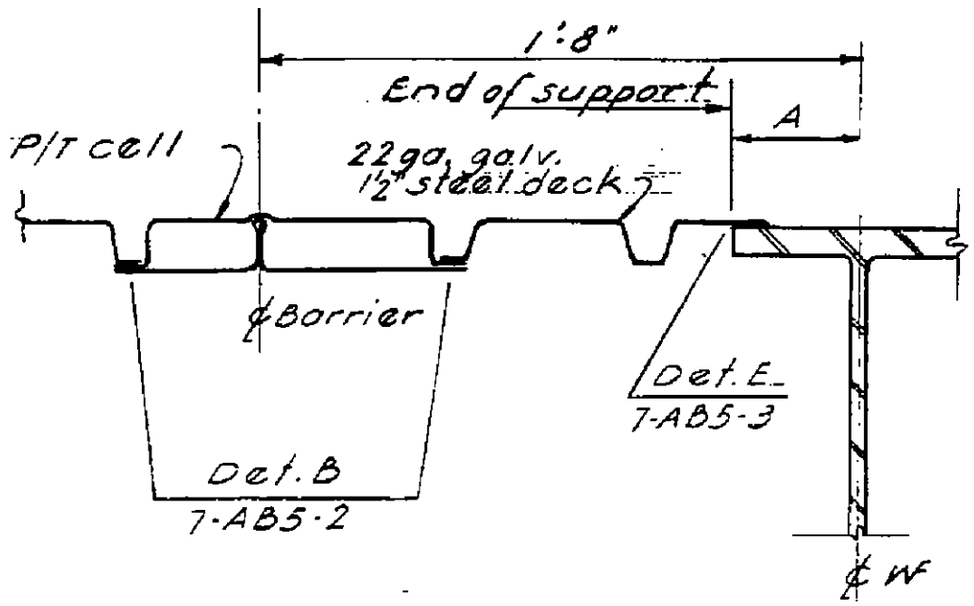

When A < 5"

Detail K

(Applies outside of core area only)

LICENSED PROFESSIONAL ENGINEER
LESLIE E. ROBERTSON
No. 34360
UNIVERSITY OF THE STATE OF NEW YORK

7-AB5-3.2

SKILLING - HELLE - CHRISTIANSEN - ROBERTSON Structural & Civil Engineers

PROJECT THE WORLD TRADE CENTER | TITLE STEEL DECK - POWER TELEPHONE CELL DETAILS | DATE 10-18-67

REVISIONS

11-2467
6-17-68
10-11-68

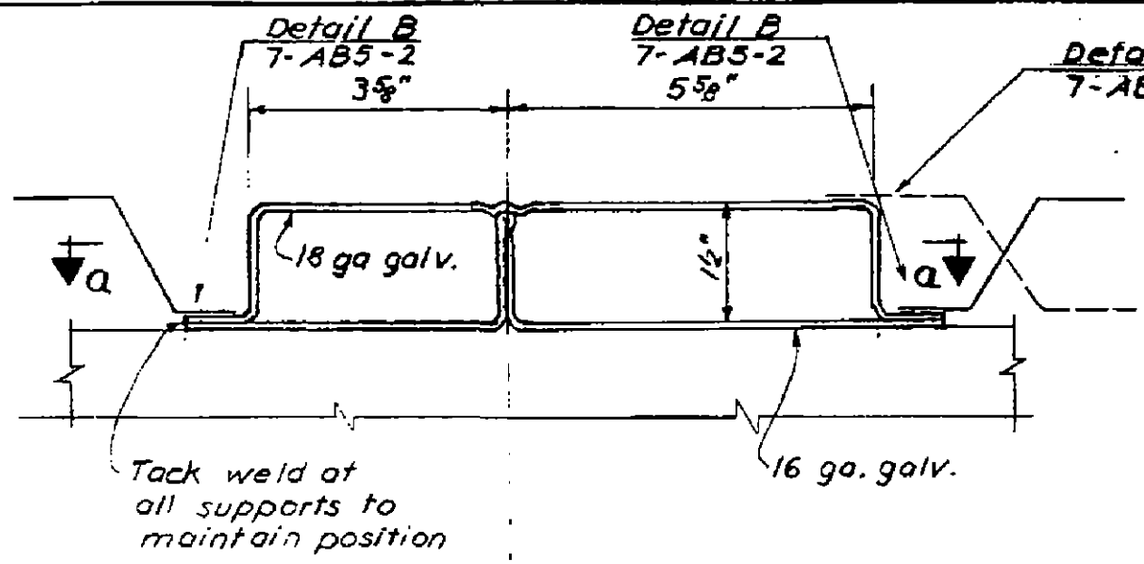

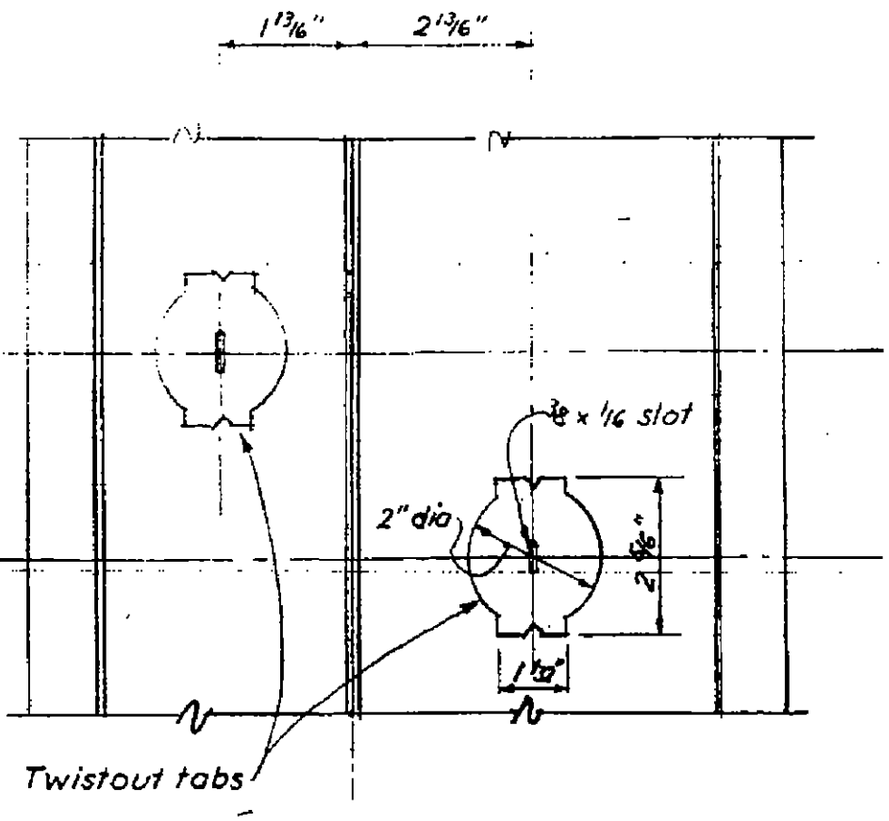

Plan - Section a-a

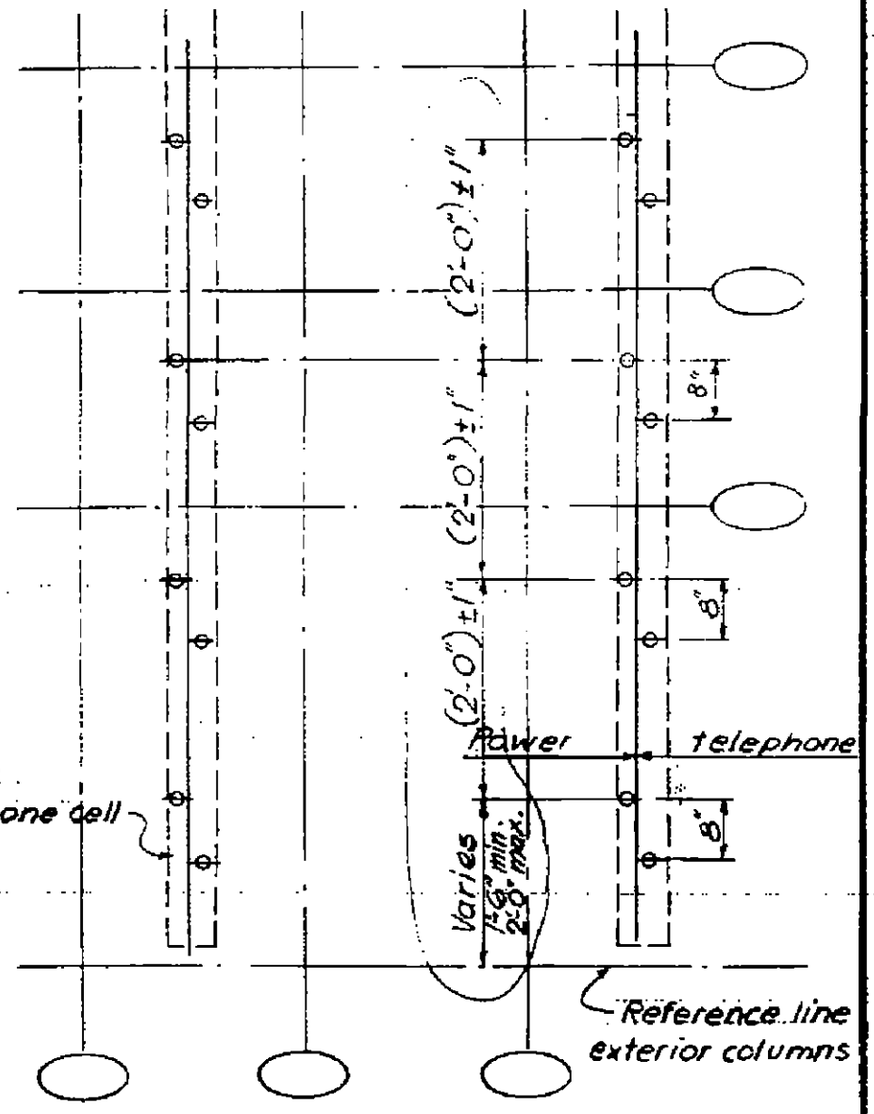

Part plan showing typical location of twistout in cells

LICENSED PROFESSIONAL ENGINEER
LESLIE E. ROBERTSON
No. 34360
UNIVERSITY OF THE STATE OF NEW YORK

7-AB5-4

105

SKILLING - HELLE - CHRISTIANSEN - ROBERTSON Structural & Civil Engineers

PROJECT THE WORLD TRADE CENTER | TITLE STEEL DECK POWER/TELEPHONE CELL DETAILS | DATE 10-18-67

REVISIONS

Det. A or B
7-AB5-2

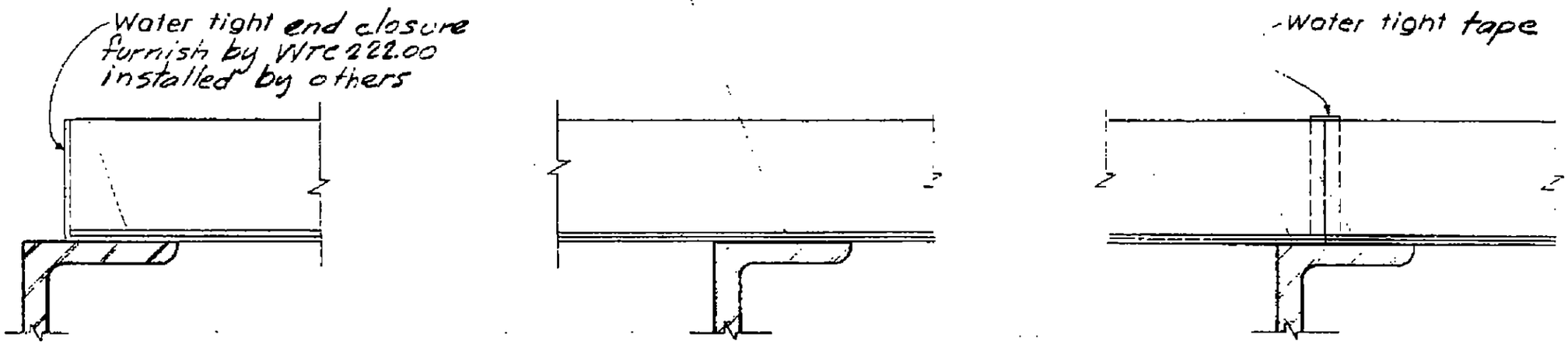

DETAIL AT END SUPPORT

DETAIL AT INTERIOR SUPPORT

DETAIL AT SPLICE

LICENSED PROFESSIONAL ENGINEER
LESLIE E. ROBERTSON
No. 34360
UNIVERSITY OF THE STATE OF NEW YORK

7-AB5-4.1

SKILLING - HELLE - CHRISTIANSEN - ROBERTSON Structural & Civil Engineers

PROJECT THE WORLD TRADE CENTER | TITLE STEEL DECK SECTIONS A - D & DD | DATE 10-18-67

REVISIONS

11-24-67
6-17-68

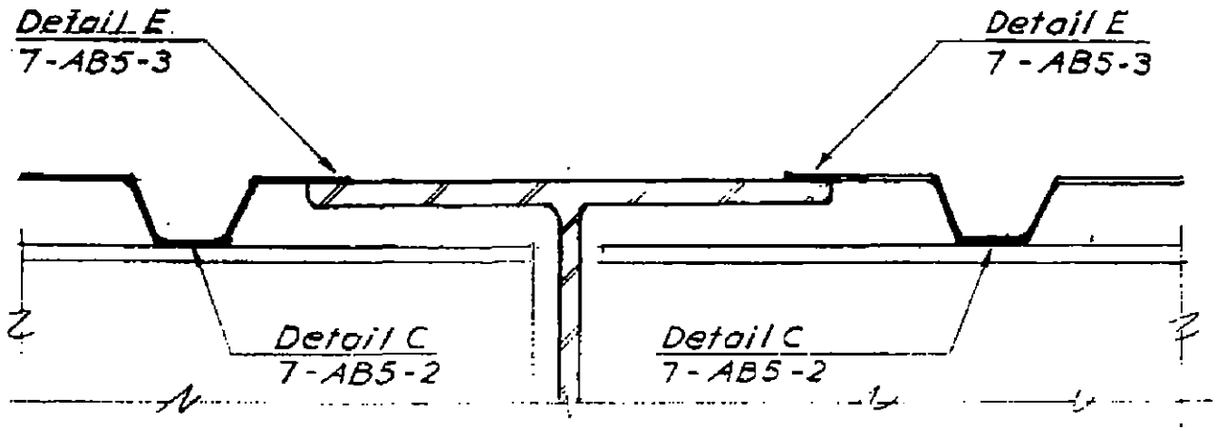

Section A-A
(See also typical Det. K-7-AB5-3.2)
for outside of core area only

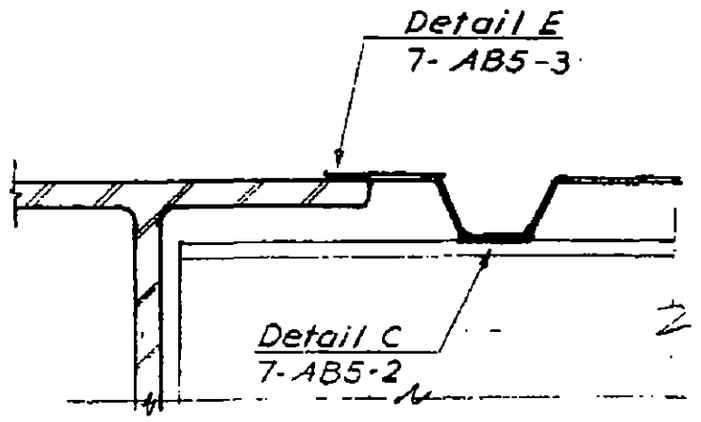

Section B-B
(See also typ. Det. K-7-AB5-3.2)
for outside of core area only

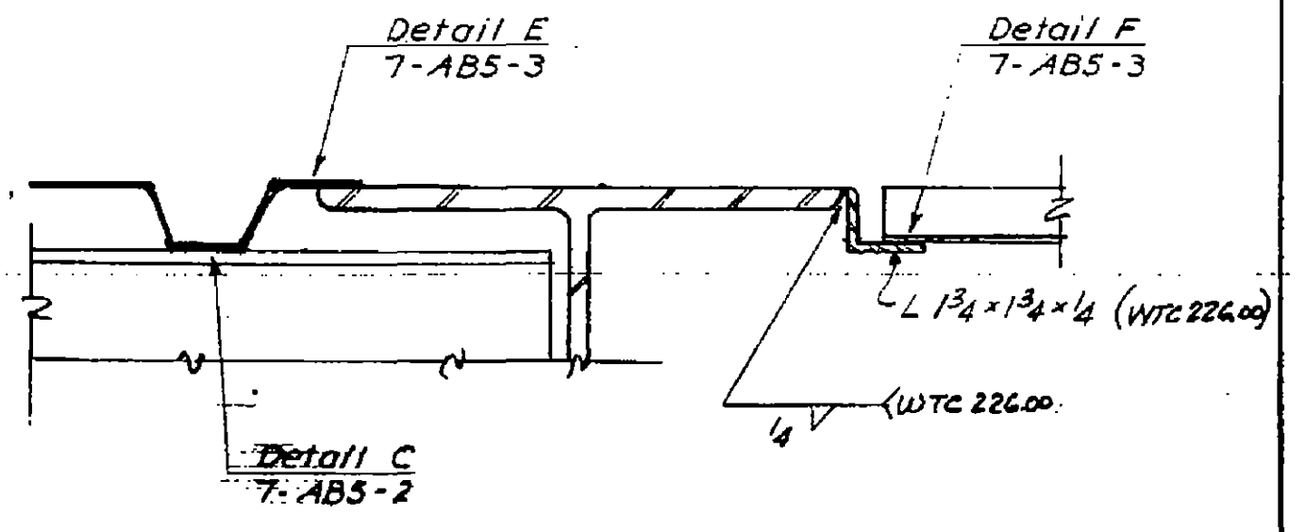

Section C-C
(See also typ. Det. K-7-AB5-3.2)
for outside of core area only

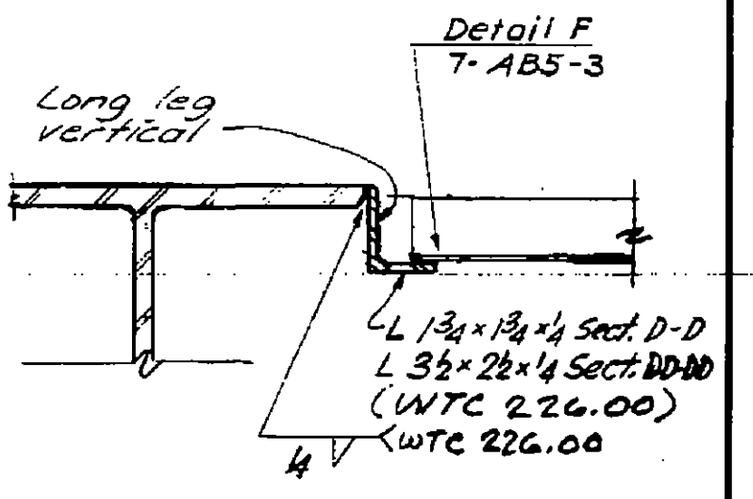

Section D-D
Section DD-DD

LICENSED PROFESSIONAL ENGINEER
LESLIE E. ROBERTSON
No. 34960
UNIVERSITY OF THE STATE OF NEW YORK

7-AB5-5

10-5

SKILLING - HELLE - CHRISTIANSEN - ROBERTSON Structural & Civil Engineers

PROJECT THE WORLD TRADE CENTER | TITLE STEEL DECK SECTIONS | DATE 10-18-67

REVISIONS
7-6-67
11-24-67
6-17-68

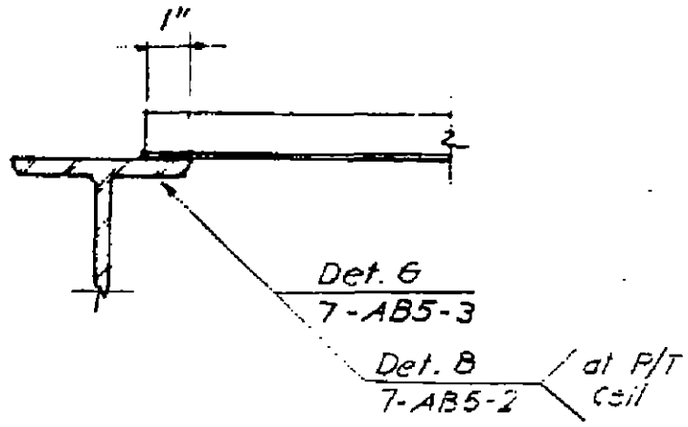

Section E-E
Section E'-E' (Opp. hand)

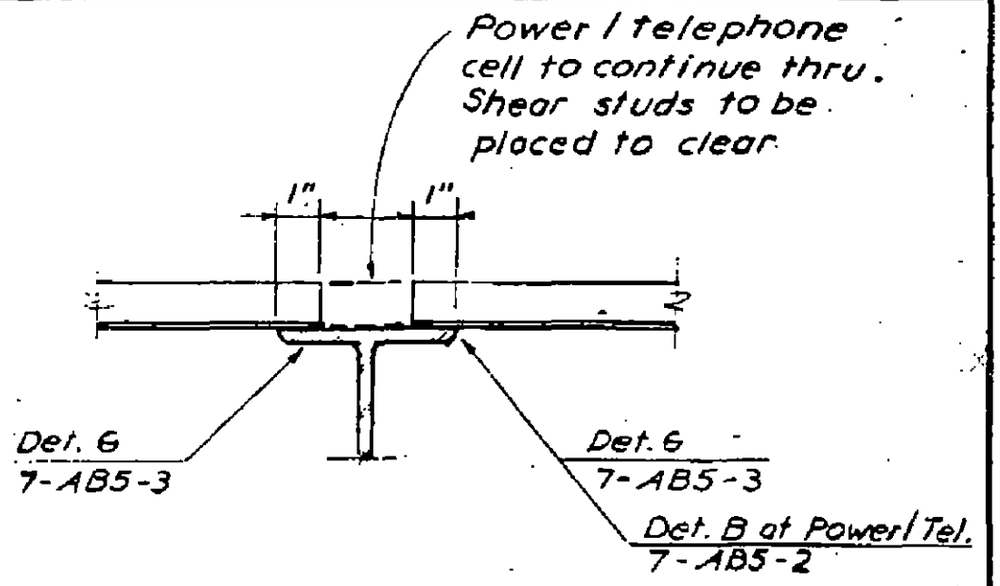

Section F-F

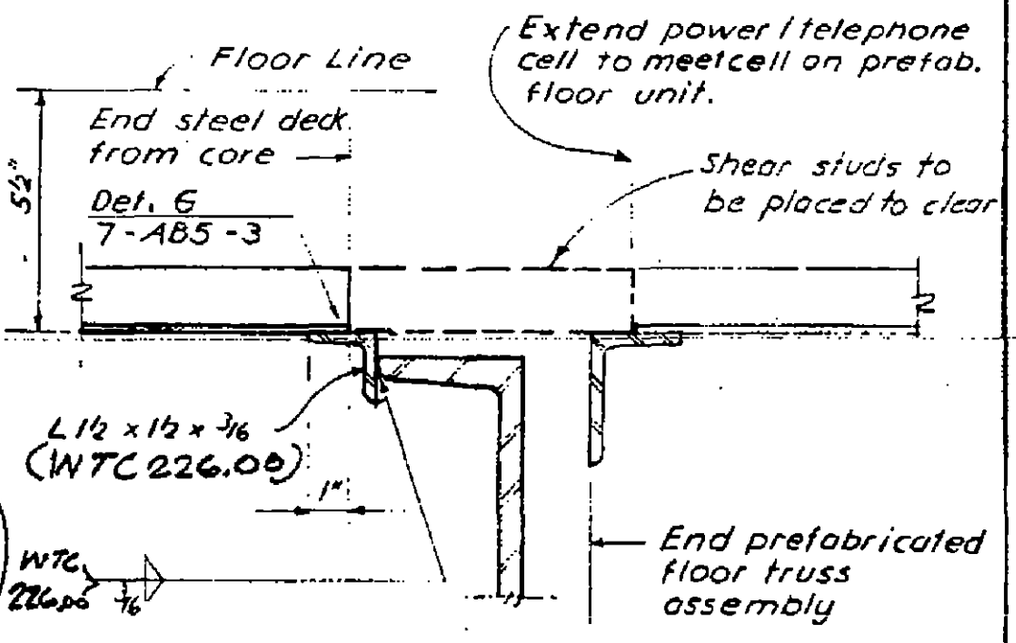

Section 6-6
Section G'-G' (Opp. hand)

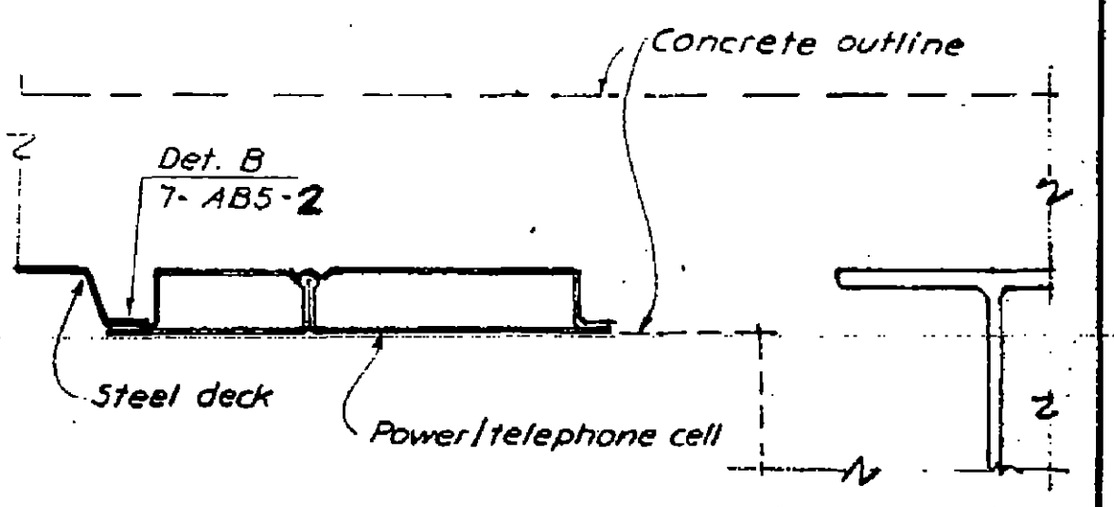

Section H-H

LICENSED PROFESSIONAL ENGINEER
LESLIE E. ROBERTSON
No. 34360
UNIVERSITY OF THE STATE OF NEW YORK

7-AB5-6

SKILLING - HELLE - CHRISTIANSEN - ROBERTSON — Structural & Civil Engineers

PROJECT THE WORLD TRADE CENTER | TITLE STEEL DECK - SECTIONS J-N | DATE 11-6-67

REVISIONS

6-17-68

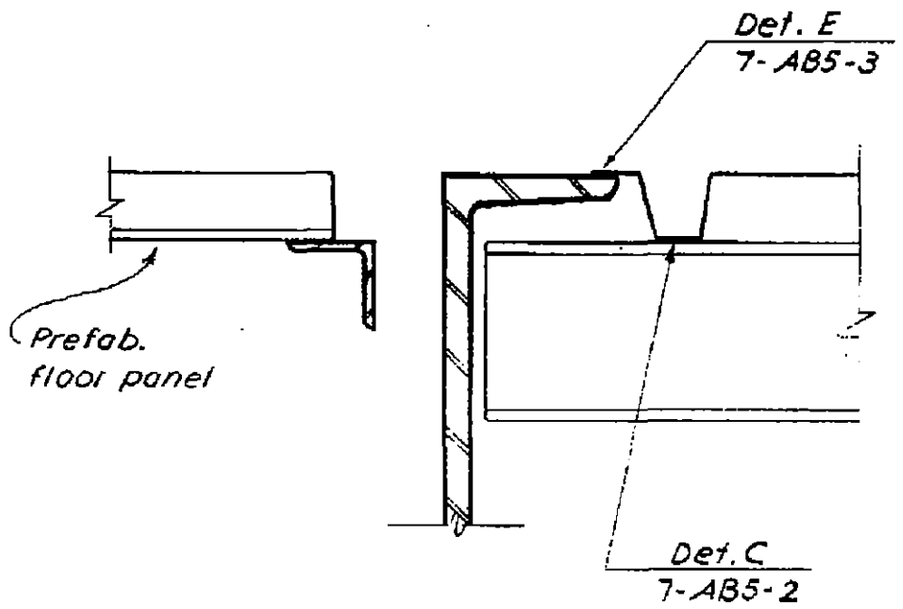

Section J-J

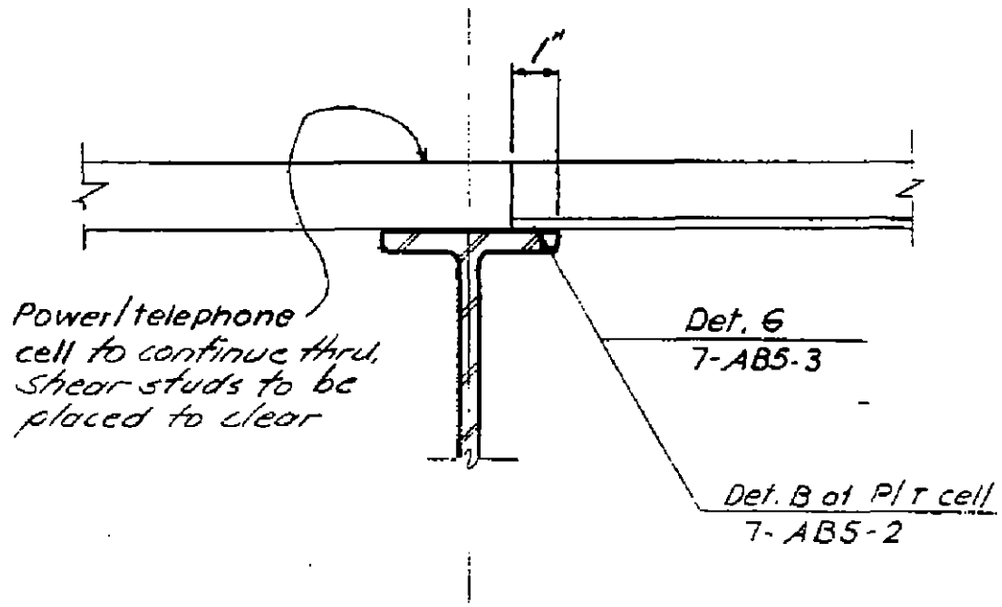

Section K-K

Section K'-K' opp. hand

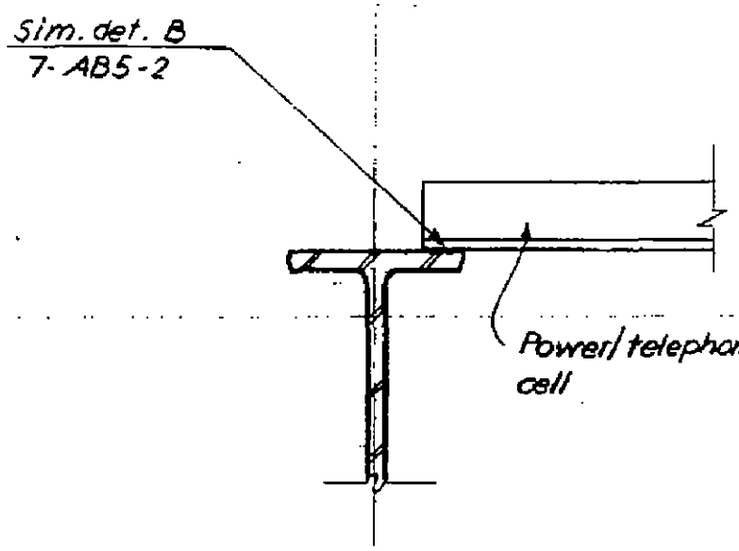

Section M-M

Section M'-M' opp. hand

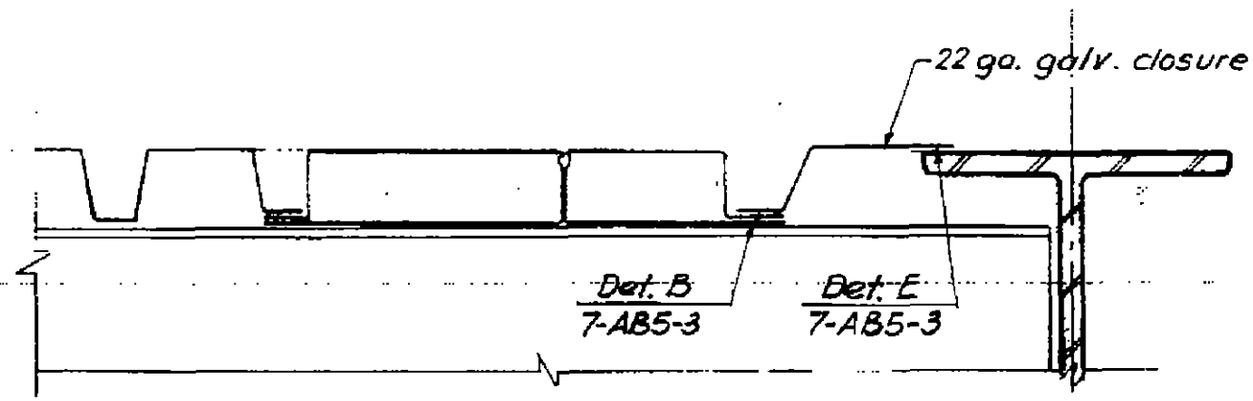

Section N-N

LICENSED PROFESSIONAL ENGINEER
LESLIE E. ROBERTSON
No. 34360
UNIVERSITY OF THE STATE OF NEW YORK

7-AB5-7

110

SKILLING - HELLE - CHRISTIANSEN - ROBERTSON Structural & Civil Engineers

PROJECT THE WORLD TRADE CENTER | TITLE STEEL DECK - SECTIONS P - T | DATE 11-6-67

REVISIONS

11-24-67
6-17-68

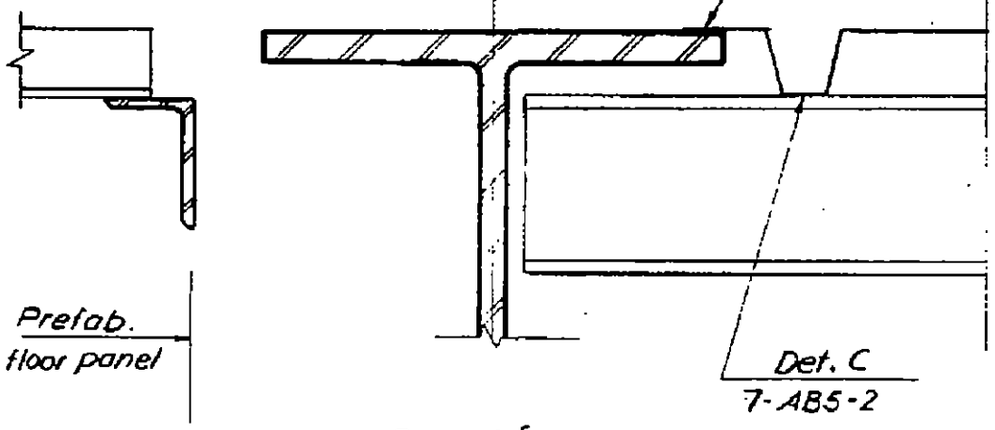

Section P-P
(See also typ. Det. K-7-AB5-3.2)

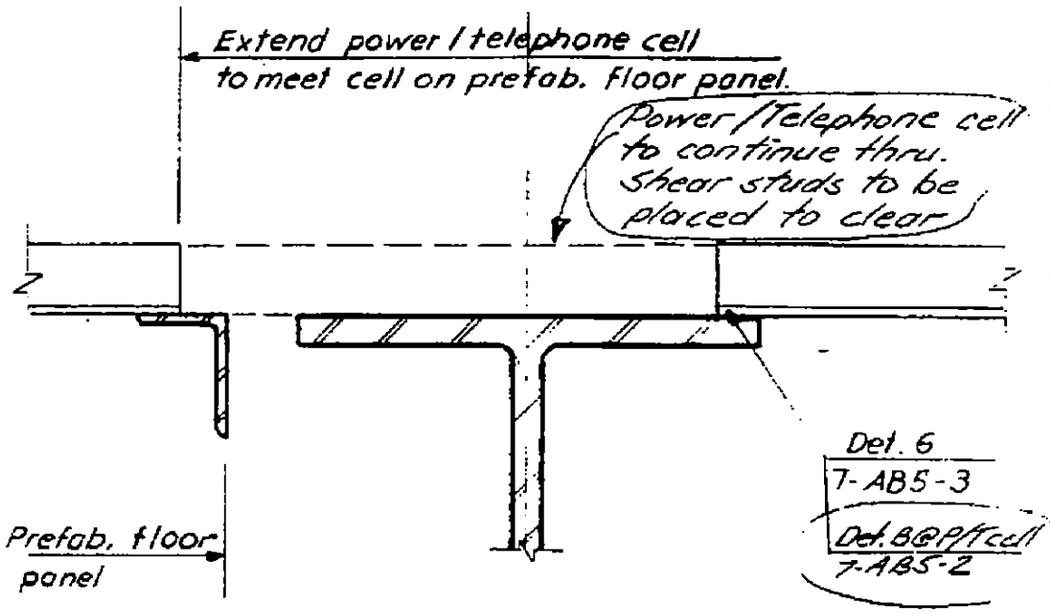

Section Q-Q

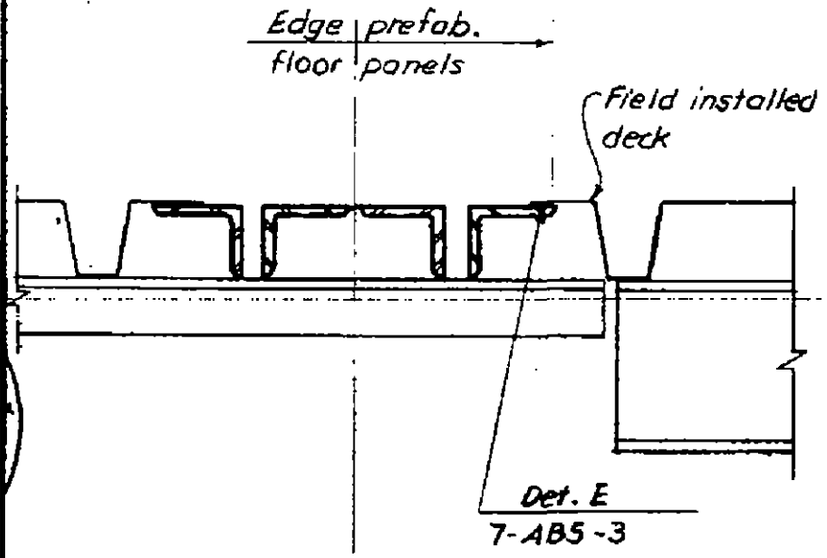

Section R-R
(See also typ. Det. K-7-AB5-3.2)

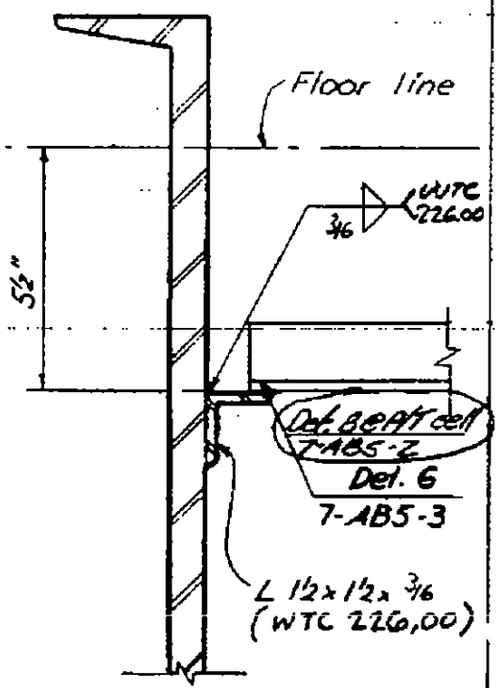

Section S-S

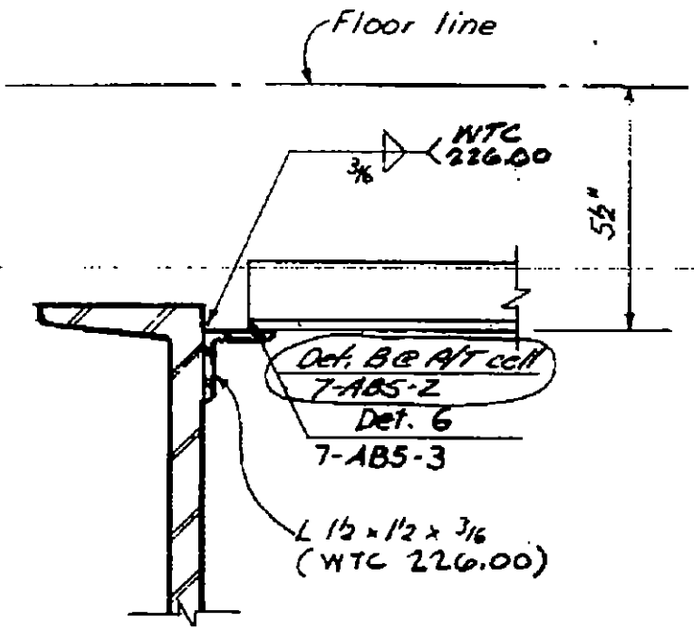

Section T-T

LESLIE E. ROBERTSON
REGISTERED PROFESSIONAL ENGINEER
No. 34360
UNIVERSITY OF THE STATE OF NEW YORK

7-AB5-8

111

SKILLING - HELLE - CHRISTIANSEN - ROBERTSON Structural & Civil Engineers

PROJECT THE WORLD TRADE CENTER | TITLE STEEL DECK - SECTIONS U-X | DATE 11-6-67

REVISIONS

11-24-67
6-17-68

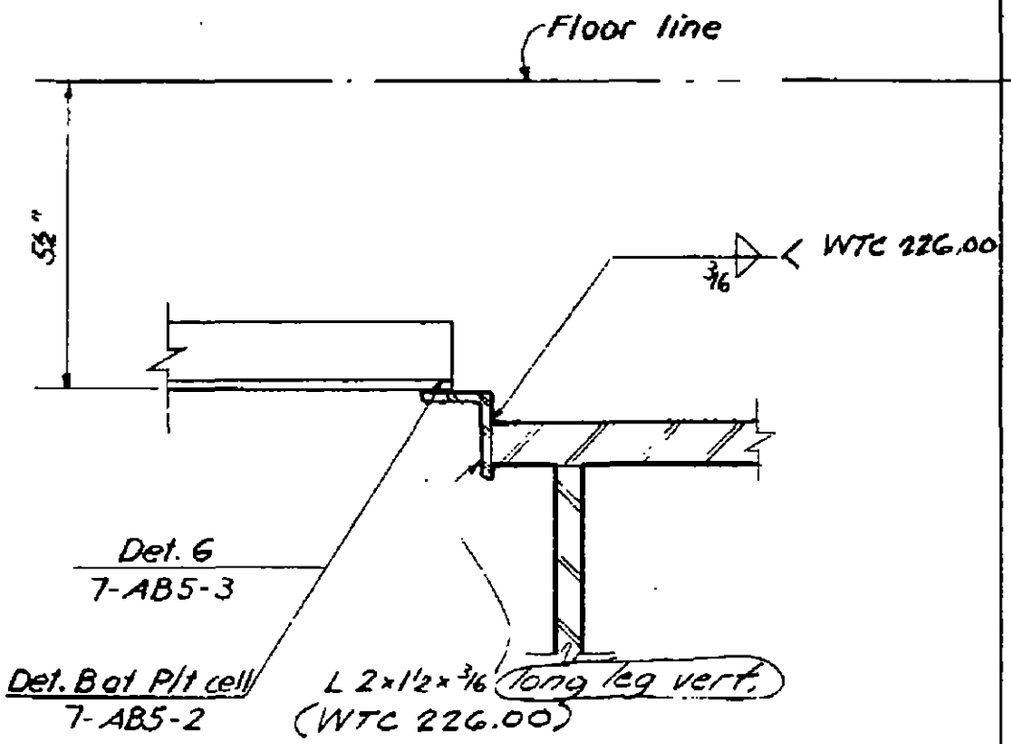

Section U-U

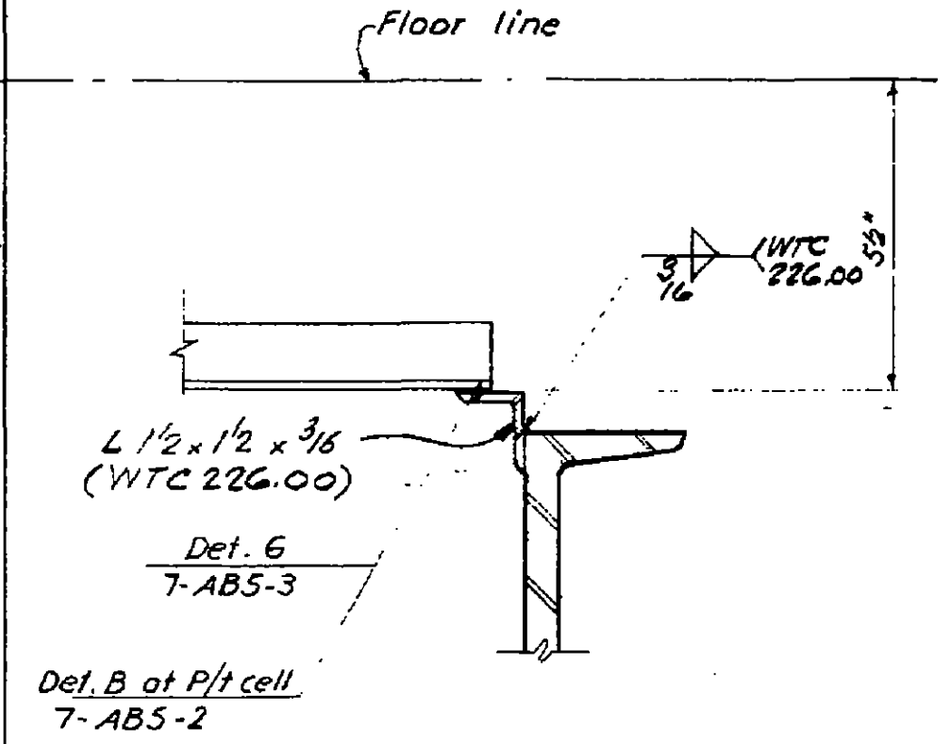

Section V-V

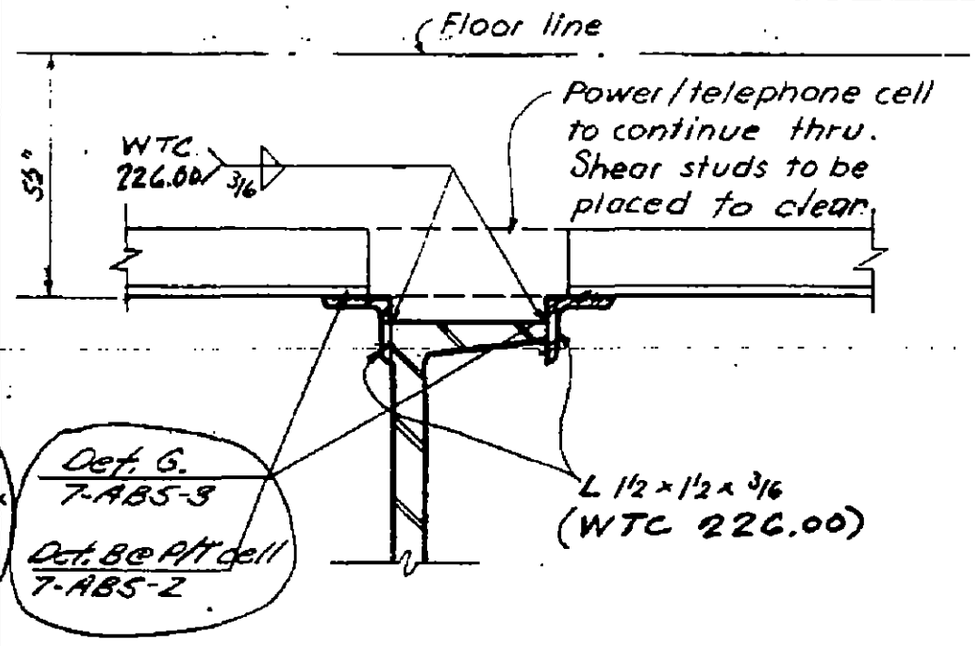

Section W-W

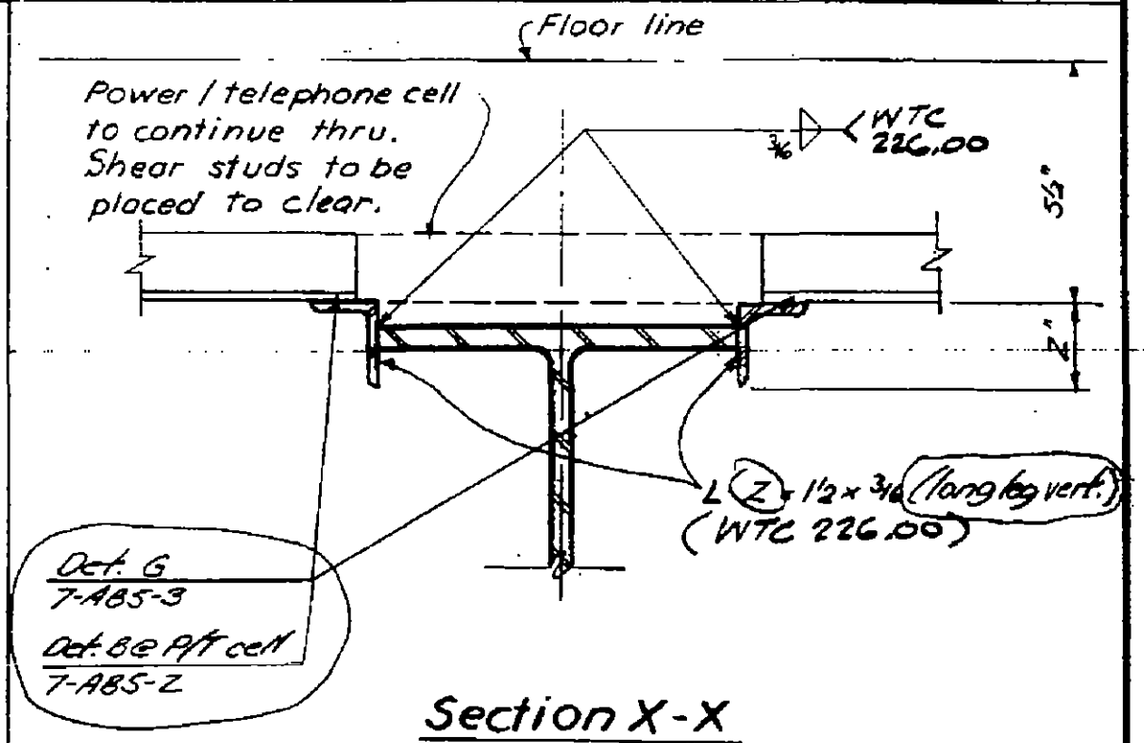

Section X-X

LICENSED PROFESSIONAL ENGINEER
LESLIE E. ROBERTSON
No. 34360
UNIVERSITY OF THE STATE OF NEW YORK

7-AB5-8.1

SKILLING - HELLE - CHRISTIANSEN - ROBERTSON Structural & Civil Engineers

PROJECT THE WORLD TRADE CENTER | TITLE STEEL DECK-SECTIONS Y, YY & Z | DATE 6-17-68

REVISIONS

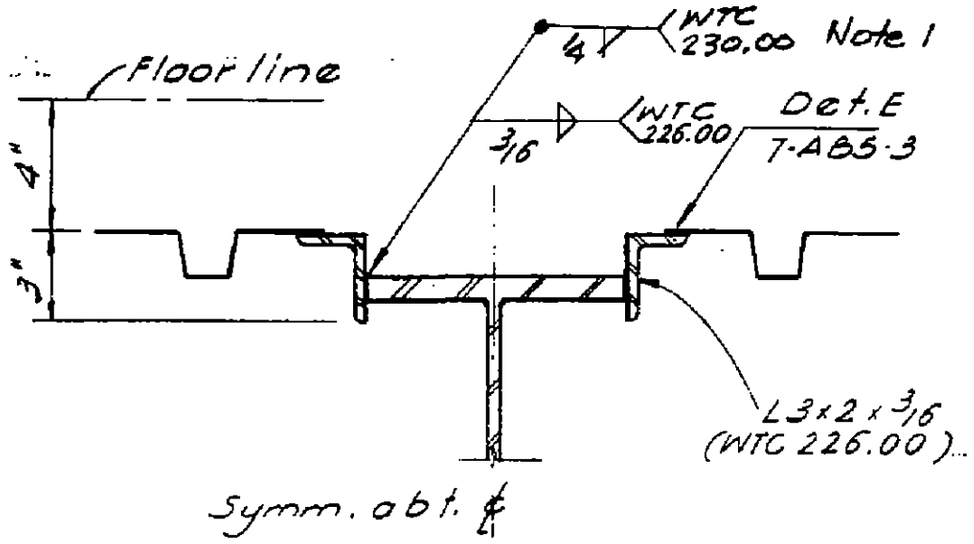

Section Y-Y
(See also typ. Det. K-7-ABS-3.2)
for outside of core area only.

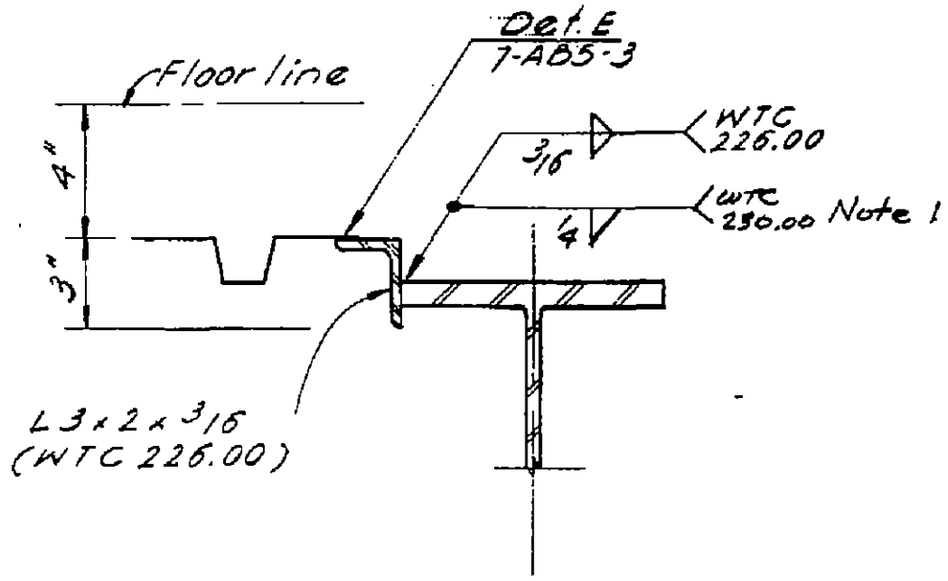

Section YY-YY
(See also typ. Det. K-7-ABS-3.2)
for outside of core area only.

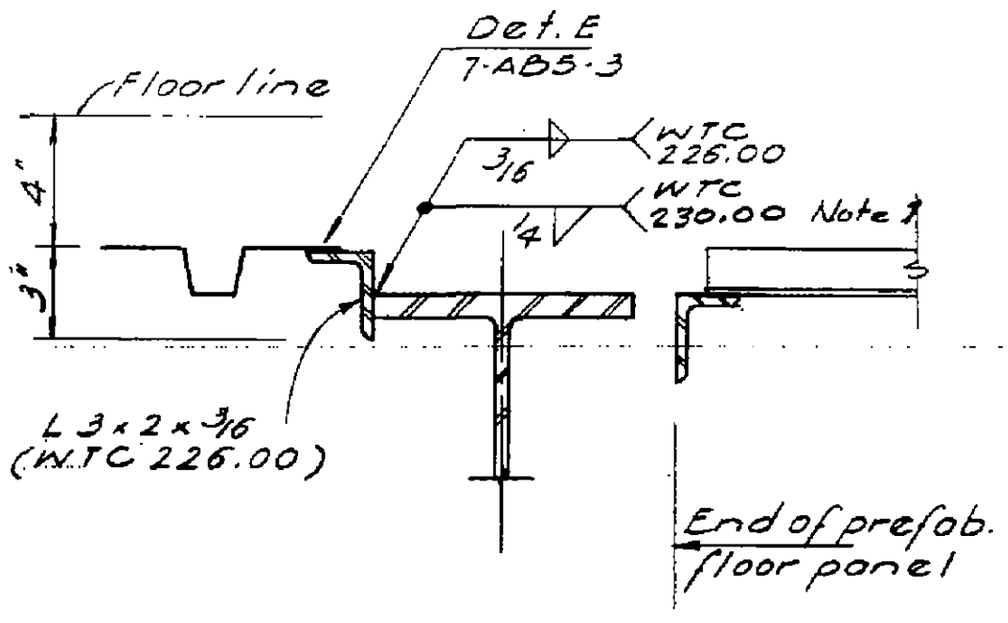

Section Z-Z
(See also typ. Det. K-7-ABS-3.2)

Note 1. Field weld by WTC 230.00 for beams already fabricated

LICENSED PROFESSIONAL ENGINEER LESLIE E. ROBERTSON No. 34360 UNIVERSITY OF THE STATE OF NEW YORK

7-ABS-8.2

SKILLING - HELLE - CHRISTIANSEN - ROBERTSON Structural & Civil Engineers

PROJECT THE WORLD TRADE CENTER | TITLE STEEL DECK - DETAIL K | DATE 10-18-67

REVISIONS
11-24-67
6-17-68

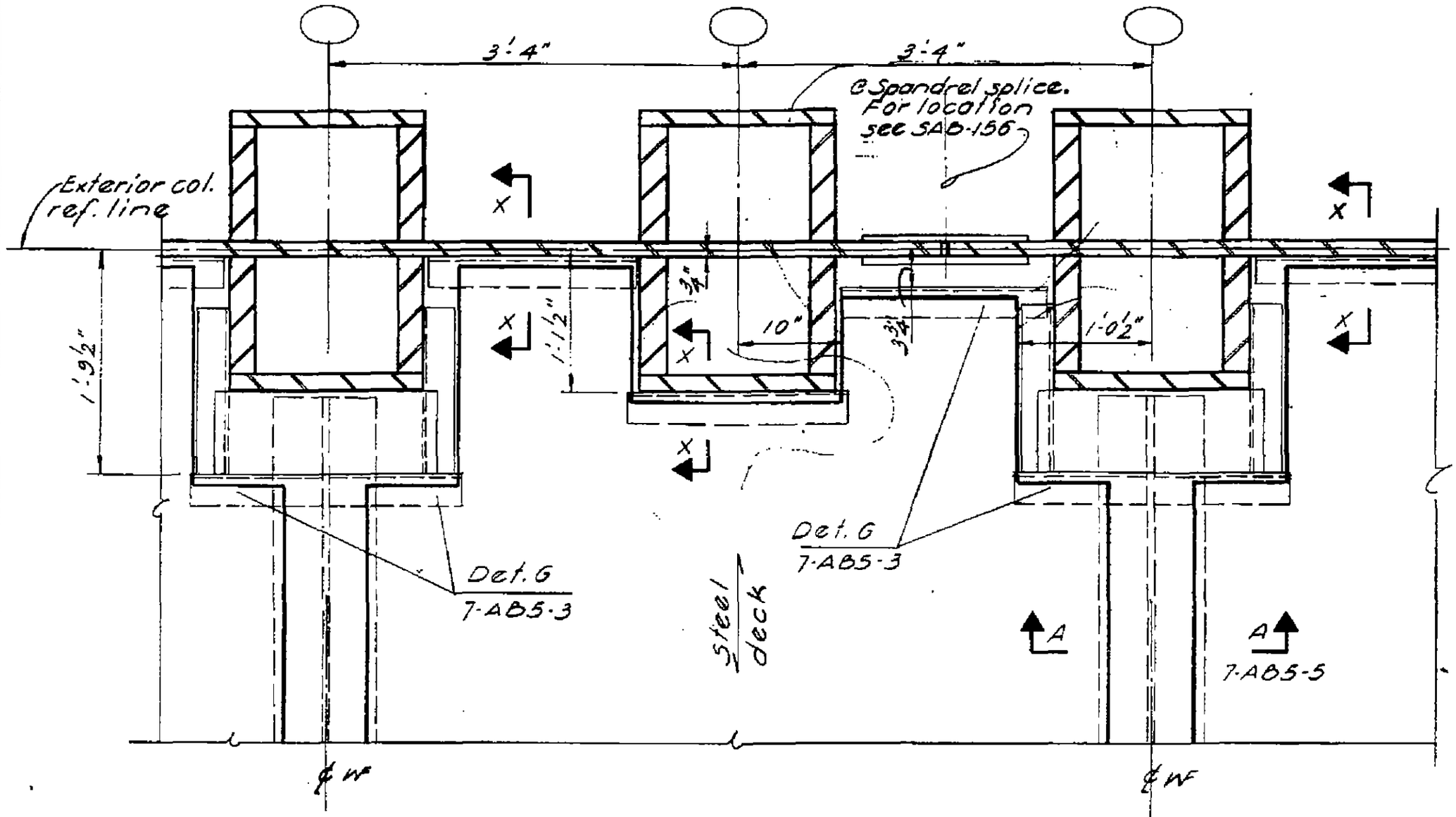

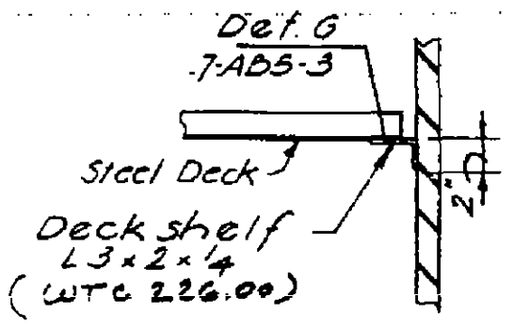

Section X-X

7-AB5-9

SKILLING - HELLE - CHRISTIANSEN - ROBERTSON Structural & Civil Engineers

PROJECT THE WORLD TRADE CENTER | TITLE STEEL DECK - DETAIL M | DATE 10-18-67

REVISIONS

11-24-67

6-17-68

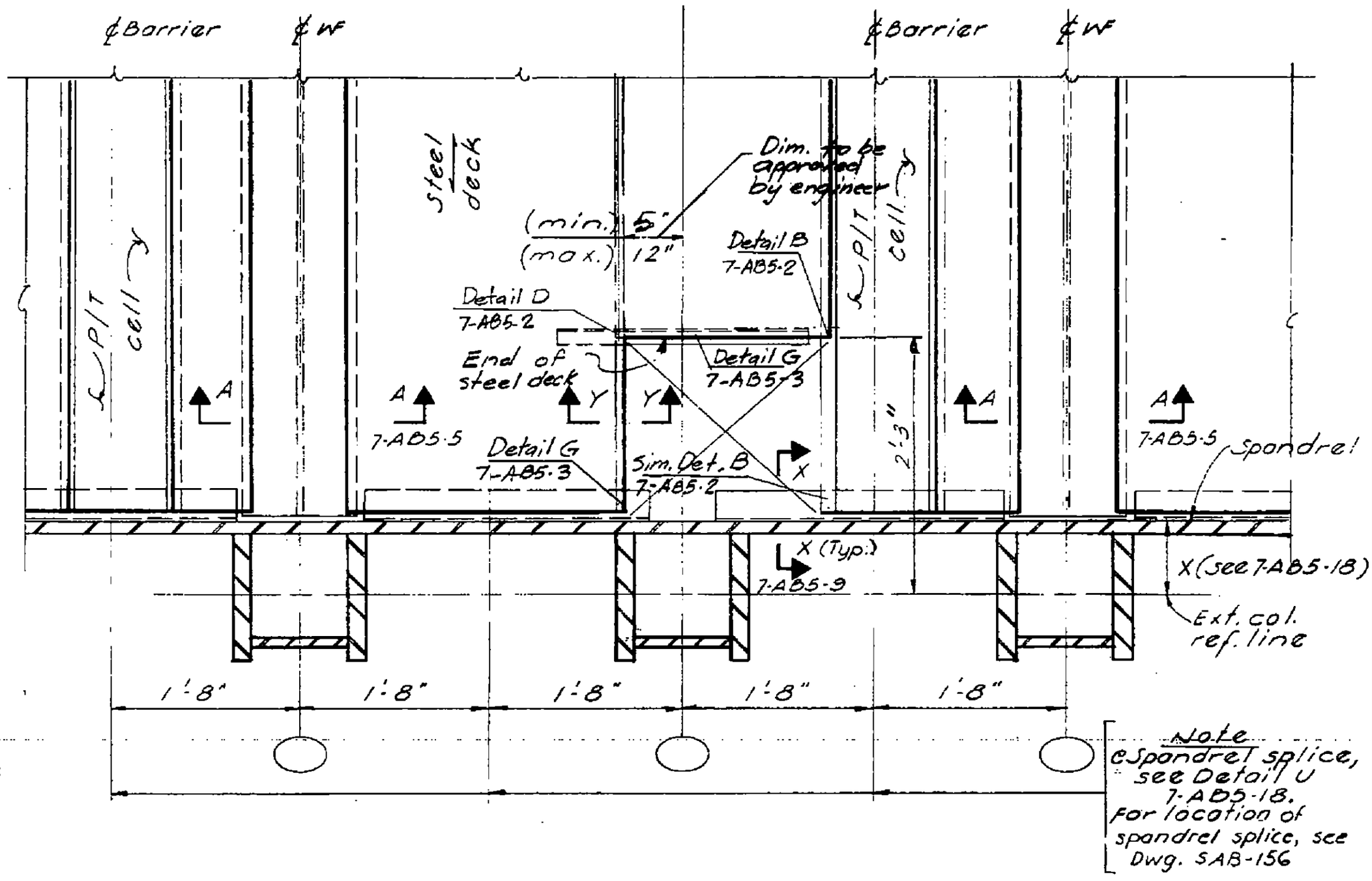

Note
℄ Spandrel splice, see Detail U 7-AB5-18. For location of spandrel splice, see Dwg. SAB-156

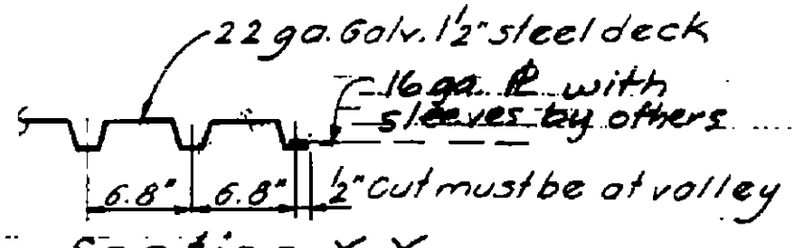

Section Y-Y

7-AB5-10

LICENSED PROFESSIONAL ENGINEER
LESLIE E. ROBERTSON
No. 34360
UNIVERSITY OF THE STATE OF NEW YORK

SKILLING - HELLE - CHRISTIANSEN - ROBERTSON Structural & Civil Engineers

PROJECT THE WORLD TRADE CENTER | TITLE STEEL DECK - DETAIL N | DATE 10-18-67

REVISIONS

11-24-67

6-17-68

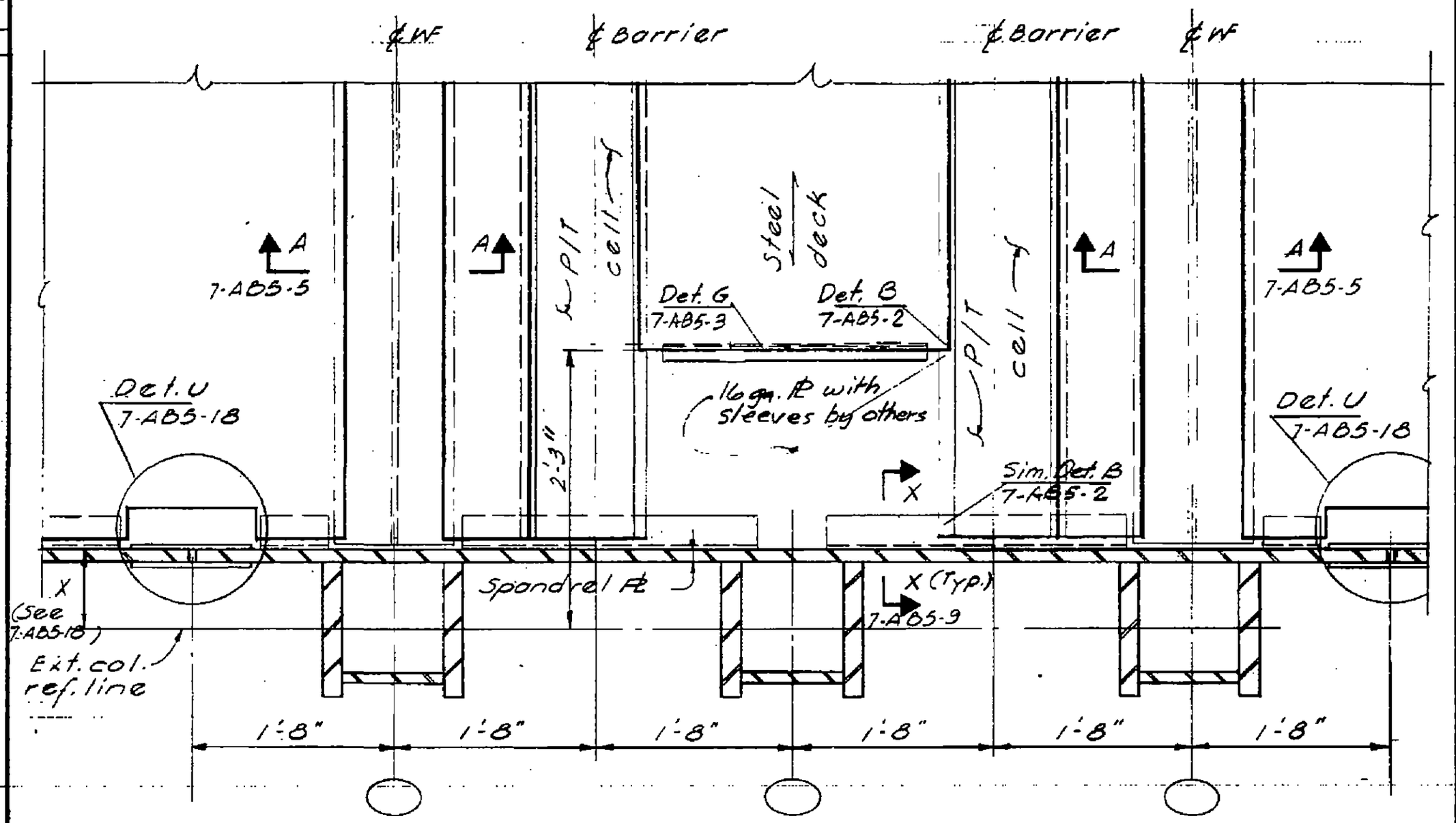

LICENSED PROFESSIONAL ENGINEER
LESLIE E. ROBERTSON
No. 34980
UNIVERSITY OF THE STATE OF NEW YORK

7-AB5-11

SKILLING - HELLE - CHRISTIANSEN - ROBERTSON Structural & Civil Engineers

PROJECT THE WORLD TRADE CENTER | TITLE STEEL DECK - DETAIL P | DATE 10-18-67

REVISIONS
11-24-67
6-17-68

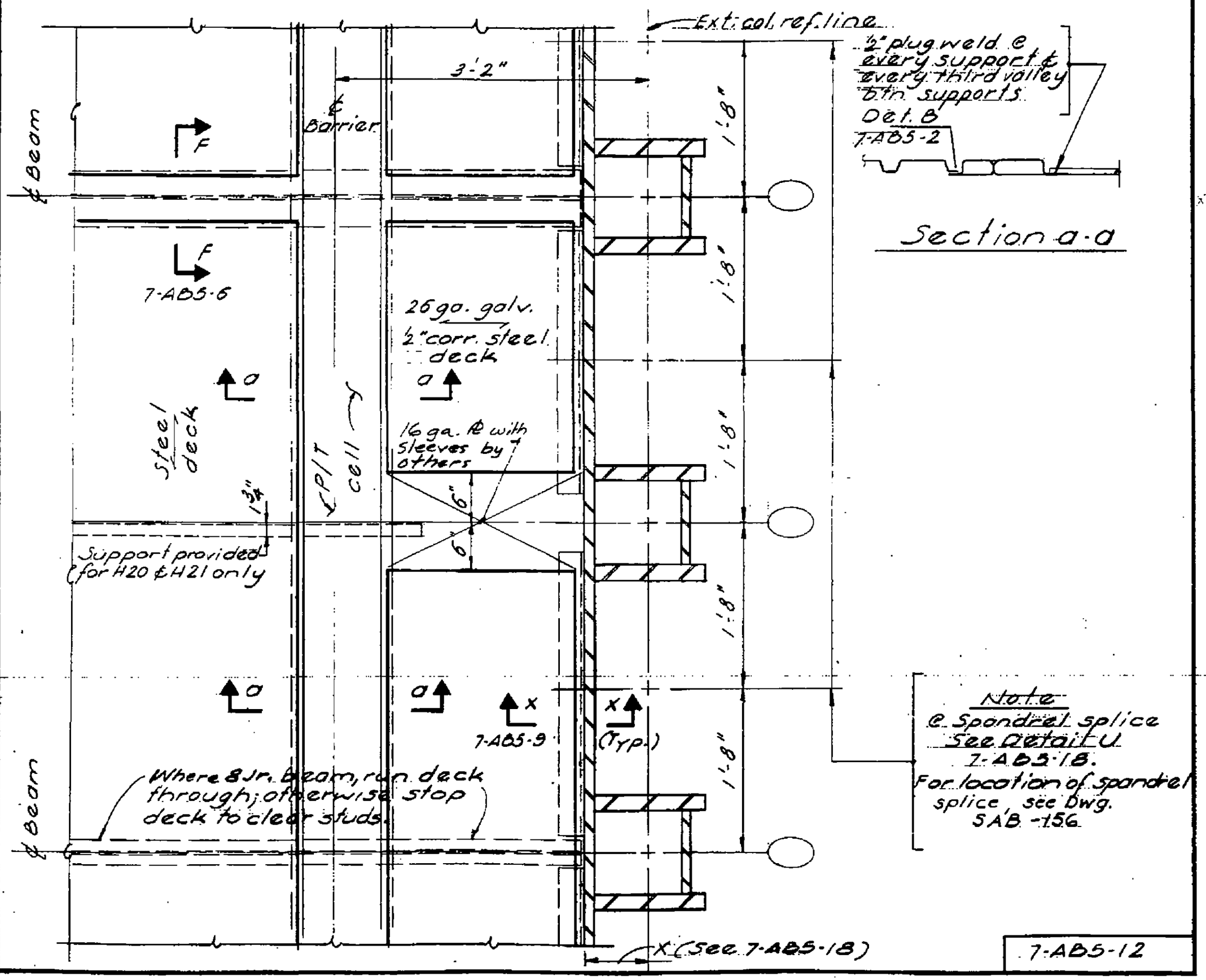

LICENSED PROFESSIONAL ENGINEER
LESLIE E. ROBERTSON
No. 84860
UNIVERSITY OF THE STATE OF NEW YORK

7-AB5-12

SKILLING - HELLE - CHRISTIANSEN - ROBERTSON Structural & Civil Engineers

PROJECT THE WORLD TRADE CENTER | TITLE STEEL DECK - DETAIL Q | DATE 10-18-67

REVISIONS
11-24-67
6-17-68

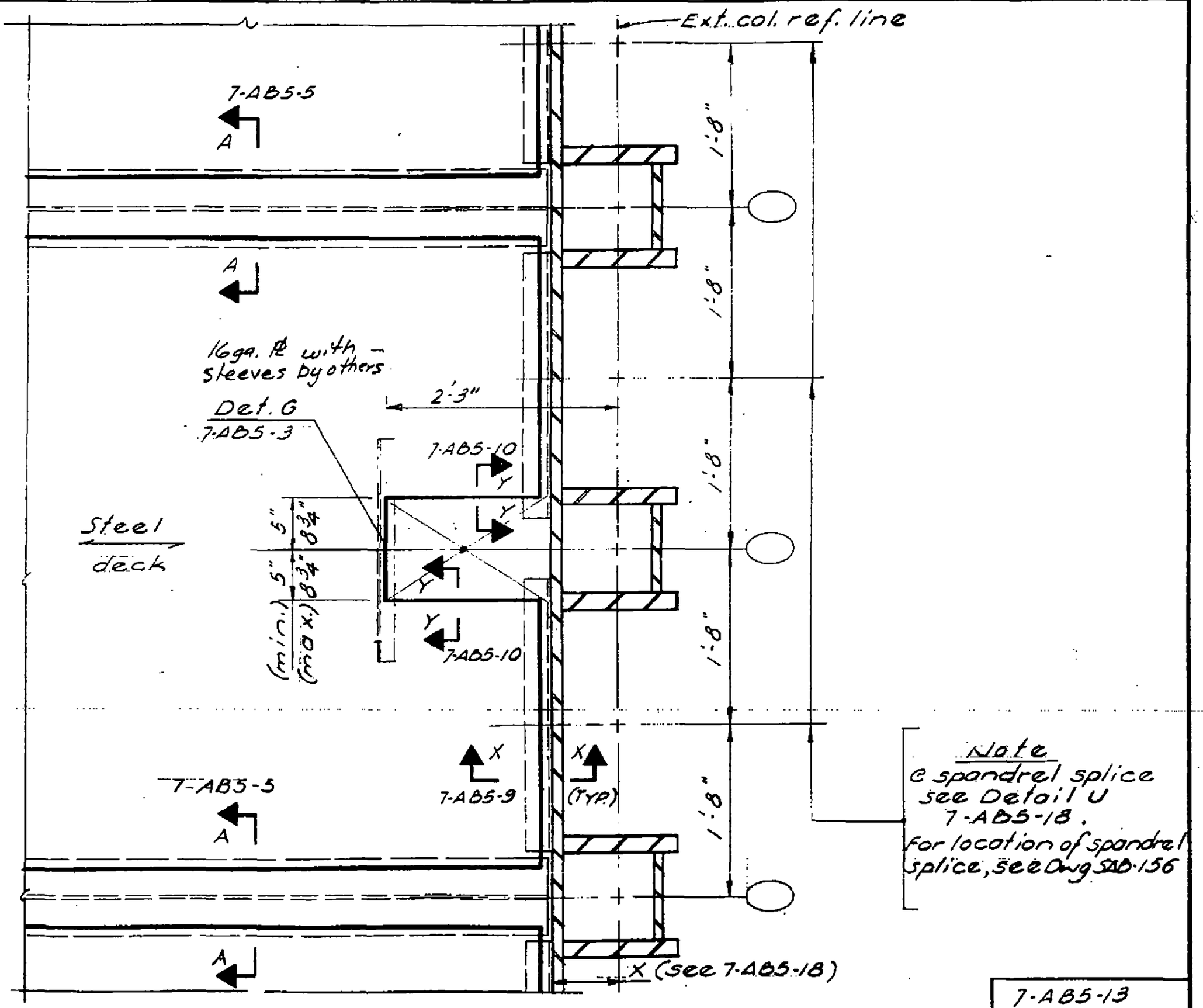

Note
@ spandrel splice see Detail U 7-AB5-18.
For location of spandrel splice, see Dwg SAB-156

7-AB5-13

SKILLING - HELLE - CHRISTIANSEN - ROBERTSON Structural & Civil Engineers

PROJECT THE WORLD TRADE CENTER | TITLE STEEL DECK - DETAIL R | DATE 10-18-67

REVISIONS

11-24-67

6-17-68

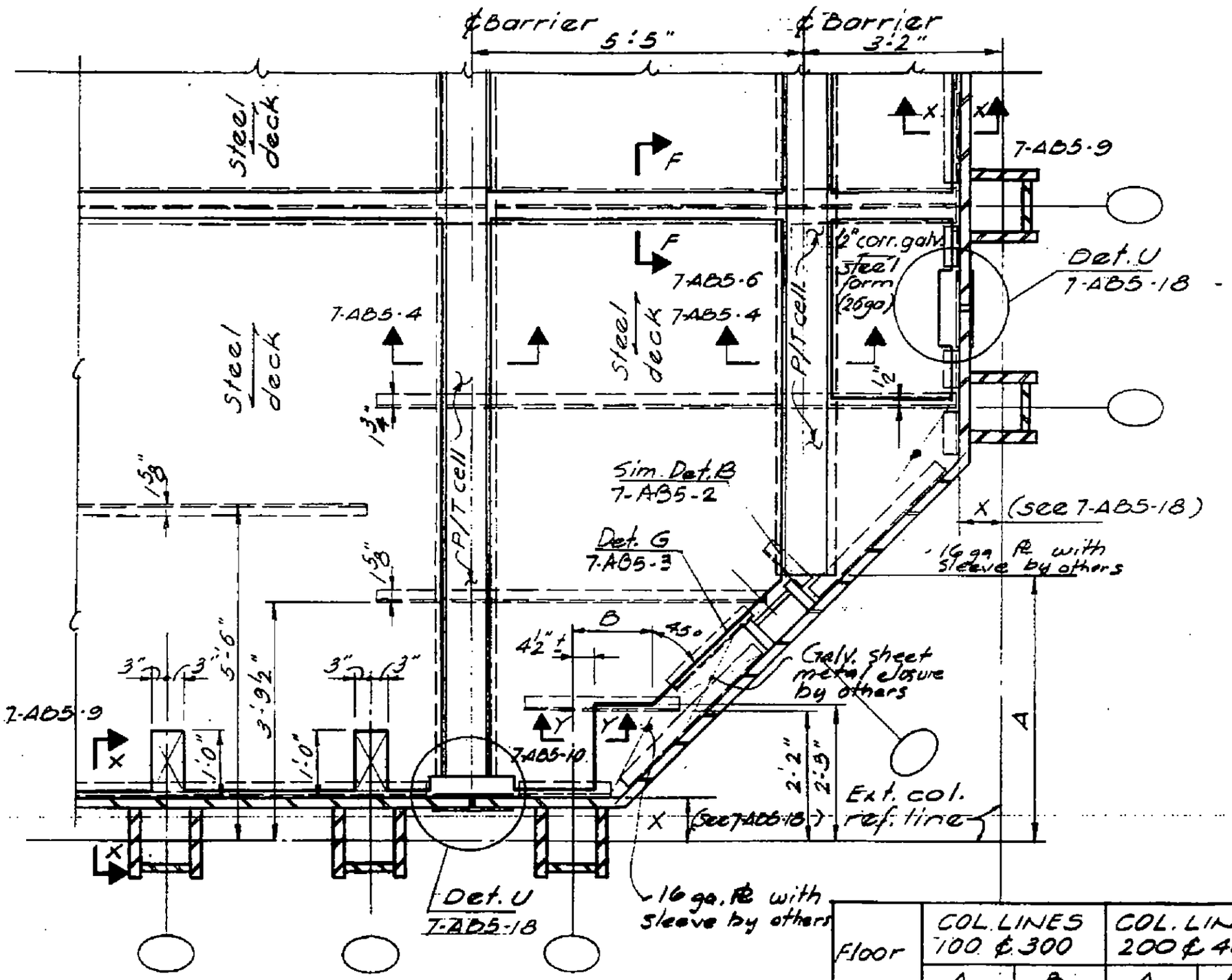

Floor	COL. LINES 100 ℄ 300		COL. LINES 200 ℄ 400	
	A	B	A	B
9	4'-5"	1'-8"	4'-3"	1'-8"
43	4'-3"	1'-7"	4'-5½"	1'-7"
77	4'-5½"	1'-7"	4'-3"	1'-7"
107	4'-3"	1'-7"	4'-5½"	1'-7"

LICENSED PROFESSIONAL ENGINEER LESLIE E. ROBERTSON No. 34360 STATE OF NEW YORK

7-AB5-14

SKILLING - HELLE - CHRISTIANSEN - ROBERTSON Structural & Civil Engineers

PROJECT THE WORLD TRADE CENTER | TITLE STEEL DECK-DETAILS | DATE 10-18-67

REVISIONS
11-24-67
6-17-68

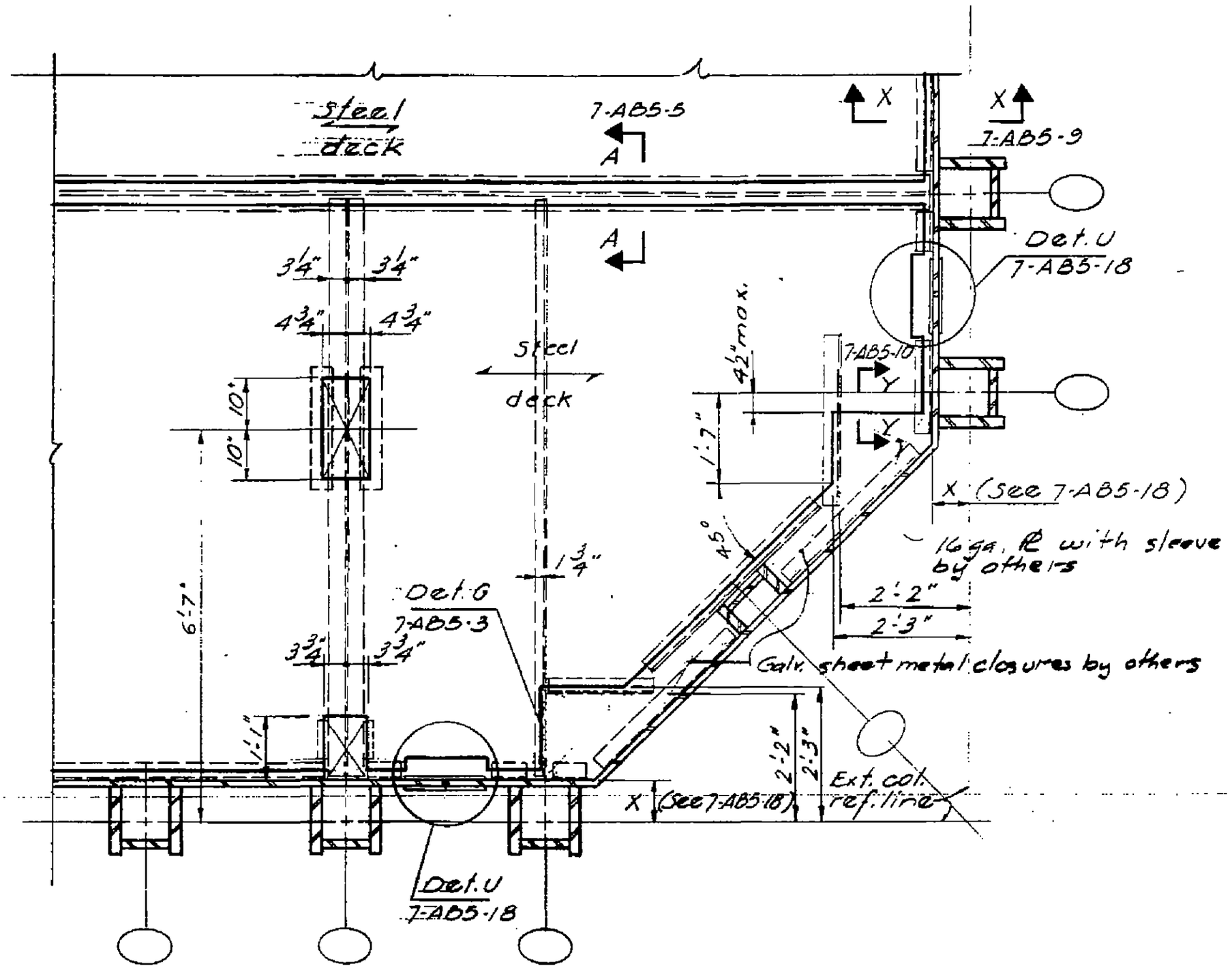

LICENSED PROFESSIONAL ENGINEER
LESLIE E. ROBERTSON
No. 34960
UNIVERSITY OF THE STATE OF NEW YORK

7-AB5-15

SKILLING - HELLE - CHRISTIANSEN - ROBERTSON Structural & Civil Engineers

PROJECT THE WORLD TRADE CENTER | TITLE STEEL DECK SUPPORTS | DATE 10-18-67

REVISIONS

11-24-67

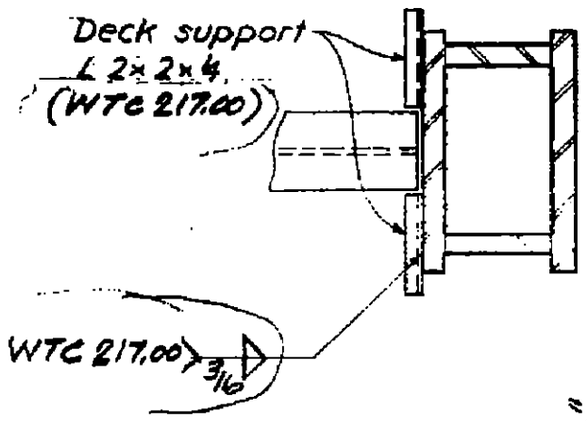

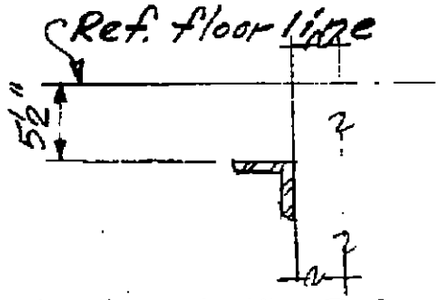

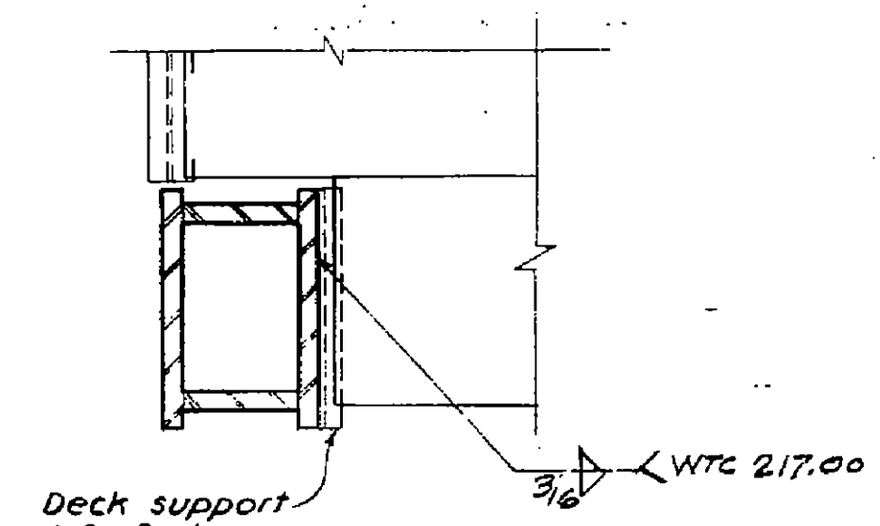

Typical Section

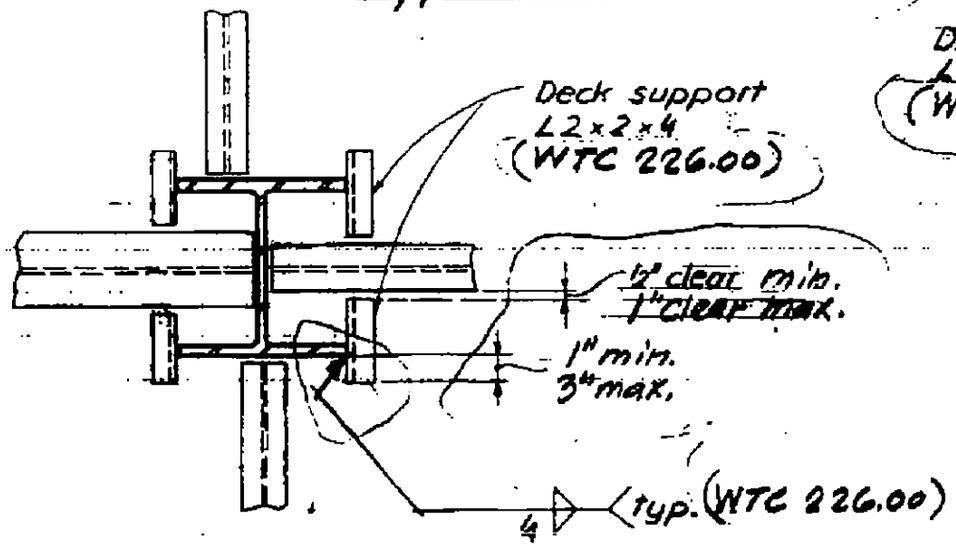

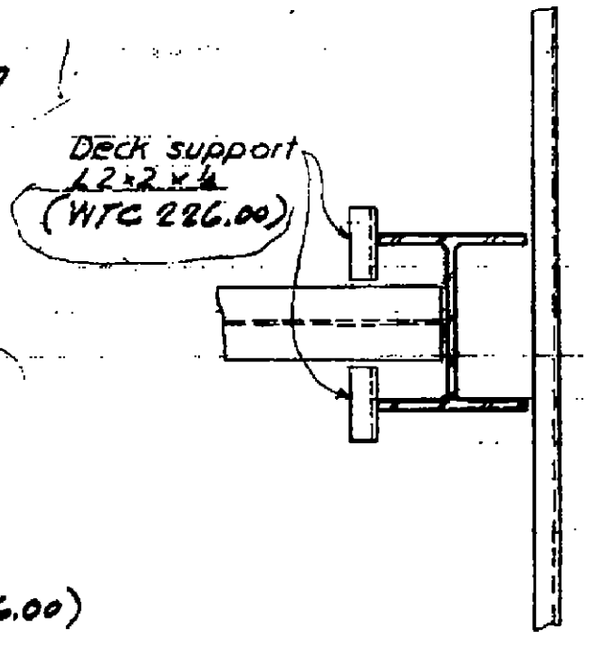

LEONARD ROBERTSON
LICENSED PROFESSIONAL ENGINEER
No. 34360
STATE OF NEW YORK

120

7-ABS-16

SKILLING - HELLE - CHRISTIANSEN - ROBERTSON Structural & Civil Engineers

PROJECT THE WORLD TRADE CENTER | TITLE STEEL DECK - DETAIL T | DATE 6-17-68

REVISIONS

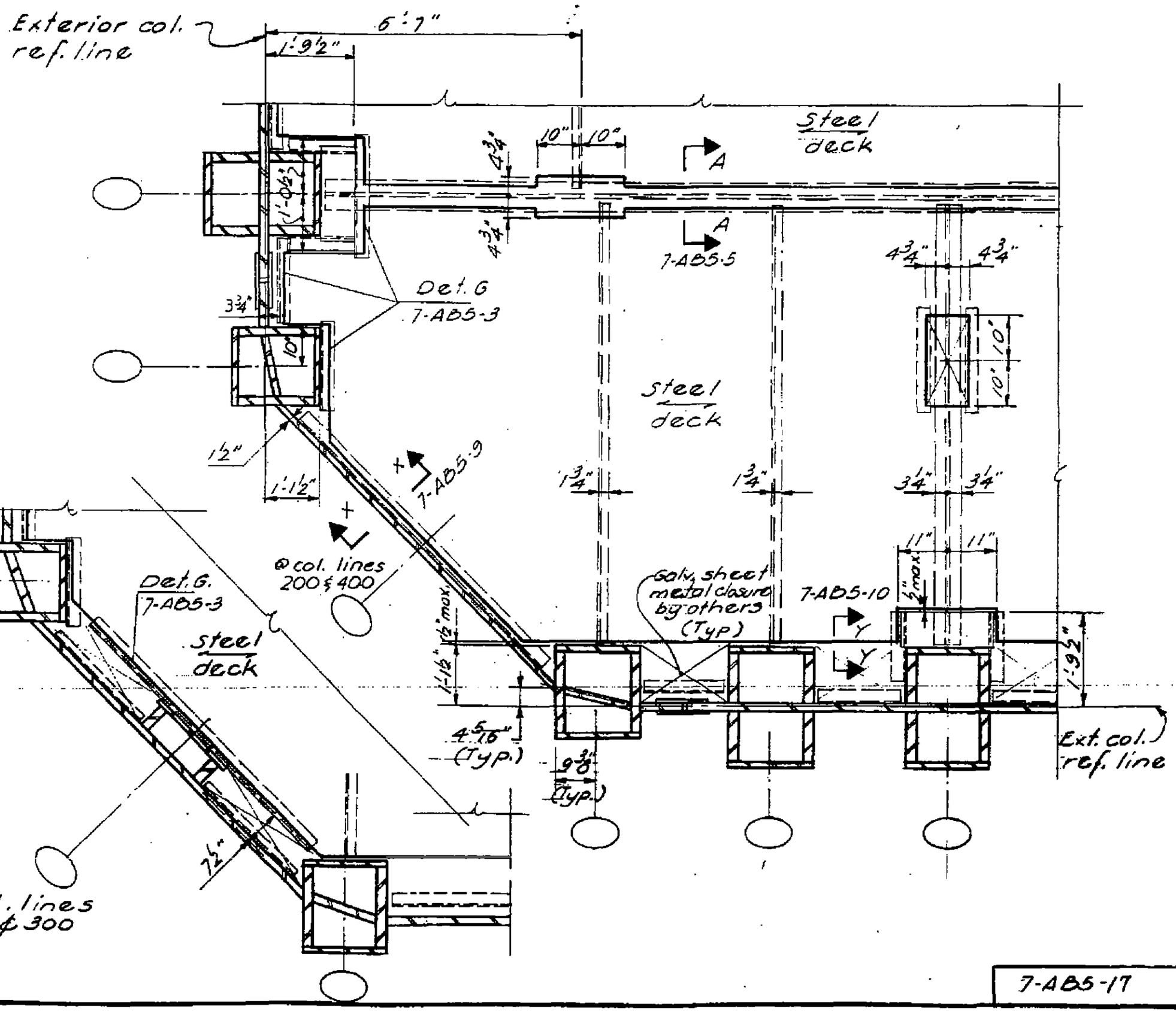

LESLIE E. ROBERTSON LICENSED PROFESSIONAL ENGINEER No. 34360 STATE OF NEW YORK

7-AB5-17

SKILLING - HELLE - CHRISTIANSEN - ROBERTSON Structural & Civil Engineers

PROJECT THE WORLD TRADE CENTER | TITLE STEEL DECK - DETAIL U | DATE 6-17-68

REVISIONS

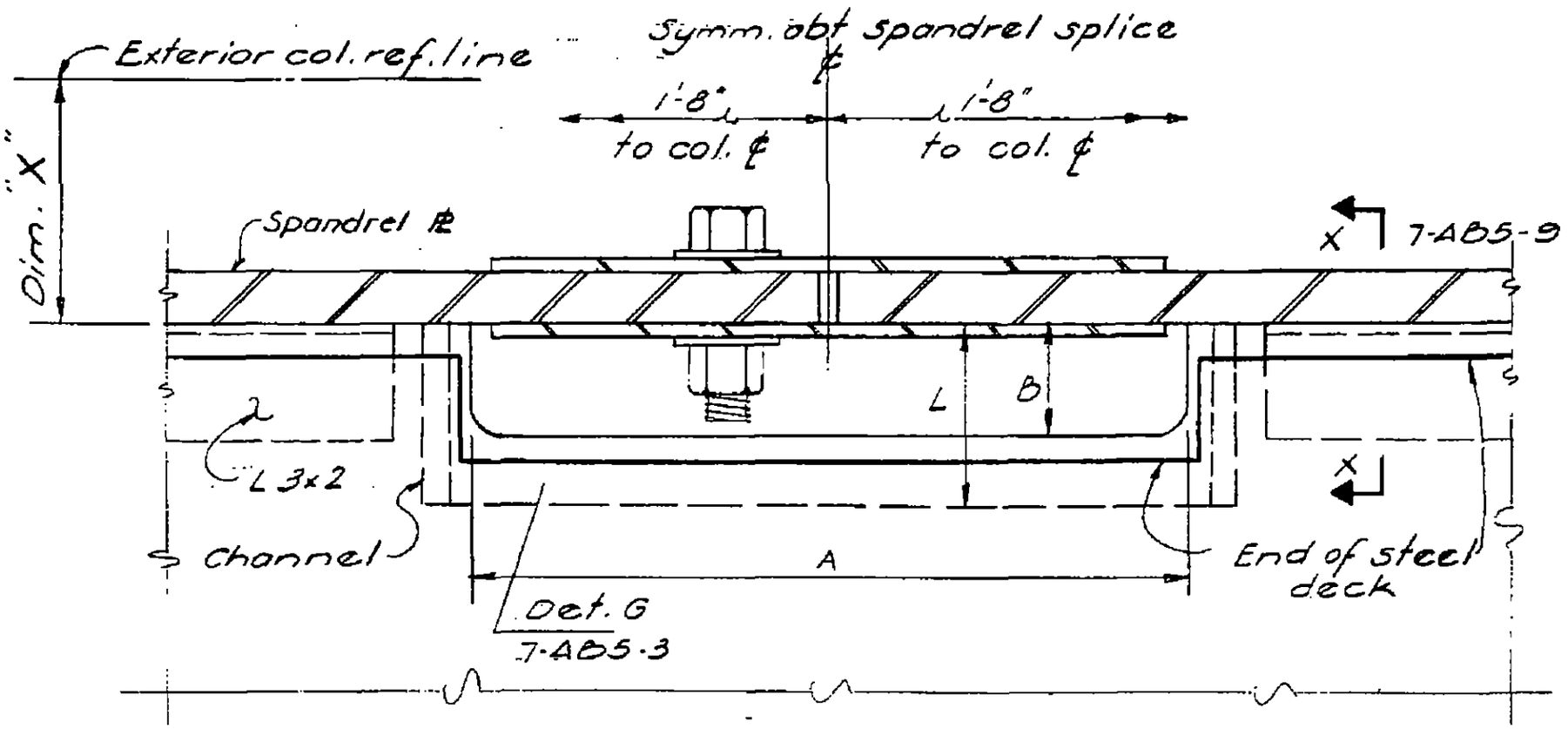

Floor	Dim. "X"	Channel		Cut	
		Size	Length (L)	A	B
9	7 7/8"	18 n 42.7	4 3/4"	15 3/8"	2 3/4"
41, 43	7 7/16"	15 n 33.9	4 3/4"	10"	2 3/4"
44 TO 48	7 3/8"				
49	7 5/16"				
75, 77	7 1/16"				
78 TO 83	6 15/16"	15 n 33.9	4 3/8"	8"	2 3/8"
84 ℄ UP	6 7/8"				

LICENSED PROFESSIONAL ENGINEER LESLIE E. ROBERTSON No. 34960 UNIVERSITY OF THE STATE OF NEW YORK

7-AD5-18

SKILLING - HELLE - CHRISTIANSEN - ROBERTSON Structural & Civil Engineers

PROJECT THE WORLD TRADE CENTER | TITLE STEEL DECK DETAILS V & W | DATE 6-17-68

REVISIONS

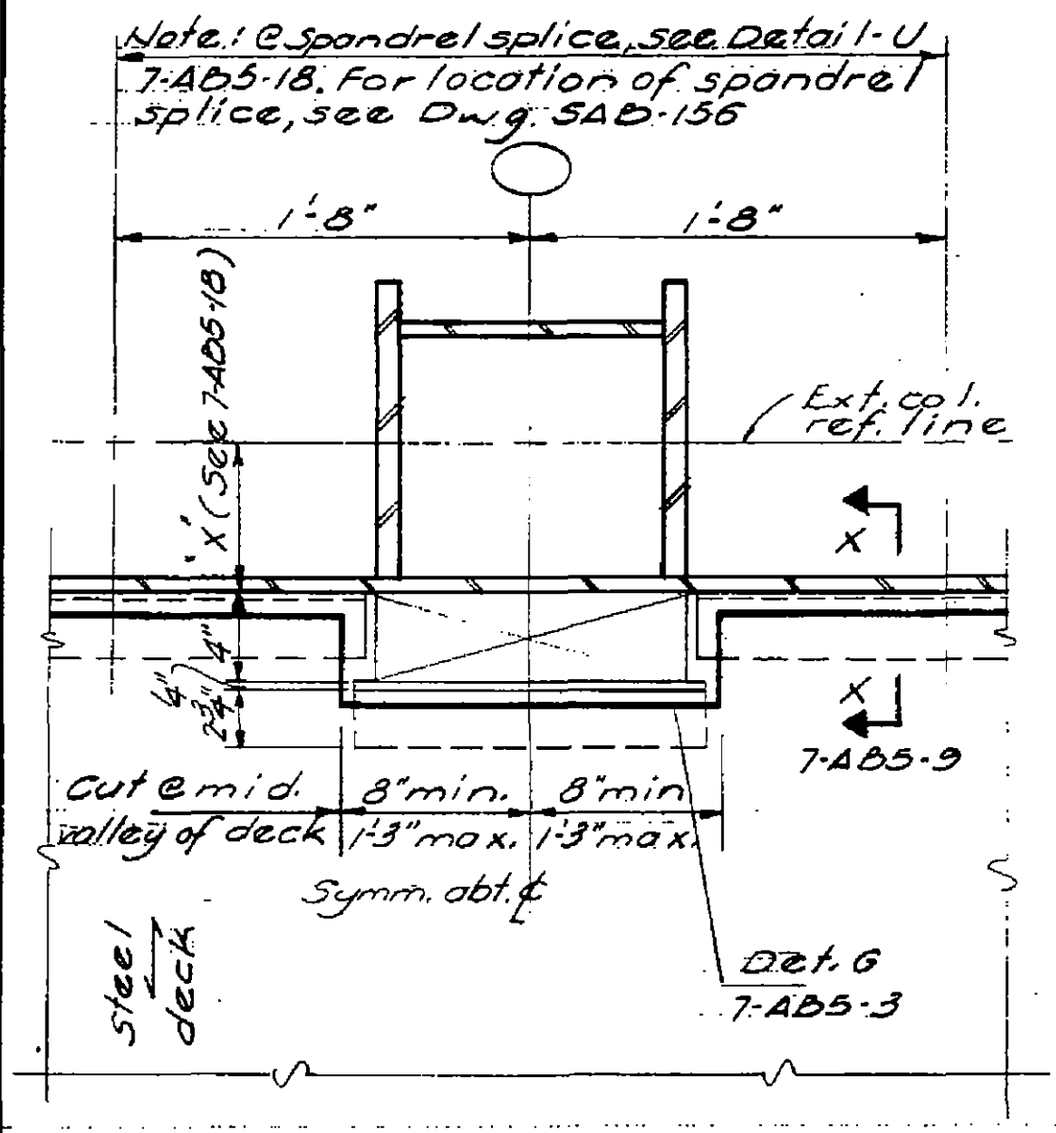

Detail V

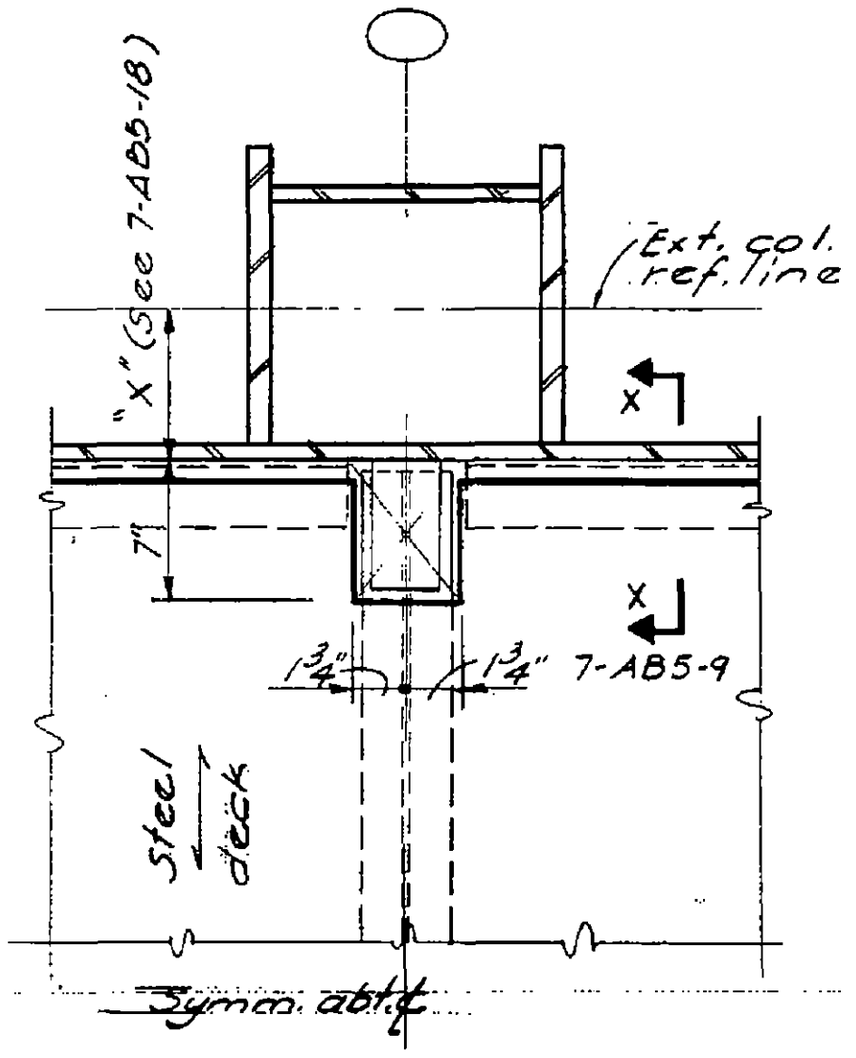

Detail W

LICENSED PROFESSIONAL ENGINEER
LESLIE E. ROBERTSON
No. 34360
UNIVERSITY OF THE STATE OF NEW YORK

7-AB5-19

SKILLING, HELLE, CHRISTIANSEN, ROBERTSON — Structural & Civil Engineers

PROJECT THE WORLD TRADE CENTER | TITLE STEEL DECK SECTIONS | DATE 3-28-69

REVISIONS

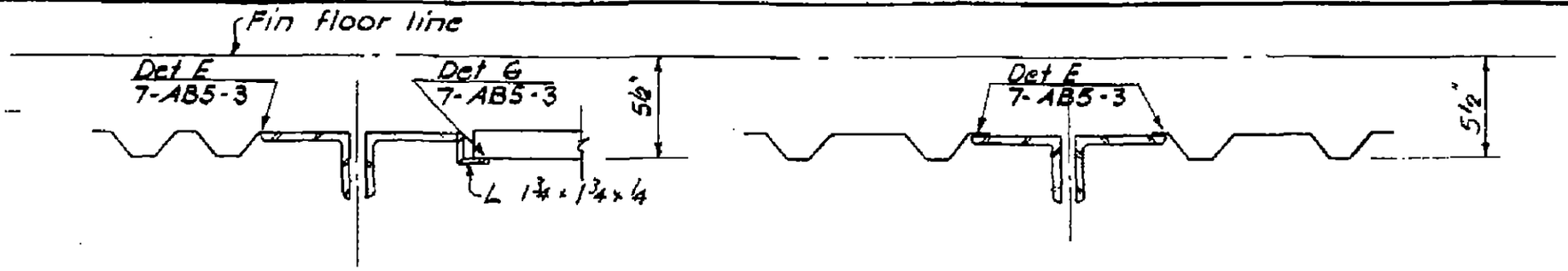

Section A A - A A

Section BB - BB

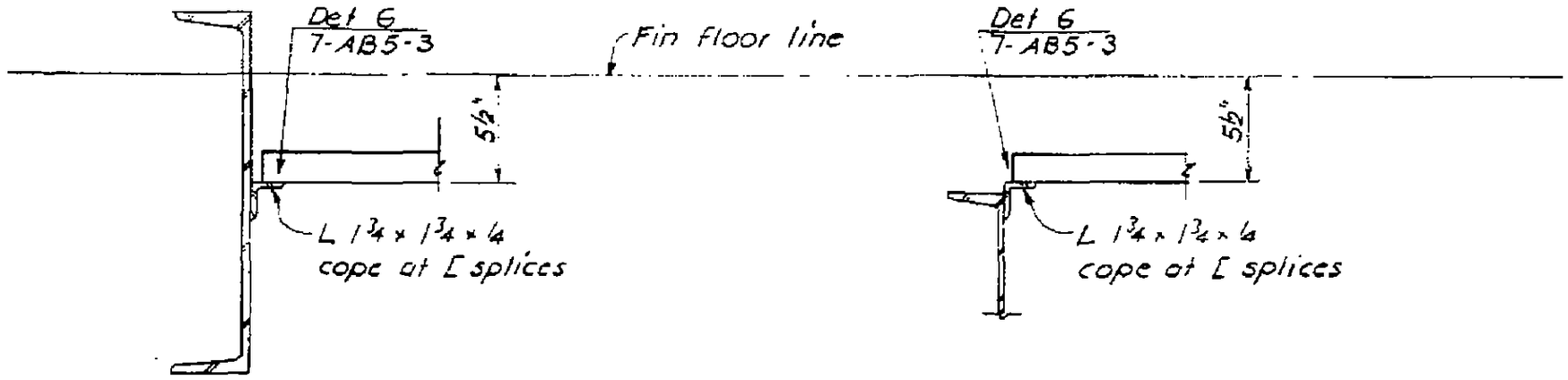

Section CC - CC

Section EE - EE

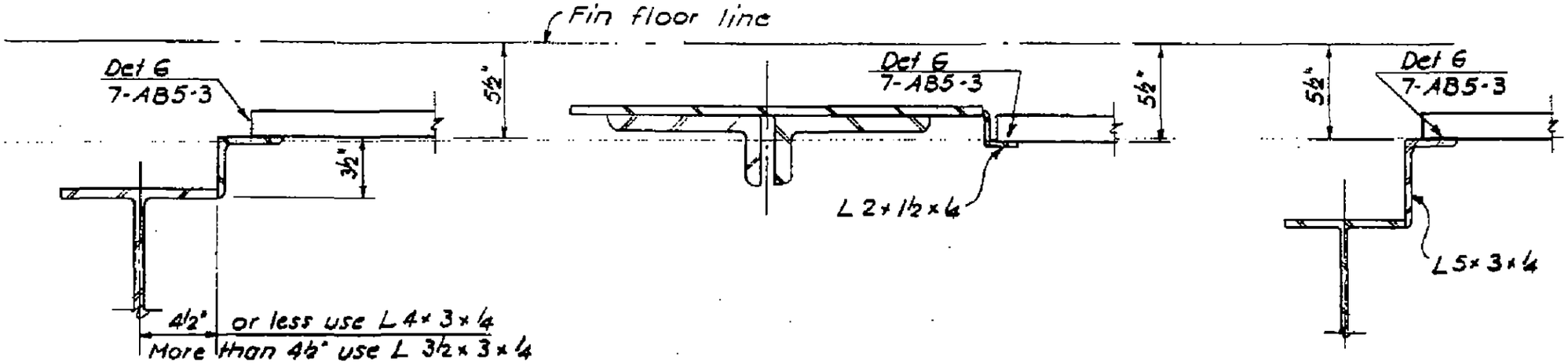

Section X - X

Section Y - Y

Section Z - Z

LICENSED PROFESSIONAL ENGINEER
LESLIE E. ROBERTSON
No. 34960
UNIVERSITY OF THE STATE OF NEW YORK

DESIGNED S. Kap
DRAWN F. Smith
REVIEWED S. Kap

7-AB5-20

SKILLING, HELLE, CHRISTIANSEN, ROBERTSON — Structural & Civil Engineers

PROJECT THE WORLD TRADE CENTER | TITLE STEEL DECK SECTIONS | DATE 9-1-70

REVISIONS
9/8/70

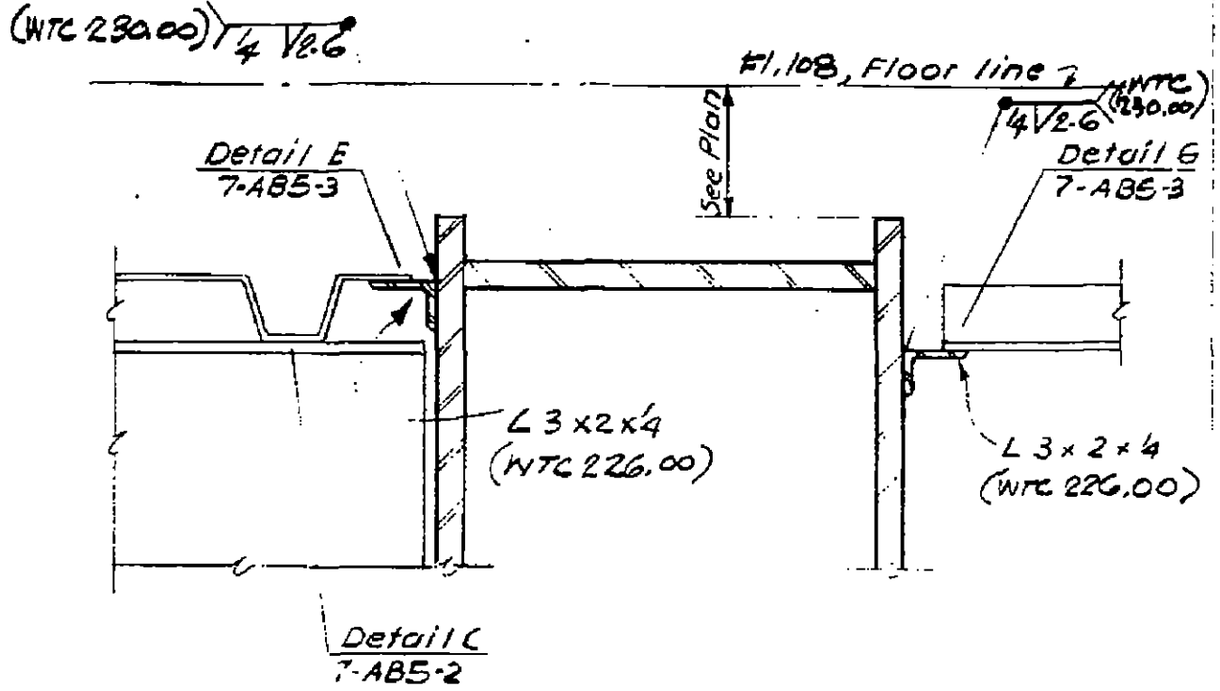

Section A-A

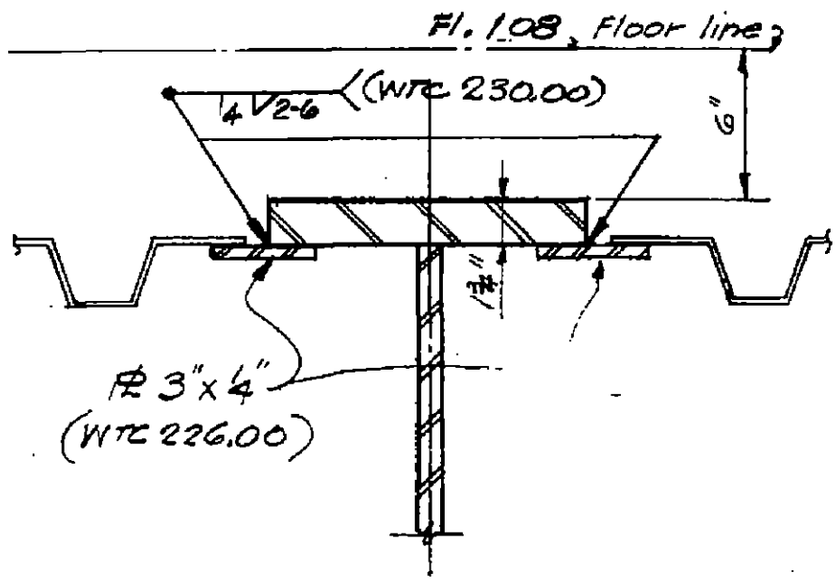

Section B-B

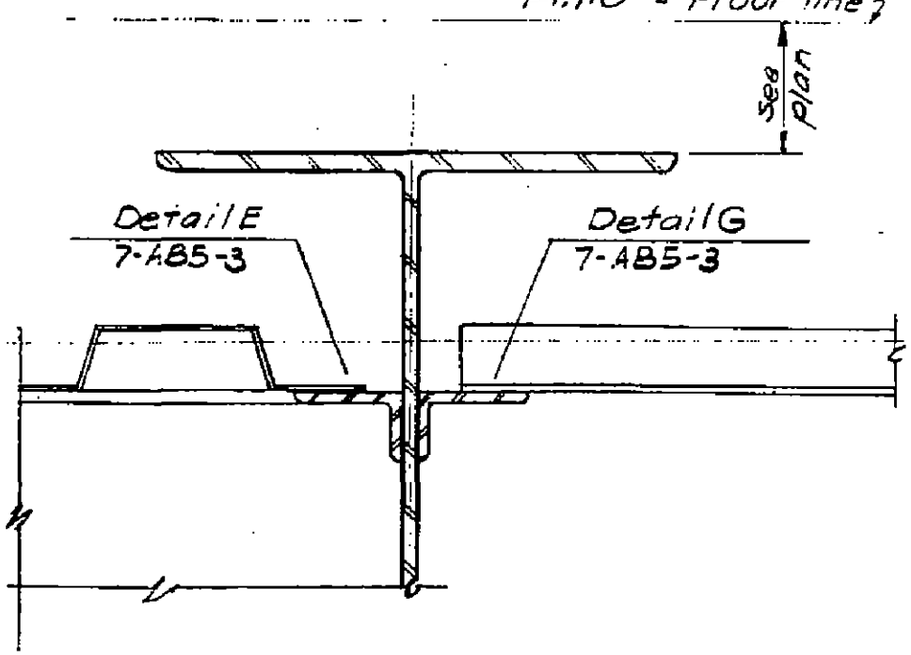

Section C-C

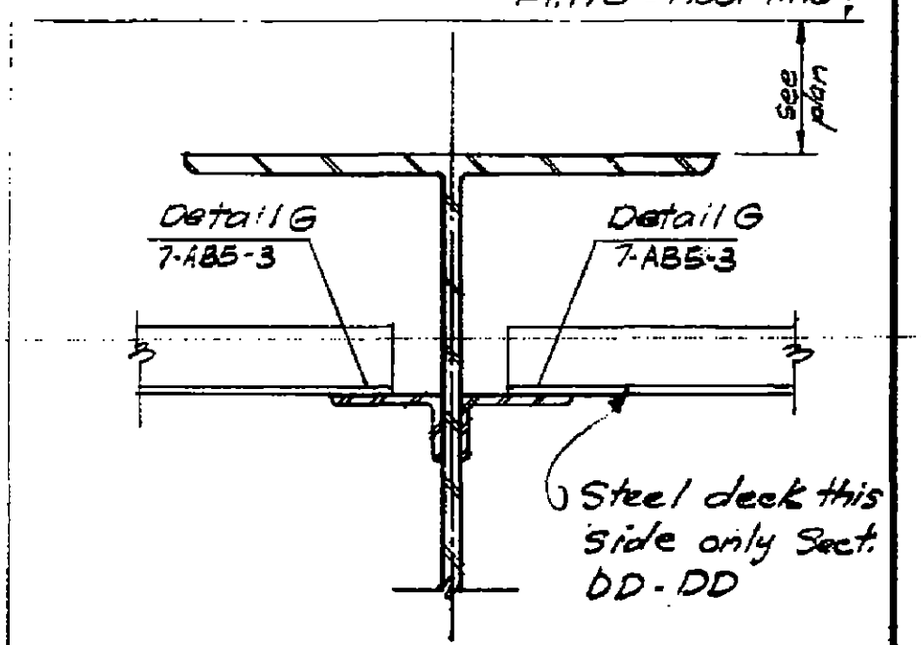

Section D-D

Section DD-DD
as noted

R

DESIGNED

DRAWN F. Smith

REVIEWED

7-AB5-21

Office

SKILLING, HELLE, CHRISTIANSEN, ROBERTSON — Structural & Civil Engineers

PROJECT THE WORLD TRADE CENTER | TITLE STEEL DECK SECTIONS | DATE 9-1-70

REVISIONS

9/8/70

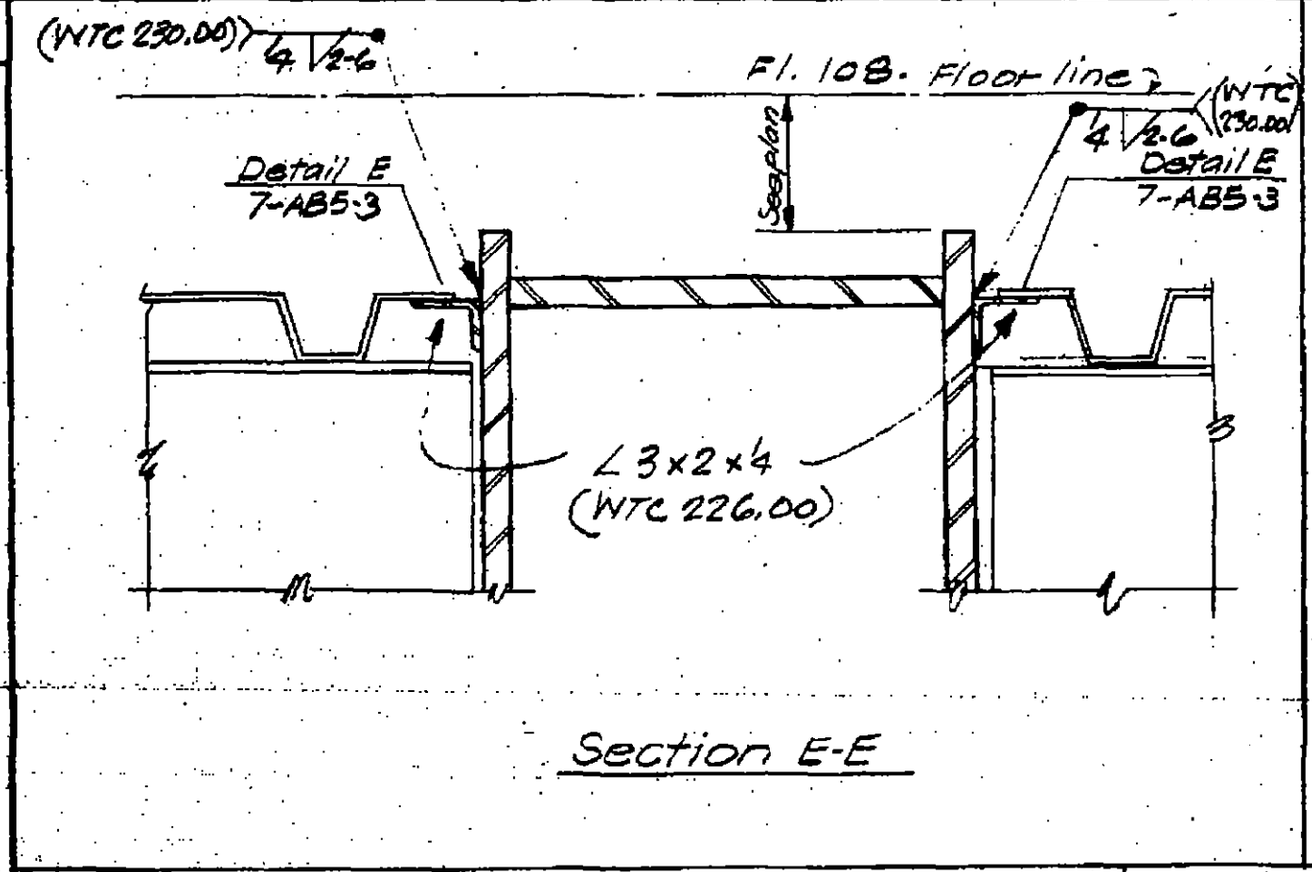

Section E-E

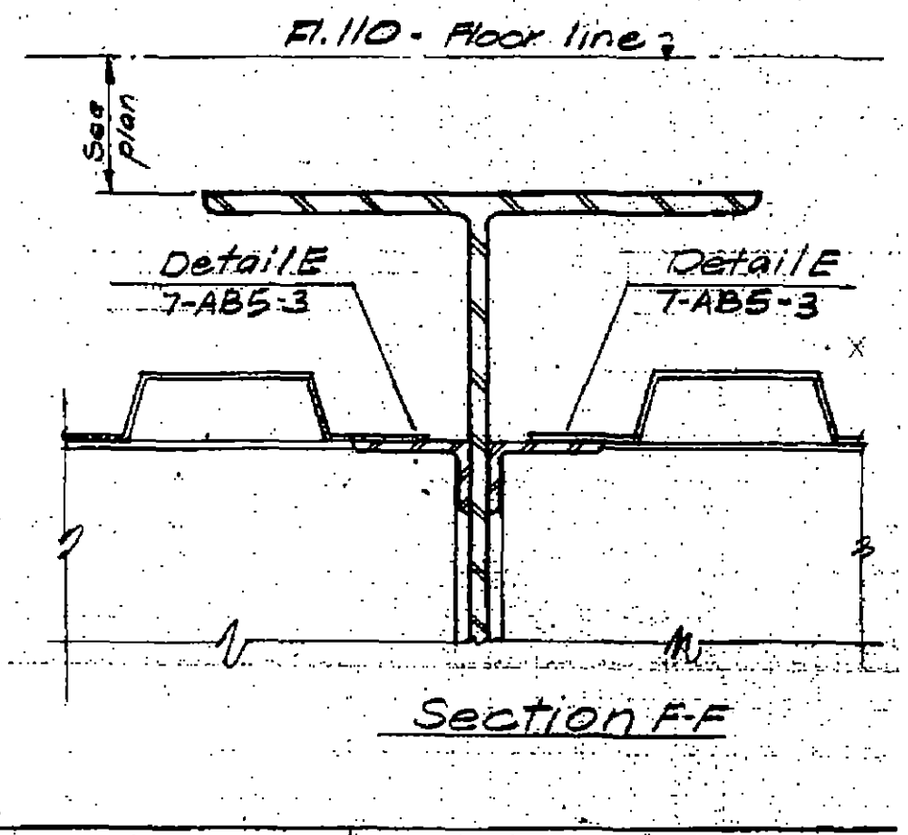

Section F-F

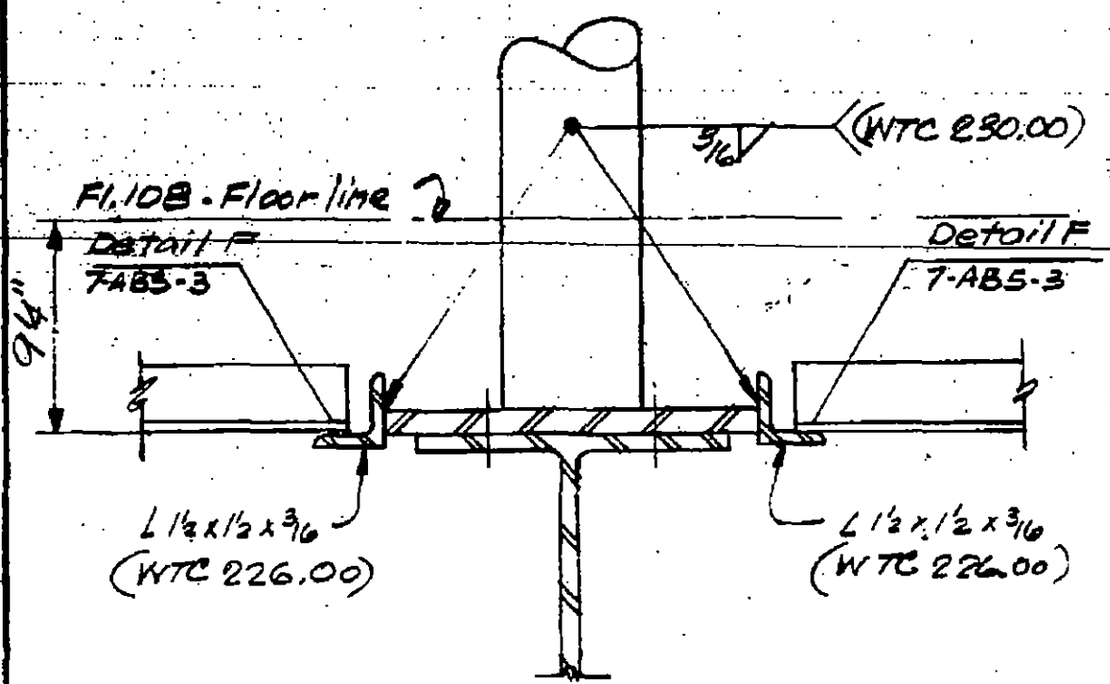

Section G-G

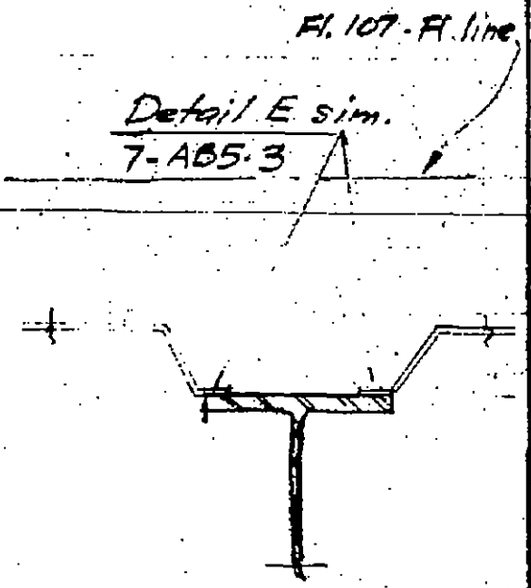

Section H-H

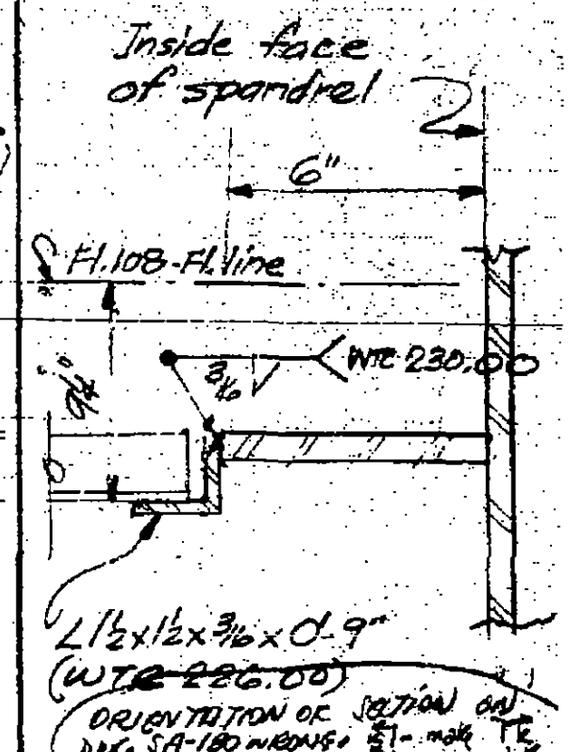

Section K-K

L.U.

7-AB5-22

LICENSED PROFESSIONAL ENGINEER
LESLIE E. ROBERTSON
No 34360
UNIVERSITY OF THE STATE OF NEW YORK

R

DESIGNED

DRAWN P. Ocelo

REVIEWED

SKILLING, HELLE, CHRISTIANSEN, ROBERTSON — Structural & Civil Engineers

PROJECT THE WORLD TRADE CENTER | TITLE STEEL DECK SECTIONS | DATE 9-1-70

REVISIONS

9/8/70

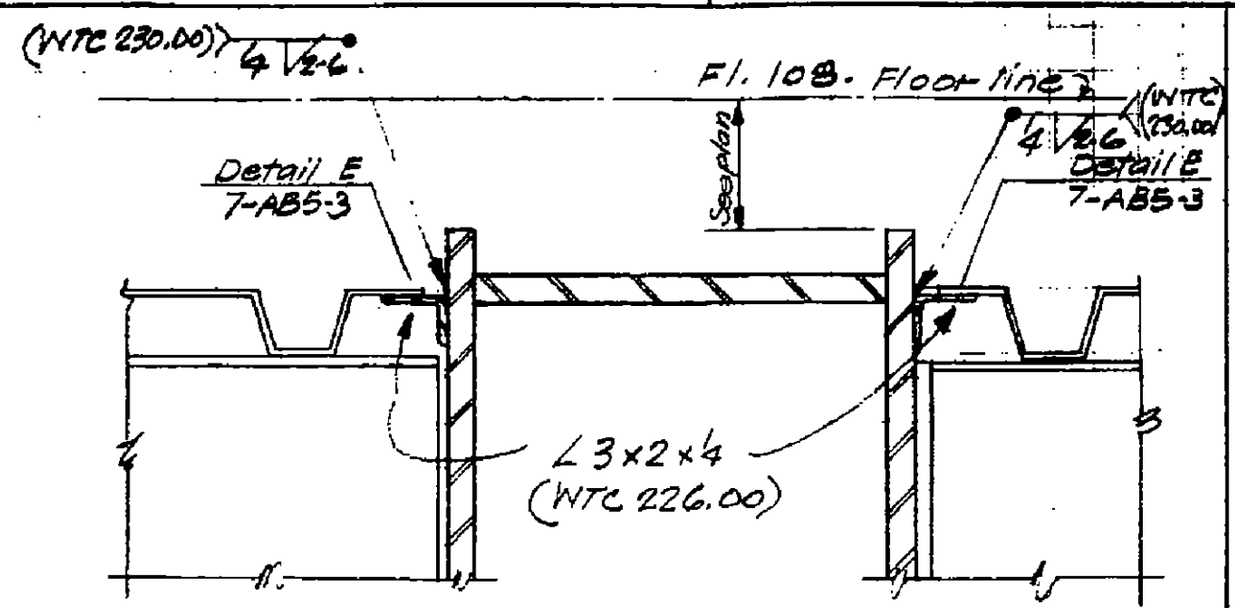

Section E-E

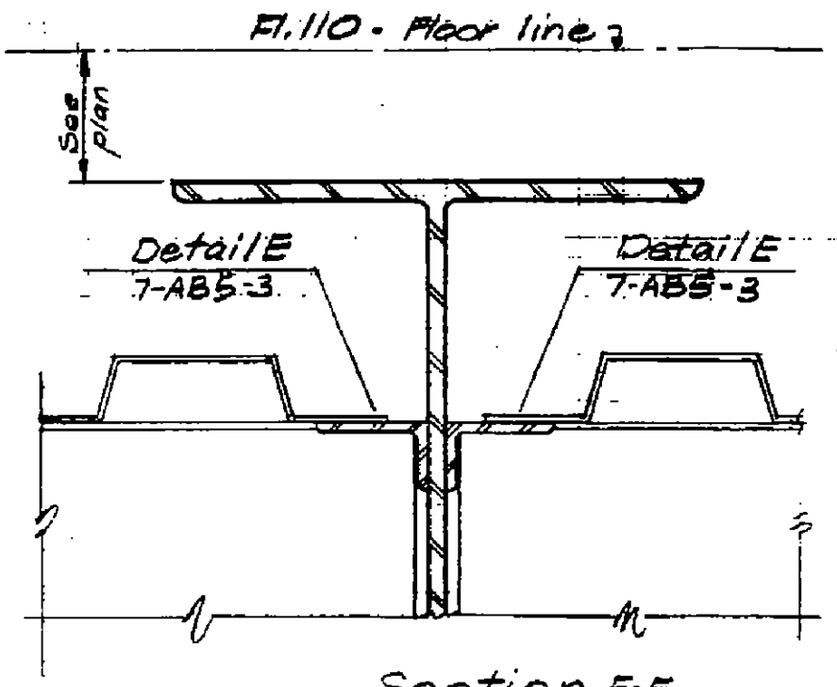

Section F-F

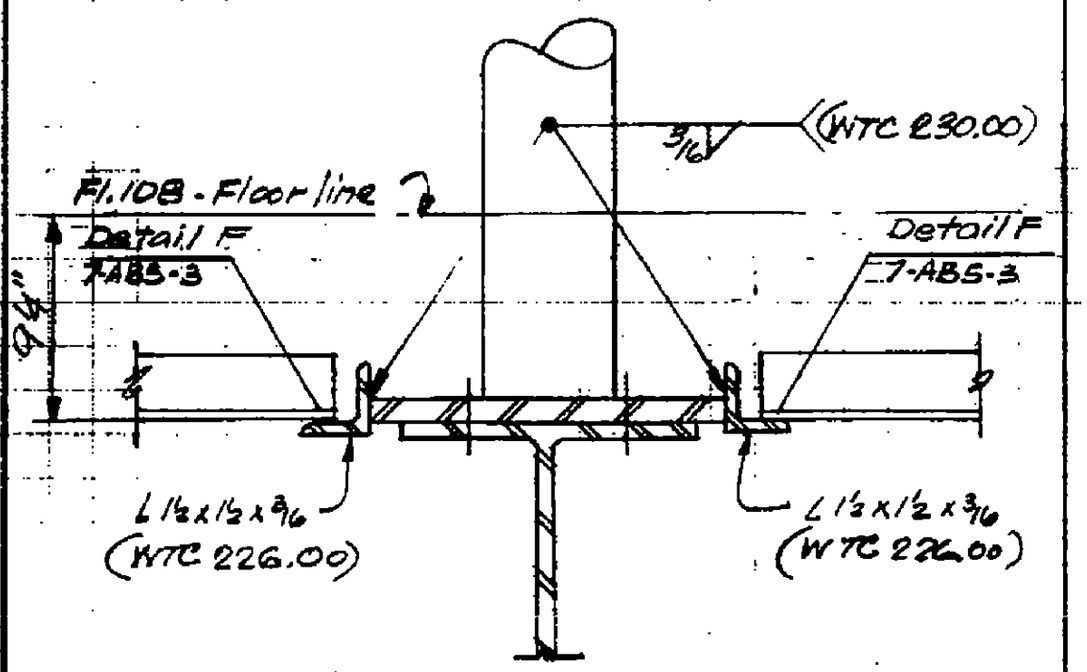

Section G-G

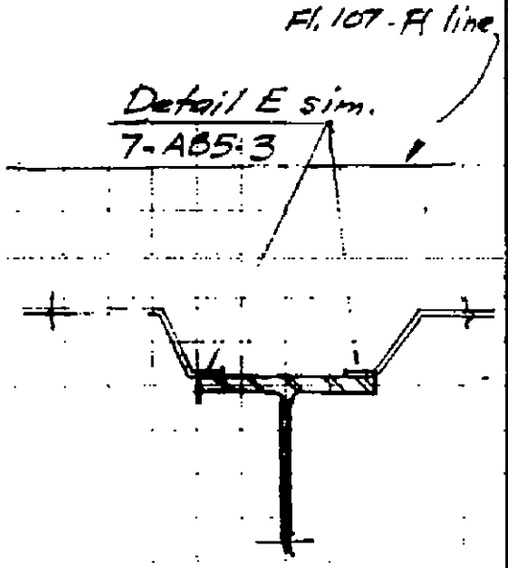

Section H-H

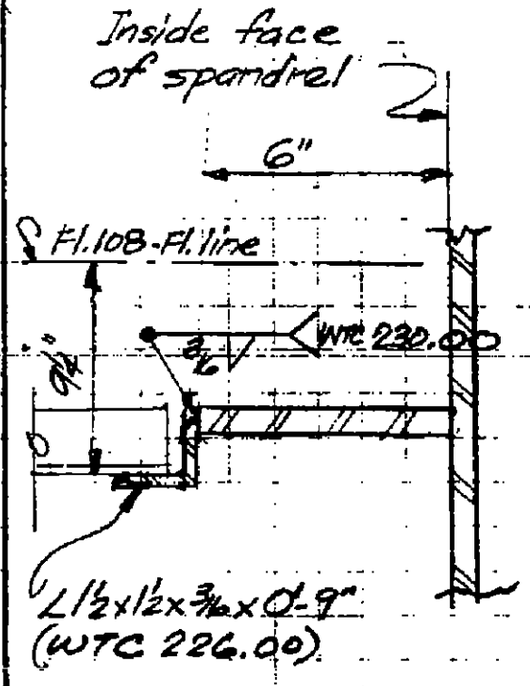

Section K-K

LICENSED PROFESSIONAL ENGINEER
LESLIE E. ROBERTSON
No. 34360
UNIVERSITY OF THE STATE OF NEW YORK

R

DESIGNED

DRAWN P. Oaks

REVIEWED

7-AB5-22

SKILLING, HELLE, CHRISTIANSEN, ROBERTSON — Structural & Civil Engineers

PROJECT: THE WORLD TRADE CENTER | TITLE: FLOOR TRUSS CONNECTION DETAIL | DATE: 5-29-69

REVISIONS

Note:
Top chords of adjacent panels to be aligned vert. before welding

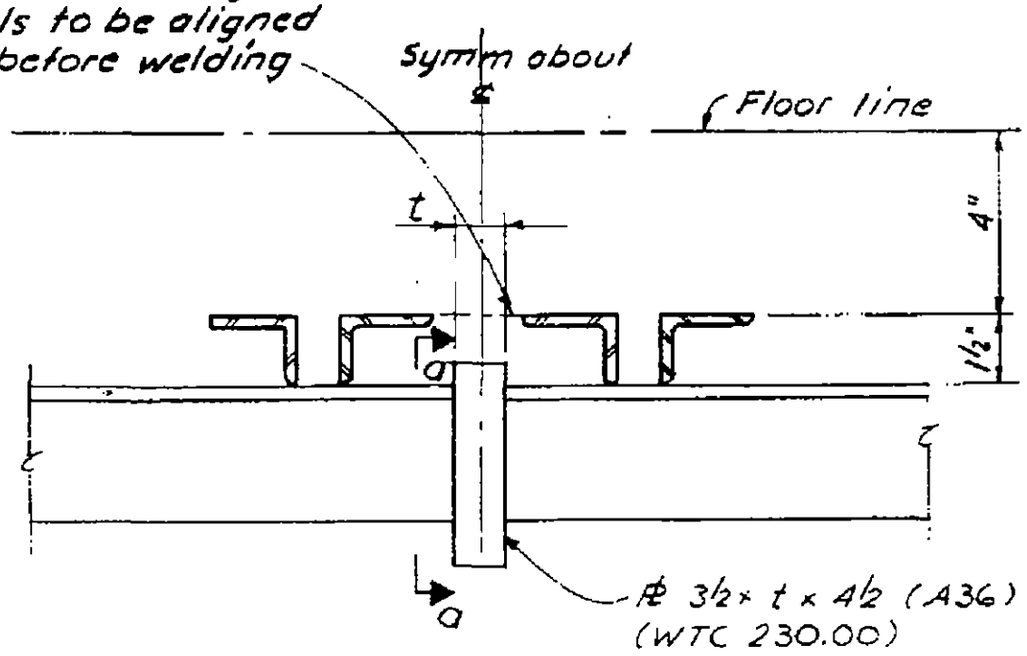

Conn Detail 2-c
Option

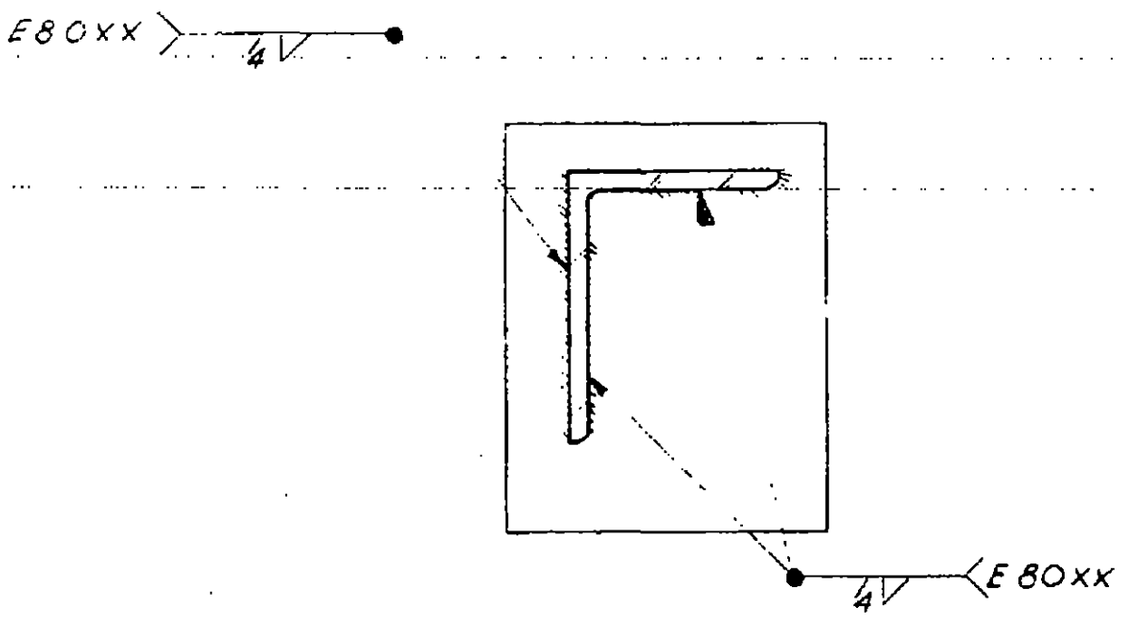

Section a-a

Note:
"t" to be determined from field measurements.
(t. 1" ±)

LICENSED PROFESSIONAL ENGINEER
LESLIE E. ROBERTSON
No. 34960
CITY OF THE STATE OF NEW YORK

SIGNED H. Roet
DRAWN F. Smith
REVIEWED

2-C/1

SKILLING, HELLE, CHRISTIANSEN, ROBERTSON — Structural & Civil Engineers

PROJECT THE WORLD TRADE CENTER | TITLE FLOOR TRUSS CONNECTION DETAIL | DATE 5-29-69

REVISIONS
1/3/69

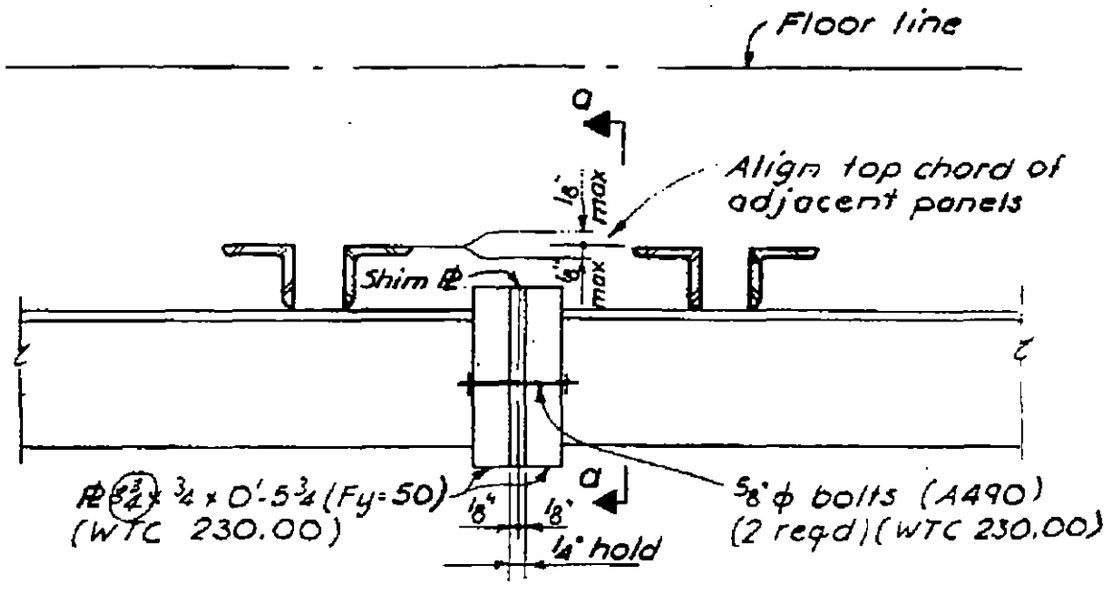

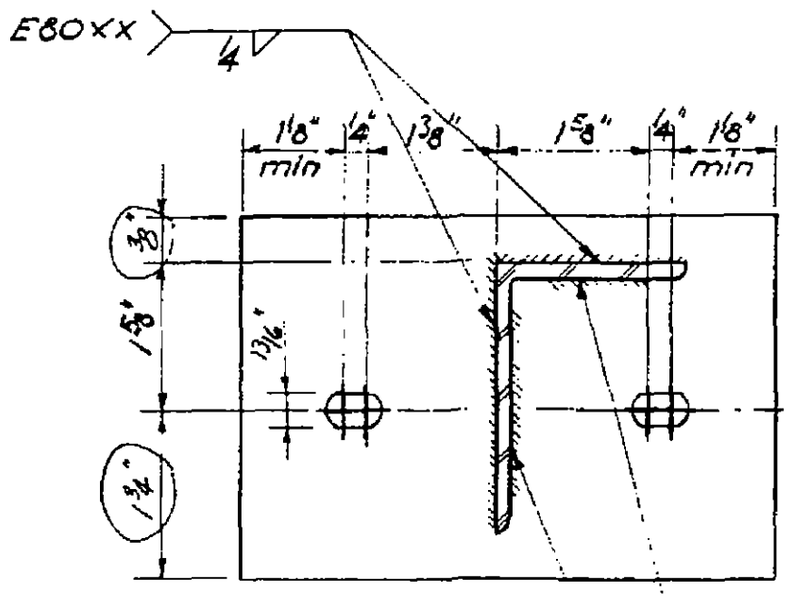

Conn Detail 2-c

Field bolted option

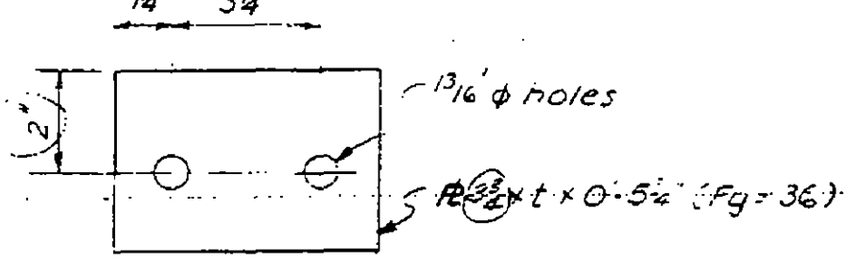

Typ Shim Stock

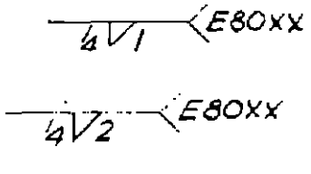

Section a-a

Notes:

1. Provide hardened washers under both bolt head and nut.
2. Provide shim stock in both 3/16" and 1/8" nominal sizes.

CHKD
DRAWN F. Smith
REVIEWED

2-c/2